3.3 VOLT CMOS SuperSync FIFO™
8,192 x 18
16,384 x 18

IDT72V255LA
IDT72V265LA

LEAD FINISH (SnPb) ARE IN EOL PROCESS - LAST TIME BUY EXPIRES JUNE 15, 2018

FEATURES:

- **Choose among the following memory organizations:**
  - **IDT72V255LA 8,192 x 18**
  - **IDT72V265LA 16,384 x 18**
- **Pin-compatible with the IDT72V275/72V285 and IDT72V295/72V2105 SuperSync FIFOs**
- **Functionally compatible with the 5 Volt IDT72255/72265 family**
- **10ns read/write cycle time (6.5ns access time)**
- **Fixed, low first word data latency time**
- **5V input tolerant**
- **Auto power down minimizes standby power consumption**
- **Master Reset clears entire FIFO**
- **Partial Reset clears data, but retains programmable settings**
- **Retransmit operation with fixed, low first word data latency time**
- **Empty, Full and Half-Full flags signal FIFO status**
- **Programmable Almost-Empty and Almost-Full flags, each flag can default to one of two preselected offsets**
- **Program partial flags by either serial or parallel means**
- **Select IDT Standard timing (using $\overline{EF}$ and $\overline{FF}$ flags) or First Word Fall Through timing (using $\overline{OR}$ and $\overline{IR}$ flags)**
- **Output enable puts data outputs into high impedance state**
- **Easily expandable in depth and width**
- **Independent Read and Write clocks (permit reading and writing simultaneously)**
- **Available in the 64-pin Thin Quad Flat Pack (TQFP) and the 64-pin Slim Thin Quad Flat Pack (STQFP)**
- **High-performance submicron CMOS technology**
- **Industrial temperature range (–40°C to +85°C) is available**
- **Green parts available, see ordering information**

DESCRIPTION:

The IDT72V255LA/72V265LA are functionally compatible versions of the IDT72255/72265 designed to run off a 3.3V supply for very low power consumption. The IDT72V255LA/72V265LA are exceptionally deep, high speed, CMOS First-In-First-Out (FIFO) memories with clocked read and write controls. These FIFOs offer numerous improvements over previous SuperSync FIFOs, including the following:

- The limitation of the frequency of one clock input with respect to the other has been removed. The Frequency Select pin (FS) has been removed, thus it is no longer necessary to select which of the two clock inputs, RCLK or WCLK, is running at the higher frequency.

FUNCTIONAL BLOCK DIAGRAM

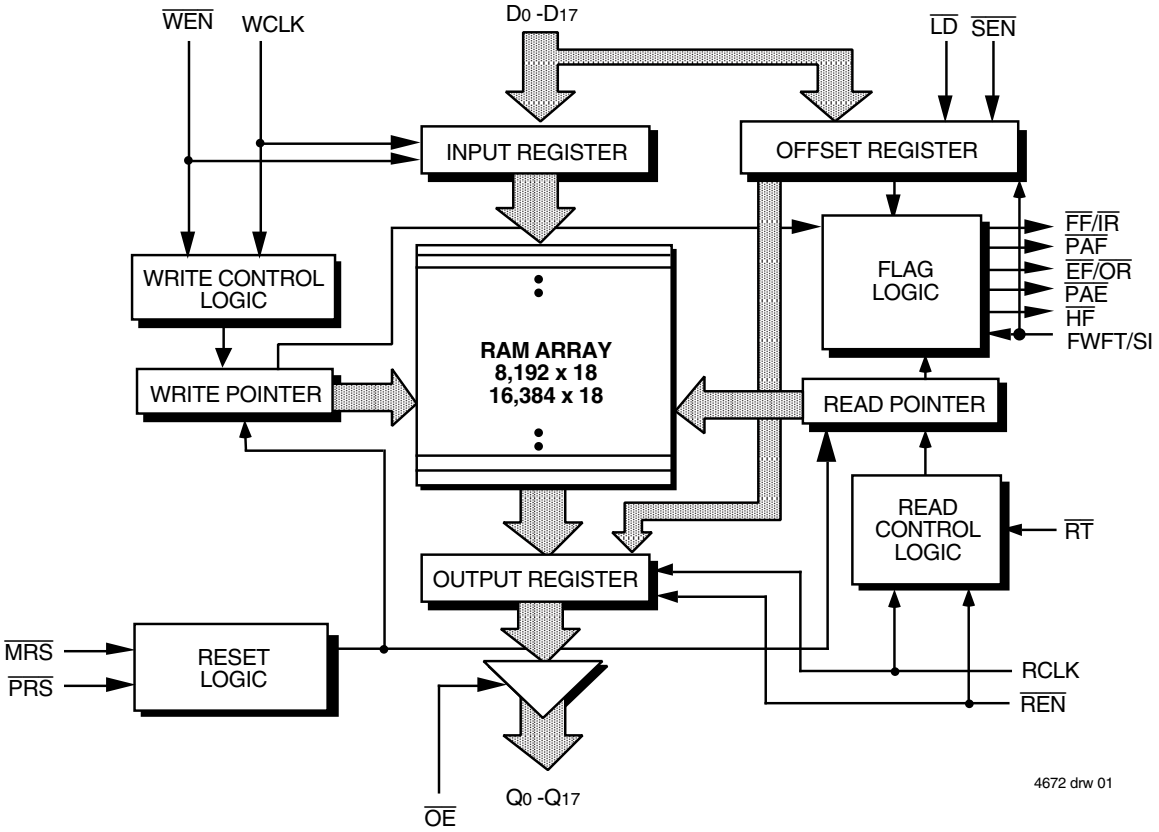

IDT and the IDT logo are registered trademarks of Integrated Device Technology, Inc and the SuperSyncFIFO is a trademark of Integrated Device Technology, Inc.

©2018 Integrated Device Technology, Inc. All rights reserved. Product specifications subject to change without notice.

DESCRIPTION (CONTINUED)

- The period required by the retransmit operation is now fixed and short.
- The first word data latency period, from the time the first word is written to an empty FIFO to the time it can be read, is now fixed and short. (The variable clock cycle counting delay associated with the latency period found on previous SuperSync devices has been eliminated on this SuperSync family.)

SuperSync FIFOs are particularly appropriate for networking, video, telecommunications, data communications and other applications that need to buffer large amounts of data.

The input port is controlled by a Write Clock (WCLK) input and a Write Enable ($\overline{WEN}$) input. Data is written into the FIFO on every rising edge of WCLK when $\overline{WEN}$ is asserted. The output port is controlled by a Read Clock (RCLK) input and Read Enable ($\overline{REN}$) input. Data is read from the FIFO on every rising edge of RCLK when $\overline{REN}$ is asserted. An Output Enable ($\overline{OE}$) input is provided for three-state control of the outputs.

The frequencies of both the RCLK and the WCLK signals may vary from 0 to fMAX with complete independence. There are no restrictions on the frequency of one clock input with respect to the other.

PIN CONFIGURATIONS

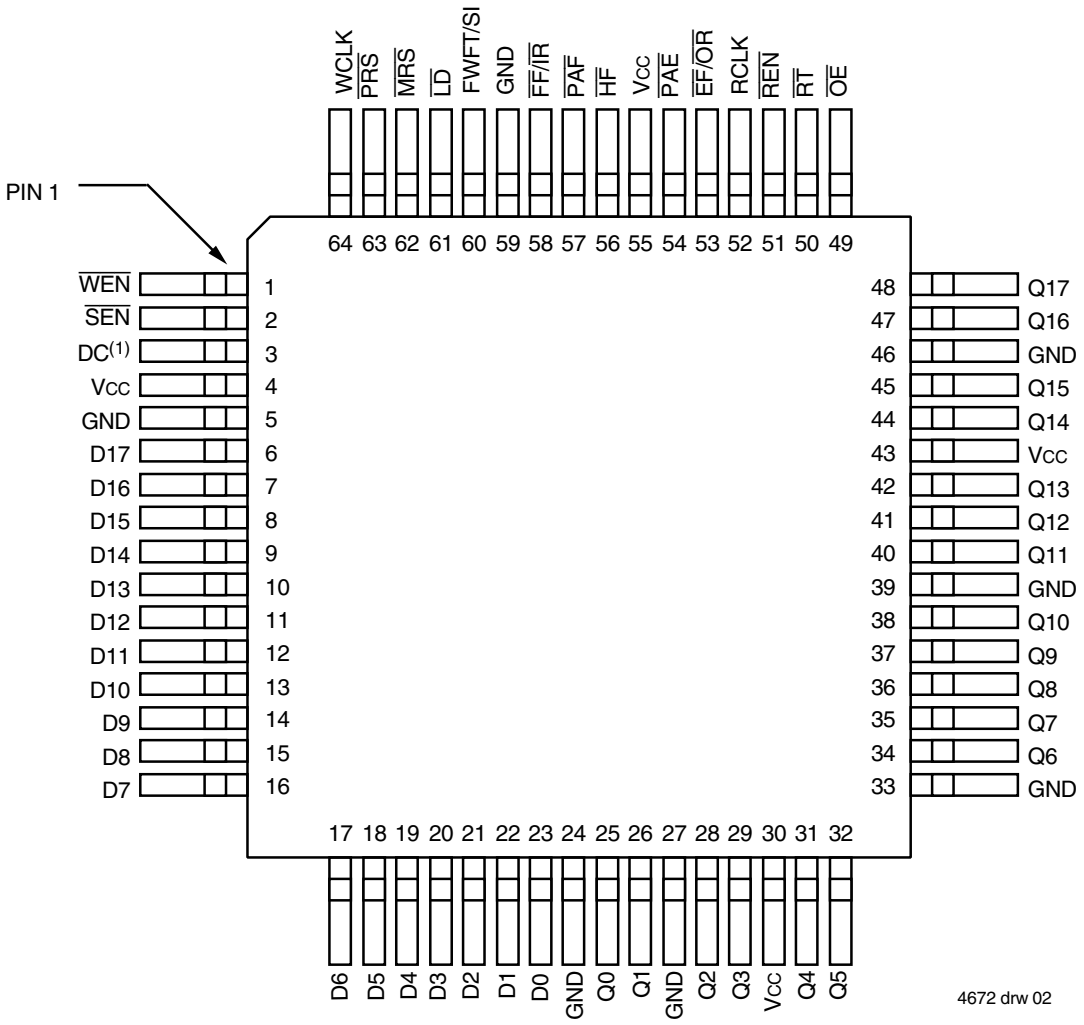

TQFP (PN64, ORDER CODE: PF)
STQFP (PP64, ORDER CODE: TF)
TOP VIEW

NOTE:
1. DC = Don't Care. Must be tied to GND or VCC, cannot be left open.

DESCRIPTION (CONTINUED)

There are two possible timing modes of operation with these devices: IDT Standard mode and First Word Fall Through (FWFT) mode.

In *IDT Standard mode,* the first word written to an empty FIFO will not appear on the data output lines unless a specific read operation is performed. A read operation, which consists of activating $\overline{REN}$ and enabling a rising RCLK edge, will shift the word from internal memory to the data output lines.

In *FWFT mode,* the first word written to an empty FIFO is clocked directly to the data output lines after three transitions of the RCLK signal. A $\overline{REN}$ does not have to be asserted for accessing the first word. However, subsequent words written to the FIFO do require a LOW on $\overline{REN}$ for access. The state of the FWFT/SI input during Master Reset determines the timing mode in use.

For applications requiring more data storage capacity than a single FIFO can provide, the FWFT timing mode permits depth expansion by chaining FIFOs in series (i.e. the data outputs of one FIFO are connected to the corresponding data inputs of the next). No external logic is required.

These FIFOs have five flag pins, $\overline{EF}$/$\overline{OR}$ (Empty Flag or Output Ready), $\overline{FF}$/$\overline{IR}$ (Full Flag or Input Ready), $\overline{HF}$ (Half-full Flag), $\overline{PAE}$ (Programmable Almost-Empty flag) and $\overline{PAF}$ (Programmable Almost-Full flag). The $\overline{EF}$ and $\overline{FF}$ functions are selected in IDT Standard mode. The $\overline{IR}$ and $\overline{OR}$ functions are selected in FWFT mode. $\overline{HF}$, $\overline{PAE}$ and $\overline{PAF}$ are always available for use, irrespective of timing mode.

$\overline{PAE}$ and $\overline{PAF}$ can be programmed independently to switch at any point in memory. (See Table I and Table II.) Programmable offsets determine the flag switching threshold and can be loaded by two methods: parallel or serial. Two default offset settings are also provided, so that $\overline{PAE}$ can be set to switch at 127 or 1,023 locations from the empty boundary and the $\overline{PAF}$ threshold can be set at 127 or 1,023 locations from the full boundary. These choices are made with the $\overline{LD}$ pin during Master Reset.

For serial programming, $\overline{SEN}$ together with $\overline{LD}$ on each rising edge of WCLK, are used to load the offset registers via the Serial Input (SI). For parallel programming, $\overline{WEN}$ together with $\overline{LD}$ on each rising edge of WCLK, are used to load the offset registers via Dn. $\overline{REN}$ together with $\overline{LD}$ on each rising edge of RCLK can be used to read the offsets in parallel from Qn regardless of whether serial or parallel offset loading has been selected.

During Master Reset ($\overline{MRS}$) the following events occur: The read and write pointers are set to the first location of the FIFO. The FWFT pin selects IDT Standard mode or FWFT mode. The $\overline{LD}$ pin selects either a partial flag default setting of 127 with parallel programming or a partial flag default setting of 1,023 with serial programming. The flags are updated according to the timing mode and default offsets selected.

The Partial Reset ($\overline{PRS}$) also sets the read and write pointers to the first location of the memory. However, the timing mode, partial flag programming method, and default or programmed offset settings existing before Partial Reset remain unchanged. The flags are updated according to the timing mode and offsets in effect. $\overline{PRS}$ is useful for resetting a device in mid-operation, when reprogramming partial flags would be undesirable.

The Retransmit function allows data to be reread from the FIFO more than once. A LOW on the $\overline{RT}$ input during a rising RCLK edge initiates a retransmit operation by setting the read pointer to the first location of the memory array.

If, at any time, the FIFO is not actively performing an operation, the chip will automatically power down. Once in the power down state, the standby supply current consumption is minimized. Initiating any operation (by activating control inputs) will immediately take the device out of the power down state.

The IDT72V255LA/72V265LA are fabricated using IDT's high speed submicron CMOS technology.

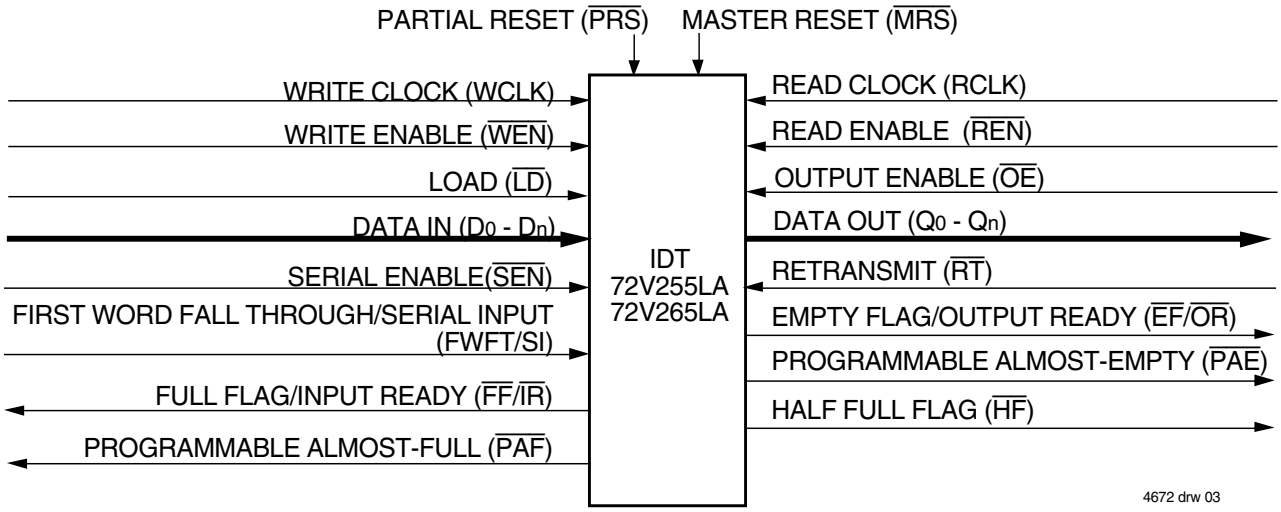

Figure 1. Block Diagram of Single 8,192 x 18 and 16,384 x 18 Synchronous FIFO

PIN DESCRIPTION

Symbol	Name	I/O	Description
D_0–D_{17}	Data Inputs	I	Data inputs for a 18-bit bus.
$\overline{MRS}$	Master Reset	I	$\overline{MRS}$ initializes the read and write pointers to zero and sets the output register to all zeroes. During Master Reset, the FIFO is configured for either FWFT or IDT Standard mode, one of two program mable flag default settings, and serial or parallel programming of the offset settings.
$\overline{PRS}$	Partial Reset	I	$\overline{PRS}$ initializes the read and write pointers to zero and sets the output register to all zeroes. During Partial Reset, the existing mode (IDT or FWFT), programming method (serial or parallel), and programmable flag settings are all retained.
$\overline{RT}$	Retransmit	I	$\overline{RT}$ asserted on the rising edge of RCLK initializes the READ pointer to zero, sets the $\overline{EF}$ flag to LOW ($\overline{OR}$ to HIGH in FWFT mode) temporarily and does not disturb the write pointer, programming method, existing timing mode or programmable flag settings. $\overline{RT}$ is useful to reread data from the first physical location of the FIFO.
FWFT/SI	First Word Fall Through/Serial In	I	During Master Reset, selects First Word Fall Through or IDT Standard mode. After Master Reset, this pin functions as a serial input for loading offset registers
WCLK	Write Clock	I	When enabled by $\overline{WEN}$, the rising edge of WCLK writes data into the FIFO and offsets into the programmable registers for parallel programming, and when enabled by $\overline{SEN}$, the rising edge of WCLK writes one bit of data into the programmable register for serial programming.
$\overline{WEN}$	Write Enable	I	$\overline{WEN}$ enables WCLK for writing data into the FIFO memory and offset registers.
RCLK	Read Clock	I	When enabled by $\overline{REN}$, the rising edge of RCLK reads data from the FIFO memory and offsetsfrom the programmable registers.
$\overline{REN}$	Read Enable	I	$\overline{REN}$ enables RCLK for reading data from the FIFO memory and offset registers.
$\overline{OE}$	Output Enable	I	$\overline{OE}$ controls the output impedance of Q_n.
$\overline{SEN}$	Serial Enable	I	$\overline{SEN}$ enables serial loading of programmable flag offsets.
$\overline{LD}$	Load	I	During Master Reset, $\overline{LD}$ selects one of two partial flag default offsets (127 or 1,023) and determines the flag offset programming method, serial or parallel. After Master Reset, this pin enables writing to and reading from the offset registers.
DC	Don't Care	I	This pin must be tied to either V_{CC} or GND and must not toggle after Master Reset.
$\overline{FF}$/$\overline{IR}$	Full Flag/ Input Ready	O	In the IDT Standard mode, the $\overline{FF}$ function is selected. $\overline{FF}$ indicates whether or not the FIFO memory is full. In the FWFT mode, the $\overline{IR}$ function is selected. $\overline{IR}$ indicates whether or not there is space available for writing to the FIFO memory.
$\overline{EF}$/$\overline{OR}$	Empty Flag/ Output Ready	O	In the IDT Standard mode, the $\overline{EF}$ function is selected. $\overline{EF}$ indicates whether or not the FIFO memory is empty. In FWFT mode, the $\overline{OR}$ function is selected. $\overline{OR}$ indicates whether or not there is valid data available at the outputs.
$\overline{PAF}$	Programmable Almost-Full Flag	O	$\overline{PAF}$ goes LOW if the number of words in the FIFO memory is more than total word capacity of the FIFO minus the full offset value m, which is stored in the Full Offset register. There are two possible default values for m: 127 or 1,023.
$\overline{PAE}$	Programmable Almost-Empty Flag	O	$\overline{PAE}$ goes LOW if the number of words in the FIFO memory is less than offset n, which is stored in the Empty Offset register. There are two possible default values for n: 127 or 1,023. Other values for n can be programmed into the device.
$\overline{HF}$	Half-Full Flag	O	$\overline{HF}$ indicates whether the FIFO memory is more or less than half-full.
Q_0–Q_{17}	Data Outputs	O	Data outputs for an 18-bit bus.
V_{CC}	Power		+3.3 Volt power supply pins.
GND	Ground		Ground pins.

ABSOLUTE MAXIMUM RATINGS

Symbol	Rating	Com'l & Ind'l	Unit
V_{TERM}	Terminal Voltage with respect to GND	–0.5 to +5	V
T_{STG}	Storage Temperature	–55 to +125	°C
I_{OUT}	DC Output Current	–50 to +50	mA

NOTE:
1. Stresses greater than those listed under ABSOLUTE MAXIMUM RATINGS may cause permanent damage to the device. This is a stress rating only and functional operation of the device at these or any other conditions above those indicated in the operational sections of this specification is not implied. Exposure to absolute maximum rating conditions for extended periods may affect reliability.

RECOMMENDED DC OPERATING CONDITIONS

Symbol	Parameter	Min.	Typ.	Max.	Unit
V_{CC}	Supply Voltage (Com'l/Ind'l)	3.0	3.3	3.6	V
GND	Supply Voltage (Com'l/Ind'l)	0	0	0	V
V_{IH}	Input High Voltage (Com'l/Ind'l)	2.0	—	5.0	V
V_{IL}(1)	Input Low Voltage (Com'l/Ind'l)	—	—	0.8	V
T_A	Operating Temperature Commercial	0	—	+70	°C
T_A	Operating Temperature Industrial	-40	—	+85	°C

NOTE:
1. 1.5V undershoots are allowed for 10ns once per cycle.

DC ELECTRICAL CHARACTERISTICS

(Commercial: V_{CC} = 3.3V ± 0.3V, T_A = 0°C to +70°C; Industrial: V_{CC} = 3.3V ± 0.3V, T_A = -40°C to +85°C)

Symbol	Parameter	IDT72V255LA IDT72V265LA Commercial & Industrial(1) t_{CLK} = 10, 15, 20 ns		Unit
		Min.	Max.	
I_{LI}(2)	Input Leakage Current	–1	1	µA
I_{LO}(3)	Output Leakage Current	–10	10	µA
V_{OH}	Output Logic "1" Voltage, I_{OH} = –2 mA	2.4	—	V
V_{OL}	Output Logic "0" Voltage, I_{OL} = 8 mA	—	0.4	V
I_{CC1}(4,5,6)	Active Power Supply Current	—	55	mA
I_{CC2}(4,7)	Standby Current	—	20	mA

NOTES:
1. Industrial temperature range product for 15ns speed grade is available as a standard device.
2. Measurements with $0.4 \le V_{IN} \le V_{CC}$.
3. $\overline{OE} \ge V_{IH}$, $0.4 \le V_{OUT} \le V_{CC}$.
4. Tested with outputs disabled (I_{OUT} = 0).
5. RCLK and WCLK toggle at 20 MHz and data inputs switch at 10 MHz.
6. Typical I_{CC1} = 10 + 1.1*fs + 0.02*C_L*fs (in mA) with V_{CC} = 3.3V, T_A = 25°C, fs = WCLK frequency = RCLK frequency (in MHz, using TTL levels), data switching at fs/2, C_L = capacitive load (in pF).
7. All Inputs = V_{CC} –0.2V or GND + 0.2V, except RCLK and WCLK, which toggle at 20 MHz.

CAPACITANCE

(T_A = +25°C, f = 1.0MHz)

Symbol	Parameter(1)	Conditions	Max.	Unit
C_{IN}(2)	Input Capacitance	V_{IN} = 0V	10	pF
C_{OUT}(1,2)	Output Capacitance	V_{OUT} = 0V	10	pF

NOTES:
1. With output deselected, ($\overline{OE} \ge V_{IH}$).
2. Characterized values, not currently tested.

AC ELECTRICAL CHARACTERISTICS[1]

(Commercial: V_{CC} = 3.3V ± 0.3V, T_A = 0°C to +70°C; Industrial: V_{CC} 3.3V ± 0.3V, T_A = -40°C to +85°C)

		Commercial		Com'l & Ind'l[2]		Commercial		
		IDT72V255LA10 IDT72V265LA10		IDT72V255LA15 IDT72V265LA15		IDT72V255LA20 IDT72V265LA20		
Symbol	**Parameter**	**Min.**	**Max.**	**Min.**	**Max.**	**Min.**	**Max.**	**Unit**
f_S	Clock Cycle Frequency	—	100	—	66.7	—	50	MHz
t_A	Data Access Time	2	6.5	2	10	2	12	ns
t_{CLK}	Clock Cycle Time	10	—	15	—	20	—	ns
t_{CLKH}	Clock High Time	4.5	—	6	—	8	—	ns
t_{CLKL}	Clock Low Time	4.5	—	6	—	8	—	ns
t_{DS}	Data Setup Time	3	—	4	—	5	—	ns
t_{DH}	Data Hold Time	0.5	—	1	—	1	—	ns
t_{ENS}	Enable Setup Time	3	—	4	—	5	—	ns
t_{ENH}	Enable Hold Time	0.5	—	1	—	1	—	ns
t_{LDS}	Load Setup Time	3	—	4	—	5	—	ns
t_{LDH}	Load Hold Time	0.5	—	1	—	1	—	ns
t_{RS}	Reset Pulse Width[3]	10	—	15	—	20	—	ns
t_{RSS}	Reset Setup Time	10	—	15	—	20	—	ns
t_{RSR}	Reset Recovery Time	10	—	15	—	20	—	ns
t_{RSF}	Reset to Flag and Output Time	—	10	—	15	—	20	ns
t_{FWFT}	Mode Select Time	0	—	0	—	0	—	ns
t_{RTS}	Retransmit Setup Time	3	—	4	—	5	—	ns
t_{OLZ}	Output Enable to Output in Low Z[4]	0	—	0	—	0	—	ns
t_{OE}	Output Enable to Output Valid	2	6	3	8	3	10	ns
t_{OHZ}	Output Enable to Output in High Z[4]	2	6	3	8	3	10	ns
t_{WFF}	Write Clock to $\overline{FF}$ or $\overline{IR}$	—	6.5	—	10	—	12	ns
t_{REF}	Read Clock to $\overline{EF}$ or $\overline{OR}$	—	6.5	—	10	—	12	ns
t_{PAF}	Write Clock to $\overline{PAF}$	—	6.5	—	10	—	12	ns
t_{PAE}	Read Clock to $\overline{PAE}$	—	6.5	—	10	—	12	ns
t_{HF}	Clock to $\overline{HF}$	—	16	—	20	—	22	ns
t_{SKEW1}	Skew time between RCLK and WCLK for $\overline{FF}$/$\overline{IR}$	5	—	6	—	10	—	ns
t_{SKEW2}	Skew time between RCLK and WCLK for $\overline{PAE}$ and $\overline{PAF}$	12	—	15	—	20	—	ns
t_{SKEW3}	Skew time between RCLK and WCLK for $\overline{EF}$/$\overline{OR}$	60	—	60	—	60	—	ns
t_{SKEW4}	Skew time between RCLK and WCLK for $\overline{PAE}$ and $\overline{PAF}$ for Re-transmit operation	15	—	17	—	25	—	ns

NOTES:
1. All AC timings apply to both Standard IDT mode and First Word Fall Through mode.
2. Industrial temperature range product for 15ns speed grade is available as a standard device.
3. Pulse widths less than minimum values are not allowed.
4. Values guaranteed by design, not currently tested.

AC TEST CONDITIONS

Input Pulse Levels	GND to 3.0V
Input Rise/Fall Times	3ns
Input Timing Reference Levels	1.5V
Output Reference Levels	1.5V
Output Load	See Figure 2

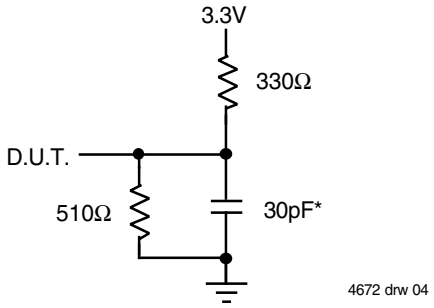

Figure 2. Output Load

* Includes jig and scope capacitances.

FUNCTIONAL DESCRIPTION

TIMING MODES: IDT STANDARD vs FIRST WORD FALL THROUGH (FWFT) MODE

The IDT72V255LA/72V265LA support two different timing modes of operation: IDT Standard mode or First Word Fall Through (FWFT) mode. The selection of which mode will operate is determined during Master Reset, by the state of the FWFT/SI input.

If, at the time of Master Reset, FWFT/SI is LOW, then IDT Standard mode will be selected. This mode uses the Empty Flag ($\overline{EF}$) to indicate whether or not there are any words present in the FIFO. It also uses the Full Flag function ($\overline{FF}$) to indicate whether or not the FIFO has any free space for writing. In IDT Standard mode, every word read from the FIFO, including the first, must be requested using the Read Enable ($\overline{REN}$) and RCLK.

If, at the time of Master Reset, FWFT/SI is HIGH, then FWFT mode will be selected. This mode uses Output Ready ($\overline{OR}$) to indicate whether or not there is valid data at the data outputs (Qn). It also uses Input Ready ($\overline{IR}$) to indicate whether or not the FIFO has any free space for writing. In the FWFT mode, the first word written to an empty FIFO goes directly to Qn after three RCLK rising edges, $\overline{REN}$ = LOW is not necessary. Subsequent words must be accessed using the Read Enable ($\overline{REN}$) and RCLK.

Various signals, both input and output signals operate differently depending on which timing mode is in effect.

IDT STANDARD MODE

In this mode, the status flags, $\overline{FF}$, $\overline{PAF}$, $\overline{HF}$, $\overline{PAE}$, and $\overline{EF}$ operate in the manner outlined in Table 1. To write data into to the FIFO, Write Enable ($\overline{WEN}$) must be LOW. Data presented to the DATA IN lines will be clocked into the FIFO on subsequent transitions of the Write Clock (WCLK). After the first write is performed, the Empty Flag ($\overline{EF}$) will go HIGH. Subsequent writes will continue to fill up the FIFO. The Programmable Almost-Empty flag ($\overline{PAE}$) will go HIGH after n + 1 words have been loaded into the FIFO, where n is the empty offset value. The default setting for this value is stated in the footnote of Table 1. This parameter is also user programmable. See section on Programmable Flag Offset Loading.

If one continued to write data into the FIFO, and we assumed no read operations were taking place, the Half-Full flag ($\overline{HF}$) would toggle to LOW once the 4,097th word for IDT72V255LA and 8,193th word for IDT72V265LA respectively was written into the FIFO. Continuing to write data into the FIFO will cause the Programmable Almost-Full flag ($\overline{PAF}$) to go LOW. Again, if no reads are performed, the $\overline{PAF}$ will go LOW after (8,192-m) writes for the IDT72V255LA and (16,384-m) writes for the IDT72V265LA. The offset “m” is the full offset value. The default setting for this value is stated in the footnote of Table 1. This parameter is also user programmable. See section on Programmable Flag Offset Loading.

When the FIFO is full, the Full Flag ($\overline{FF}$) will go LOW, inhibiting further write operations. If no reads are performed after a reset, $\overline{FF}$ will go LOW after D writes to the FIFO. D = 8,192 writes for the IDT72V255LA and 16,384 for the IDT72V265LA, respectively.

If the FIFO is full, the first read operation will cause $\overline{FF}$ to go HIGH. Subsequent read operations will cause $\overline{PAF}$ and $\overline{HF}$ to go HIGH at the conditions described in Table 1. If further read operations occur, without write operations, $\overline{PAE}$ will go LOW when there are n words in the FIFO, where n is the empty offset value. Continuing read operations will cause the FIFO to become empty. When the last word has been read from the FIFO, the $\overline{EF}$ will go LOW inhibiting further read operations. $\overline{REN}$ is ignored when the FIFO is empty.

When configured in IDT Standard mode, the $\overline{EF}$ and $\overline{FF}$ outputs are double register-buffered outputs.

Relevant timing diagrams for IDT Standard mode can be found in Figure 7, 8 and 11.

FIRST WORD FALL THROUGH MODE (FWFT)

In this mode, the status flags, $\overline{IR}$, $\overline{PAF}$, $\overline{HF}$, $\overline{PAE}$, and $\overline{OR}$ operate in the manner outlined in Table 2. To write data into to the FIFO, $\overline{WEN}$ must be LOW. Data presented to the DATA IN lines will be clocked into the FIFO on subsequent transitions of WCLK. After the first write is performed, the Output Ready ($\overline{OR}$) flag will go LOW. Subsequent writes will continue to fill up the FIFO. $\overline{PAE}$ will go HIGH after n + 2 words have been loaded into the FIFO, where n is the empty offset value. The default setting for this value is stated in the footnote of Table 2. This parameter is also user programmable. See section on Programmable Flag Offset Loading.

If one continued to write data into the FIFO, and we assumed no read operations were taking place, the $\overline{HF}$ would toggle to LOW once the 4,098th word for the IDT72V255LA and 8,194th word for the IDT72V265LA, respectively was written into the FIFO. Continuing to write data into the FIFO will cause the $\overline{PAF}$ to go LOW. Again, if no reads are performed, the $\overline{PAF}$ will go LOW after (8,193-m) writes for the IDT72V255LA and (16,385-m) writes for the IDT72V265LA, where m is the full offset value. The default setting for this value is stated in the footnote of Table 2.

When the FIFO is full, the Input Ready ($\overline{IR}$) flag will go HIGH, inhibiting further write operations. If no reads are performed after a reset, $\overline{IR}$ will go HIGH after D writes to the FIFO. D = 8,193 writes for the IDT72V255LA and 16,385 writes for the IDT72V265LA, respectively. Note that the additional word in FWFT mode is due to the capacity of the memory plus output register.

If the FIFO is full, the first read operation will cause the $\overline{IR}$ flag to go LOW. Subsequent read operations will cause the $\overline{PAF}$ and $\overline{HF}$ to go HIGH at the conditions described in Table 2. If further read operations occur, without write operations, the $\overline{PAE}$ will go LOW when there are n + 1 words in the FIFO, where n is the empty offset value. Continuing read operations will cause the FIFO to become empty. When the last word has been read from the FIFO, $\overline{OR}$ will go HIGH inhibiting further read operations. $\overline{REN}$ is ignored when the FIFO is empty.

When configured in FWFT mode, the $\overline{OR}$ flag output is triple register-buffered, and the $\overline{IR}$ flag output is double register-buffered.

Relevant timing diagrams for FWFT mode can be found in Figure 9, 10 and 12.

PROGRAMMING FLAG OFFSETS

Full and Empty Flag offset values are user programmable. The IDT72V255LA/72V265LA has internal registers for these offsets. Default settings are stated in the footnotes of Table 1 and Table 2. Offset values can be programmed into the FIFO in one of two ways; serial or parallel loading method. The selection of the loading method is done using the $\overline{LD}$ (Load) pin. During Master Reset, the state of the $\overline{LD}$ input determines whether serial or parallel flag offset programming is enabled. A HIGH on $\overline{LD}$ during Master Reset selects serial loading of offset values and in addition, sets a default $\overline{PAE}$ offset value of 3FFH (a threshold 1,023 words from the empty boundary), and a default $\overline{PAF}$ offset value of 3FFH (a threshold 1,023 words from the full boundary). A LOW on $\overline{LD}$ during Master Reset selects parallel loading of offset values, and in addition, sets a default $\overline{PAE}$ offset value of 07FH (a threshold 127 words from the empty boundary), and a default $\overline{PAF}$ offset value of 07FH (a threshold 127 words from the full boundary). See Figure 3, *Offset Register Location and Default Values*.

In addition to loading offset values into the FIFO, it also possible to read the current offset values. It is only possible to read offset values via parallel read.

Figure 4, *Programmable Flag Offset Programming Sequence*, summarizes the control pins and sequence for both serial and parallel programming modes. For a more detailed description, see discussion that follows.

The offset registers may be programmed (and reprogrammed) any time after Master Reset, regardless of whether serial or parallel programming has been selected.

TABLE 1 — STATUS FLAGS FOR IDT STANDARD MODE

	72V255LA	72V265LA	$\overline{FF}$	$\overline{PAF}$	$\overline{HF}$	$\overline{PAE}$	$\overline{EF}$
Number of Words in FIFO	0	0	H	H	H	L	L
	1 to n [1]	1 to n [1]	H	H	H	L	H
	(n + 1) to 4,096	(n + 1) to 8,192	H	H	H	H	H
	4,097 to (8,192–(m+1))	8,193 to (16,384–(m+1))	H	H	L	H	H
	(8,192–m)[2] to 8,191	(16,384–m) [2] to 16,383	H	L	L	H	H
	8,192	16,384	L	L	L	H	H

NOTES:
1. n = Empty Offset, Default Values: n = 127 when parallel offset loading is selected or n = 1,023 when serial offset loading is selected.
2. m = Full Offset, Default Values: m = 127 when parallel offset loading is selected or m = 1,023 when serial offset loading is selected.

TABLE 2 — STATUS FLAGS FOR FWFT MODE

	72V255LA	72V265LA	$\overline{FF}$	$\overline{PAF}$	$\overline{HF}$	$\overline{PAE}$	$\overline{EF}$
Number of Words in FIFO [1]	0	0	L	H	H	L	H
	1 to n+1 [1]	1 to n+1 [1]	L	H	H	L	L
	(n + 2) to 4,097	(n + 2) to 8,193	L	H	H	H	L
	4,098 to (8,193–(m+1))[2]	8,194 to (16,385–(m+1)) [2]	L	H	L	H	L
	(8,193–m) to 8,192	(16,385–m) [2] to 16,384	L	L	L	H	L
	8,193	16,385	H	L	L	H	L

NOTES:
1. n = Empty Offset, Default Values: n = 127 when parallel offset loading is selected or n = 1,023 when serial offset loading is selected.
2. m = Full Offset, Default Values: m = 127 when parallel offset loading is selected or m = 1,023 when serial offset loading is selected.

4672 drw 05

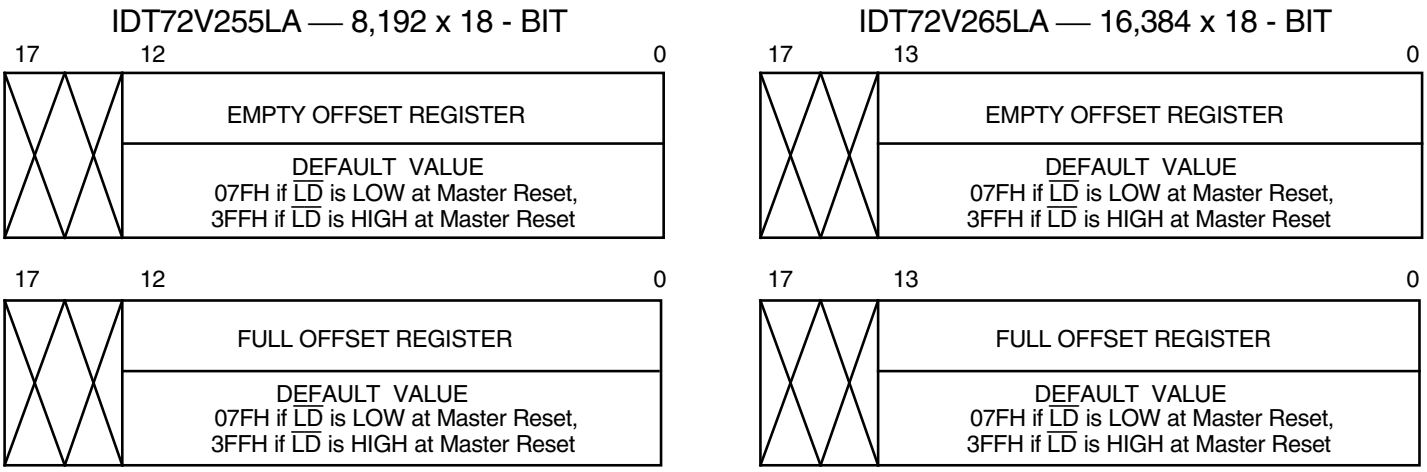

4672 drw 06

Figure 3. Offset Register Location and Default Values

$\overline{LD}$	$\overline{WEN}$	$\overline{REN}$	$\overline{SEN}$	WCLK	RCLK	Selection
0	0	1	1	↑	X	Parallel write to registers: Empty Offset Full Offset
0	1	0	1	X	↑	Parallel read from registers: Empty Offset Full Offset
0	1	1	0	↑	X	Serial shift into registers: 26 bits for the 72V255LA 28 bits for the 72V265LA 1 bit for each rising WCLK edge Starting with Empty Offset (LSB) Ending with Full Offset (MSB)
X	1	1	1	X	X	No Operation
1	0	X	X	↑	X	Write Memory
1	X	0	X	X	↑	Read Memory
1	1	1	X	X	X	No Operation

4672 drw 07

NOTES:
1. The programming method can only be selected at Master Reset.
2. Parallel reading of the offset registers is always permitted regardless of which programming method has been selected.
3. The programming sequence applies to both IDT Standard and FWFT modes.

Figure 4. Programmable Flag Offset Programming Sequence

SERIAL PROGRAMMING MODE

If Serial Programming mode has been selected, as described above, then programming of $\overline{PAE}$ and $\overline{PAF}$ values can be achieved by using a combination of the $\overline{LD}$, $\overline{SEN}$, WCLK and SI input pins. Programming $\overline{PAE}$ and $\overline{PAF}$ proceeds as follows: when $\overline{LD}$ and $\overline{SEN}$ are set LOW, data on the SI input are written, one bit for each WCLK rising edge, starting with the Empty Offset LSB and ending with the Full Offset MSB. A total of 26 bits for the IDT72V255LA and 28 bits for the IDT72V265LA. See Figure 13, *Serial Loading of Programmable Flag Registers*, for the timing diagram for this mode.

Using the serial method, individual registers cannot be programmed selectively. $\overline{PAE}$ and $\overline{PAF}$ can show a valid status only after the complete set of bits (for all offset registers) has been entered. The registers can be reprogrammed as long as the complete set of new offset bits is entered. When $\overline{LD}$ is LOW and $\overline{SEN}$ is HIGH, no serial write to the registers can occur.

Write operations to the FIFO are allowed before and during the serial programming sequence. In this case, the programming of all offset bits does not have to occur at once. A select number of bits can be written to the SI input and then, by bringing $\overline{LD}$ and $\overline{SEN}$ HIGH, data can be written to FIFO memory via Dn by toggling $\overline{WEN}$. When $\overline{WEN}$ is brought HIGH with $\overline{LD}$ and $\overline{SEN}$ restored to a LOW, the next offset bit in sequence is written to the registers via SI. If an interruption of serial programming is desired, it is sufficient either to set $\overline{LD}$ LOW and deactivate $\overline{SEN}$ or to set $\overline{SEN}$ LOW and deactivate $\overline{LD}$. Once $\overline{LD}$ and $\overline{SEN}$ are both restored to a LOW level, serial offset programming continues.

From the time serial programming has begun, neither partial flag will be valid until the full set of bits required to fill all the offset registers has been written. Measuring from the rising WCLK edge that achieves the above criteria; $\overline{PAF}$ will be valid after two more rising WCLK edges plus t_{PAF}, $\overline{PAE}$ will be valid after the next two rising RCLK edges plus t_{PAE} plus t_{SKEW2}.

It is not possible to read the flag offset values in a serial mode.

PARALLEL MODE

If Parallel Programming mode has been selected, as described above, then programming of $\overline{PAE}$ and $\overline{PAF}$ values can be achieved by using a combination of the $\overline{LD}$, WCLK , $\overline{WEN}$ and Dn input pins. Programming$\overline{PAE}$ and $\overline{PAF}$ proceeds as follows: when $\overline{LD}$ and $\overline{WEN}$ are set LOW, data on the inputs Dn are written into the Empty Offset Register on the first LOW-to-HIGH transition of WCLK. Upon the second LOW-to-HIGH transition of WCLK, data are written into the Full Offset Register. The third transition of WCLK writes, once again, to the Empty Offset Register. See Figure 14, *Parallel Loading of Programmable Flag Registers*, for the timing diagram for this mode.

The act of writing offsets in parallel employs a dedicated write offset register pointer. The act of reading offsets employs a dedicated read offset register pointer. The two pointers operate independently; however, a read and a write should not be performed simultaneously to the offset registers. A Master Reset initializes both pointers to the Empty Offset (LSB) register. A Partial Reset has no effect on the position of these pointers.

Write operations to the FIFO are allowed before and during the parallel programming sequence. In this case, the programming of all offset registers does not have to occur at one time. One, two or more offset registers can be written and then by bringing $\overline{LD}$ HIGH, write operations can be redirected to the FIFO memory. When $\overline{LD}$ is set LOW again, and $\overline{WEN}$ is LOW, the next offset register in sequence is written to. As an alternative to holding $\overline{WEN}$ LOW and toggling $\overline{LD}$, parallel programming can also be interrupted by setting LD LOW and toggling $\overline{WEN}$.

Note that the status of a partial flag ($\overline{PAE}$ or $\overline{PAF}$) output is invalid during the programming process. From the time parallel programming has begun, a partial flag output will not be valid until the appropriate offset word has been written to the register(s) pertaining to that flag. Measuring from the rising WCLK edge that achieves the above criteria; $\overline{PAF}$ will be valid after two more rising WCLK edges plus t_{PAF}, $\overline{PAE}$ will be valid after the next two rising RCLK edges plus t_{PAE} plus t_{SKEW2}.

The act of reading the offset registers employs a dedicated read offset register pointer. The contents of the offset registers can be read on the Q_0-Qn pins when $\overline{LD}$ is set LOW and $\overline{REN}$ is set LOW. Data are read via Qn from the Empty Offset Register on the first LOW-to-HIGH transition of RCLK. Upon the second LOW-to-HIGH transition of RCLK, data are read from the Full Offset Register. The third transition of RCLK reads, once again, from the Empty Offset Register. See Figure 15, *Parallel Read of Programmable Flag Registers*, for the timing diagram for this mode.

It is permissible to interrupt the offset register read sequence with reads or writes to the FIFO. The interruption is accomplished by deasserting $\overline{REN}$, $\overline{LD}$, or both together. When $\overline{REN}$ and $\overline{LD}$ are restored to a LOW level, reading of the offset registers continues where it left off. It should be noted, and care should be taken from the fact that when a parallel read of the flag offsets is performed, the data word that was present on the output lines Qn will be overwritten.

Parallel reading of the offset registers is always permitted regardless of which timing mode (IDT Standard or FWFT modes) has been selected.

RETRANSMIT OPERATION

The Retransmit operation allows data that has already been read to be accessed again. There are two stages: first, a setup procedure that resets the read pointer to the first location of memory, then the actual retransmit, which consists of reading out the memory contents, starting at the beginning of memory.

Retransmit setup is initiated by holding $\overline{RT}$ LOW during a rising RCLK edge. $\overline{REN}$ and $\overline{WEN}$ must be HIGH before bringing $\overline{RT}$ LOW. At least one word, but no more than D –2 words should have been written into the FIFO between Reset (Master or Partial) and the time of Retransmit setup. D = 8,192 for the IDT72V255LA and D = 16,384 for the IDT72V265LA. In FWFT mode, D = 8,193 for the IDT72V255LA and D = 16,385 for the IDT72V265LA.

If IDT Standard mode is selected, the FIFO will mark the beginning of the Retransmit setup by setting $\overline{EF}$ LOW. The change in level will only be noticeable if $\overline{EF}$ was HIGH before setup. During this period, the internal read pointer is initialized to the first location of the RAM array.

When $\overline{EF}$ goes HIGH, Retransmit setup is complete and read operations may begin starting with the first location in memory. Since IDT Standard mode is selected, every word read including the first word following Retransmit setup requires a LOW on $\overline{REN}$ to enable the rising edge of RCLK. See Figure 11, *Retransmit Timing (IDT Standard Mode)*, for the relevant timing diagram.

If FWFT mode is selected, the FIFO will mark the beginning of the Retransmit setup by setting $\overline{OR}$ HIGH. During this period, the internal read pointer is set to the first location of the RAM array.

When $\overline{OR}$ goes LOW, Retransmit setup is complete; at the same time, the contents of the first location appear on the outputs. Since FWFT mode is selected, the first word appears on the outputs, no LOW on $\overline{REN}$ is necessary. Reading all subsequent words requires a LOW on $\overline{REN}$ to enable the rising edge of RCLK. See Figure 12, *Retransmit Timing (FWFT Mode)*, for the relevant timing diagram.

For either IDT Standard mode or FWFT mode, updating of the $\overline{PAE}$, $\overline{HF}$ and $\overline{PAF}$ flags begin with the rising edge of RCLK that RT is setup. $\overline{PAE}$ is synchronized to RCLK, thus on the second rising edge of RCLK after $\overline{RT}$ is setup, the $\overline{PAE}$ flag will be updated. $\overline{HF}$ is asynchronous, thus the rising edge of RCLK that $\overline{RT}$ is setup will update $\overline{HF}$. $\overline{PAF}$ is synchronized to WCLK, thus the second rising edge of WCLK that occurs t_{SKEW} after the rising edge of RCLK that $\overline{RT}$ is setup will update $\overline{PAF}$. $\overline{RT}$ is synchronized to RCLK.

SIGNAL DESCRIPTION

INPUTS:

DATA IN (D0 - D17)

Data inputs for 18-bit wide data.

CONTROLS:

MASTER RESET ($\overline{MRS}$)

A Master Reset is accomplished whenever the $\overline{MRS}$ input is taken to a LOW state. This operation sets the internal read and write pointers to the first location of the RAM array. $\overline{PAE}$ will go LOW, $\overline{PAF}$ will go HIGH, and $\overline{HF}$ will go HIGH.

If FWFT is LOW during Master Reset then the IDT Standard mode, along with $\overline{EF}$ and $\overline{FF}$ are selected. $\overline{EF}$ will go LOW and $\overline{FF}$ will go HIGH. If FWFT is HIGH, then the First Word Fall Through mode (FWFT), along with $\overline{IR}$ and $\overline{OR}$, are selected. $\overline{OR}$ will go HIGH and $\overline{IR}$ will go LOW.

If $\overline{LD}$ is LOW during Master Reset, then $\overline{PAE}$ is assigned a threshold 127 words from the empty boundary and $\overline{PAF}$ is assigned a threshold 127 words from the full boundary; 127 words corresponds to an offset value of 07FH. Following Master Reset, parallel loading of the offsets is permitted, but not serial loading.

If $\overline{LD}$ is HIGH during Master Reset, then $\overline{PAE}$ is assigned a threshold 1,023 words from the empty boundary and $\overline{PAF}$ is assigned a threshold 1,023 words from the full boundary; 1,023 words corresponds to an offset value of 3FFH. Following Master Reset, serial loading of the offsets is permitted, but not parallel loading.

Parallel reading of the registers is always permitted. (See section describing the $\overline{LD}$ pin for further details.)

During a Master Reset, the output register is initialized to all zeroes. A Master Reset is required after power up, before a write operation can take place. $\overline{MRS}$ is asynchronous.

See Figure 5, *Master Reset Timing*, for the relevant timing diagram.

PARTIAL RESET ($\overline{PRS}$)

A Partial Reset is accomplished whenever the $\overline{PRS}$ input is taken to a LOW state. As in the case of the Master Reset, the internal read and write pointers are set to the first location of the RAM array, $\overline{PAE}$ goes LOW, $\overline{PAF}$ goes HIGH, and $\overline{HF}$ goes HIGH.

Whichever mode is active at the time of Partial Reset, IDT Standard mode or First Word Fall Through, that mode will remain selected. If the IDT Standard mode is active, then $\overline{FF}$ will go HIGH and $\overline{EF}$ will go LOW. If the First Word Fall Through mode is active, then $\overline{OR}$ will go HIGH, and $\overline{IR}$ will go LOW.

Following Partial Reset, all values held in the offset registers remain unchanged. The programming method (parallel or serial) currently active at the time of Partial Reset is also retained. The output register is initialized to all zeroes. $\overline{PRS}$ is asynchronous.

A Partial Reset is useful for resetting the device during the course of operation, when reprogramming partial flag offset settings may not be convenient.

See Figure 6, *Partial Reset Timing*, for the relevant timing diagram.

RETRANSMIT ($\overline{RT}$)

The Retransmit operation allows data that has already been read to be accessed again. There are two stages: first, a setup procedure that resets the read pointer to the first location of memory, then the actual retransmit, which consists of reading out the memory contents, starting at beginning of the memory.

Retransmit setup is initiated by holding $\overline{RT}$ LOW during a rising RCLK edge. $\overline{REN}$ and $\overline{WEN}$ must be HIGH before bringing $\overline{RT}$ LOW.

If IDT Standard mode is selected, the FIFO will mark the beginning of the Retransmit setup by setting $\overline{EF}$ LOW. The change in level will only be noticeable if $\overline{EF}$ was HIGH before setup. During this period, the internal read pointer is initialized to the first location of the RAM array.

When $\overline{EF}$ goes HIGH, Retransmit setup is complete and read operations may begin starting with the first location in memory. Since IDT Standard mode is selected, every word read including the first word following Retransmit setup requires a LOW on $\overline{REN}$ to enable the rising edge of RCLK. See Figure 11, *Retransmit Timing (IDT Standard Mode)*, for the relevant timing diagram.

If FWFT mode is selected, the FIFO will mark the beginning of the Retransmit setup by setting $\overline{OR}$ HIGH. During this period, the internal read pointer is set to the first location of the RAM array.

When $\overline{OR}$ goes LOW, Retransmit setup is complete; at the same time, the contents of the first location appear on the outputs. Since FWFT mode is selected, the first word appears on the outputs, no LOW on REN is necessary. Reading all subsequent words requires a LOW on $\overline{REN}$ to enable the rising edge of RCLK. See Figure 12, *Retransmit Timing (FWFT Mode)*, for the relevant timing diagram.

FIRST WORD FALL THROUGH/SERIAL IN (FWFT/SI)

This is a dual purpose pin. During Master Reset, the state of the FWFT/SI input determines whether the device will operate in IDT Standard mode or First Word Fall Through (FWFT) mode.

If, at the time of Master Reset, FWFT/SI is LOW, then IDT Standard mode will be selected. This mode uses the Empty Flag ($\overline{EF}$) to indicate whether or not there are any words present in the FIFO memory. It also uses the Full Flag function ($\overline{FF}$) to indicate whether or not the FIFO memory has any free space for writing. In IDT Standard mode, every word read from the FIFO, including the first, must be requested using the Read Enable ($\overline{REN}$) and RCLK.

If, at the time of Master Reset, FWFT/SI is HIGH, then FWFT mode will be selected. This mode uses Output Ready ($\overline{OR}$) to indicate whether or not there is valid data at the data outputs (Qn). It also uses Input Ready ($\overline{IR}$) to indicate whether or not the FIFO memory has any free space for writing. In the FWFT mode, the first word written to an empty FIFO goes directly to Qn after three RCLK rising edges, $\overline{REN}$ = LOW is not necessary. Subsequent words must be accessed using the Read Enable ($\overline{REN}$) and RCLK.

After Master Reset, FWFT/SI acts as a serial input for loading $\overline{PAE}$ and $\overline{PAF}$ offsets into the programmable registers. The serial input function can only be used when the serial loading method has been selected during Master Reset. Serial programming using the FWFT/SI pin functions the same way in both IDT Standard and FWFT modes.

WRITE CLOCK (WCLK)

A write cycle is initiated on the rising edge of the WCLK input. Data setup and hold times must be met with respect to the LOW-to-HIGH transition of the WCLK. It is permissible to stop the WCLK. Note that while WCLK is idle, the $\overline{FF}$/$\overline{IR}$, $\overline{PAF}$ and $\overline{HF}$ flags will not be updated. (Note that WCLK is only capable of updating $\overline{HF}$ flag to LOW.) The Write and Read Clocks can either be independent or coincident.

WRITE ENABLE ($\overline{WEN}$)

When the $\overline{WEN}$ input is LOW, data may be loaded into the FIFO RAM array on the rising edge of every WCLK cycle if the device is not full. Data is stored in the RAM array sequentially and independently of any ongoing read operation.

When $\overline{WEN}$ is HIGH, no new data is written in the RAM array on each WCLK cycle.

To prevent data overflow in the IDT Standard mode, $\overline{FF}$ will go LOW, inhibiting further write operations. Upon the completion of a valid read cycle, $\overline{FF}$ will go HIGH allowing a write to occur. The $\overline{FF}$ is updated by two WCLK cycles + t_{SKEW} after the RCLK cycle.

To prevent data overflow in the FWFT mode, $\overline{IR}$ will go HIGH, inhibiting further write operations. Upon the completion of a valid read cycle, $\overline{IR}$ will go LOW allowing a write to occur. The $\overline{IR}$ flag is updated by two WCLK cycles + t_{SKEW} after the valid RCLK cycle.

$\overline{WEN}$ is ignored when the FIFO is full in either FWFT or IDT Standard mode.

READ CLOCK (RCLK)

A read cycle is initiated on the rising edge of the RCLK input. Data can be read on the outputs, on the rising edge of the RCLK input. It is permissible to stop the RCLK. Note that while RCLK is idle, the $\overline{EF}$/$\overline{OR}$, $\overline{PAE}$ and $\overline{HF}$ flags will not be updated. (Note that RCLK is only capable of updating the $\overline{HF}$ flag to HIGH.) The Write and Read Clocks can be independent or coincident.

READ ENABLE ($\overline{REN}$)

When Read Enable is LOW, data is loaded from the RAM array into the output register on the rising edge of every RCLK cycle if the device is not empty.

When the $\overline{REN}$ input is HIGH, the output register holds the previous data and no new data is loaded into the output register. The data outputs Q_0-Q_n maintain the previous data value.

In the IDT Standard mode, every word accessed at Qn, including the first word written to an empty FIFO, must be requested using $\overline{REN}$. When the last word has been read from the FIFO, the Empty Flag ($\overline{EF}$) will go LOW, inhibiting further read operations. $\overline{REN}$ is ignored when the FIFO is empty. Once a write is performed, $\overline{EF}$ will go HIGH allowing a read to occur. The $\overline{EF}$ flag is updated by two RCLK cycles + t_{SKEW} after the valid WCLK cycle.

In the FWFT mode, the first word written to an empty FIFO automatically goes to the outputs Qn, on the third valid LOW to HIGH transition of RCLK + t_{SKEW} after the first write. $\overline{REN}$ does not need to be asserted LOW. In order to access all other words, a read must be executed using $\overline{REN}$. The RCLK LOW to HIGH transition after the last word has been read from the FIFO, Output Ready ($\overline{OR}$) will go HIGH with a true read (RCLK with $\overline{REN}$ = LOW), inhibiting further read operations. $\overline{REN}$ is ignored when the FIFO is empty.

SERIAL ENABLE ($\overline{SEN}$)

The $\overline{SEN}$ input is an enable used only for serial programming of the offset registers. The serial programming method must be selected during Master Reset. $\overline{SEN}$ is always used in conjunction with $\overline{LD}$. When these lines are both LOW, data at the SI input can be loaded into the program register one bit for each LOW-to-HIGH transition of WCLK. (See Figure 4.)

When $\overline{SEN}$ is HIGH, the programmable registers retains the previous settings and no offsets are loaded. $\overline{SEN}$ functions the same way in both IDT Standard and FWFT modes.

OUTPUT ENABLE ($\overline{OE}$)

When Output Enable is enabled (LOW), the parallel output buffers receive data from the output register. When $\overline{OE}$ is HIGH, the output data bus (Qn) goes into a high impedance state.

LOAD ($\overline{LD}$)

This is a dual purpose pin. During Master Reset, the state of the $\overline{LD}$ input determines one of two default offset values (127 or 1,023) for the $\overline{PAE}$ and $\overline{PAF}$ flags, along with the method by which these offset registers can be programmed, parallel or serial. After Master Reset, $\overline{LD}$ enables write operations to and read operations from the offset registers. Only the offset loading method currently selected can be used to write to the registers. Offset registers can be read only in parallel. A LOW on $\overline{LD}$ during Master Reset selects a default $\overline{PAE}$ offset value of 07FH (a threshold 127 words from the empty boundary), a default $\overline{PAF}$ offset value of 07FH (a threshold 127 words from the full boundary), and parallel loading of other offset values. A HIGH on $\overline{LD}$ during Master Reset selects a default $\overline{PAE}$ offset value of 3FFH (a threshold 1,023 words from the empty boundary), a default $\overline{PAF}$ offset value of 3FFH (a threshold 1,023 words from the full boundary), and serial loading of other offset values.

After Master Reset, the $\overline{LD}$ pin is used to activate the programming process of the flag offset values $\overline{PAE}$ and $\overline{PAF}$. Pulling $\overline{LD}$ LOW will begin a serial loading or parallel load or read of these offset values. See Figure 4, *Programmable Flag Offset Programming Sequence*.

OUTPUTS:

FULL FLAG ($\overline{FF}$/$\overline{IR}$)

This is a dual purpose pin. In IDT Standard mode, the Full Flag ($\overline{FF}$) function is selected. When the FIFO is full, $\overline{FF}$ will go LOW, inhibiting further write operations. When $\overline{FF}$ is HIGH, the FIFO is not full. If no reads are performed after a reset (either $\overline{MRS}$ or $\overline{PRS}$), $\overline{FF}$ will go LOW after D writes to the FIFO (D = 8,192 for the IDT72V255LA and 16,384 for the IDT72V265LA). See Figure 7, *Write Cycle and Full Flag Timing (IDT Standard Mode)*, for the relevant timing information.

In FWFT mode, the Input Ready ($\overline{IR}$) function is selected. $\overline{IR}$ goes LOW when memory space is available for writing in data. When there is no longer any free space left, $\overline{IR}$ goes HIGH, inhibiting further write operations. If no reads are performed after a reset (either $\overline{MRS}$ or $\overline{PRS}$), $\overline{IR}$ will go HIGH after D writes to the FIFO (D = 8,193 for the IDT72V255LA and 16,385 for the IDT72V265LA) See Figure 9, *Write Timing (FWFT Mode)*, for the relevant timing information.

The $\overline{IR}$ status not only measures the contents of the FIFO memory, but also counts the presence of a word in the output register. Thus, in FWFT mode, the total number of writes necessary to deassert $\overline{IR}$ is one greater than needed to assert $\overline{FF}$ in IDT Standard mode.

$\overline{FF}$/$\overline{IR}$ is synchronous and updated on the rising edge of WCLK. $\overline{FF}$/$\overline{IR}$ are double register-buffered outputs.

EMPTY FLAG ($\overline{EF}$/$\overline{OR}$)

This is a dual purpose pin. In the IDT Standard mode, the Empty Flag ($\overline{EF}$) function is selected. When the FIFO is empty, $\overline{EF}$ will go LOW, inhibiting further read operations. When $\overline{EF}$ is HIGH, the FIFO is not empty. See Figure 8, *Read Cycle, Empty Flag and First Word Latency Timing (IDT Standard Mode)*, for the relevant timing information.

In FWFT mode, the Output Ready ($\overline{OR}$) function is selected. $\overline{OR}$ goes LOW at the same time that the first word written to an empty FIFO appears valid on the outputs. $\overline{OR}$ stays LOW after the RCLK LOW to HIGH transition that shifts the last word from the FIFO memory to the outputs. $\overline{OR}$ goes HIGH only with a true read (RCLK with $\overline{REN}$ = LOW). The previous data stays at the outputs, indicating the last word was read. Further data reads are inhibited until $\overline{OR}$ goes LOW again. See Figure 10, *Read Timing (FWFT Mode)*, for the relevant timing information.

$\overline{EF}$/$\overline{OR}$ is synchronous and updated on the rising edge of RCLK.

In IDT Standard mode, $\overline{EF}$ is a double register-buffered output. In FWFT mode, $\overline{OR}$ is a triple register-buffered output.

PROGRAMMABLE ALMOST-FULL FLAG ($\overline{PAF}$)

The Programmable Almost-Full flag ($\overline{PAF}$) will go LOW when the FIFO reaches the almost-full condition. In IDT Standard mode, if no reads are performed after reset ($\overline{MRS}$), $\overline{PAF}$ will go LOW after (D - m) words are written to the FIFO. The $\overline{PAF}$ will go LOW after (8,192-m) writes for the IDT72V255LA and (16,384-m) writes for the IDT72V265LA. The offset "m" is the full offset value. The default setting for this value is stated in the footnote of Table 1.

In FWFT mode, the $\overline{PAF}$ will go LOW after (8,193-m) writes for the IDT72V255LA and (16,385-m) writes for the IDT72V265LA, where m is the full offset value. The default setting for this value is stated in the footnote of Table 2.

See Figure 16, *Programmable Almost-Full Flag Timing (IDT Standard and FWFT Mode)*, for the relevant timing information.

$\overline{PAF}$ is synchronous and updated on the rising edge of WCLK.

PROGRAMMABLE ALMOST-EMPTY FLAG ($\overline{PAE}$)

The Programmable Almost-Empty flag ($\overline{PAE}$) will go LOW when the FIFO reaches the almost-empty condition. In IDT Standard mode, $\overline{PAE}$ will go LOW when there are n words or less in the FIFO. The offset "n" is the empty offset value. The default setting for this value is stated in the footnote of Table 1.

In FWFT mode, the $\overline{PAE}$ will go LOW when there are n+1 words or less in the FIFO. The default setting for this value is stated in the footnote of Table 2.

See Figure 17, *Programmable Almost-Empty Flag Timing (IDT Standard and FWFT Mode)*, for the relevant timing information.

$\overline{PAE}$ is synchronous and updated on the rising edge of RCLK.

HALF-FULL FLAG ($\overline{HF}$)

This output indicates a half-full FIFO. The rising WCLK edge that fills the FIFO beyond half-full sets $\overline{HF}$ LOW. The flag remains LOW until the difference between the write and read pointers becomes less than or equal to half of the total depth of the device; the rising RCLK edge that accomplishes this condition sets $\overline{HF}$ HIGH.

In IDT Standard mode, if no reads are performed after reset ($\overline{MRS}$ or $\overline{PRS}$), $\overline{HF}$ will go LOW after (D/2 + 1) writes to the FIFO, where D = 8,192 for the IDT72V255LA and 16,384 for the IDT72V265LA.

In FWFT mode, if no reads are performed after reset ($\overline{MRS}$ or $\overline{PRS}$), $\overline{HF}$ will go LOW after (D-1/2 + 2) writes to the FIFO, where D = 8,193 for the IDT72V255LA and 16,385 for the IDT72V265LA.

See Figure 18, *Half-Full Flag Timing (IDT Standard and FWFT Modes)*, for the relevant timing information. Because $\overline{HF}$ is updated by both RCLK and WCLK, it is considered asynchronous.

DATA OUTPUTS (Q_0-Q_{17})

(Q_0 - Q_{17}) are data outputs for 18-bit wide data.

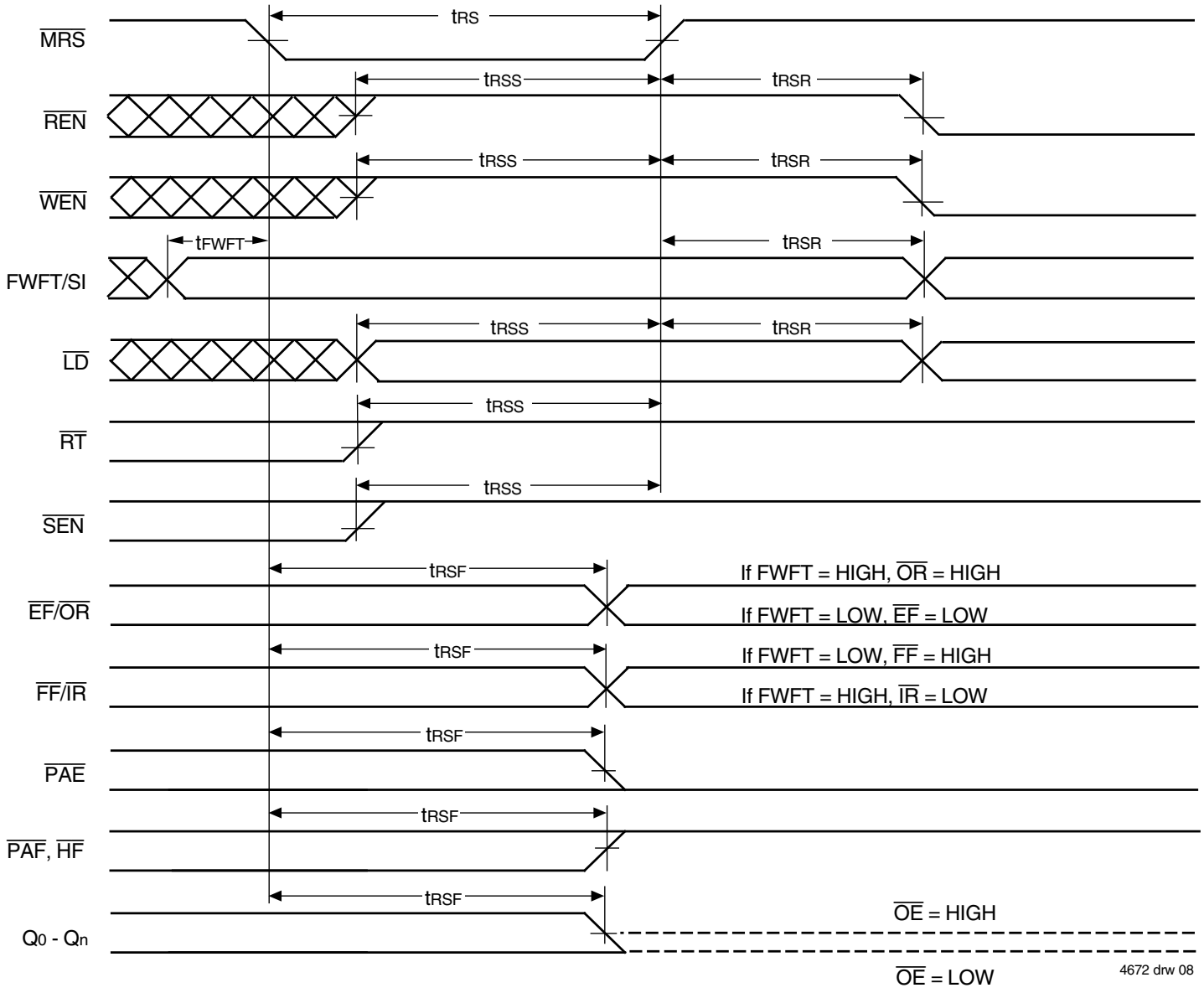

Figure 5. Master Reset Timing

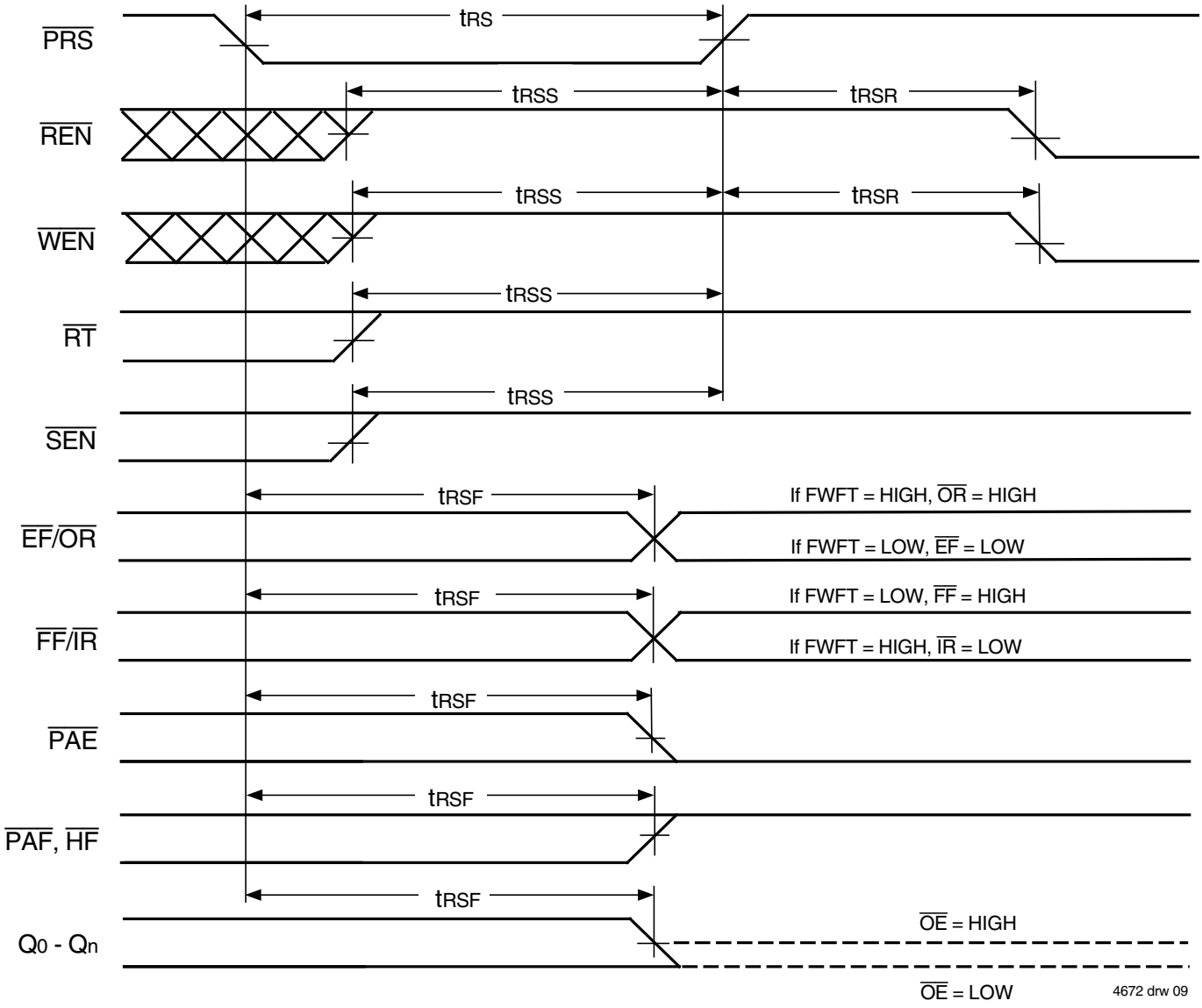

Figure 6. Partial Reset Timing

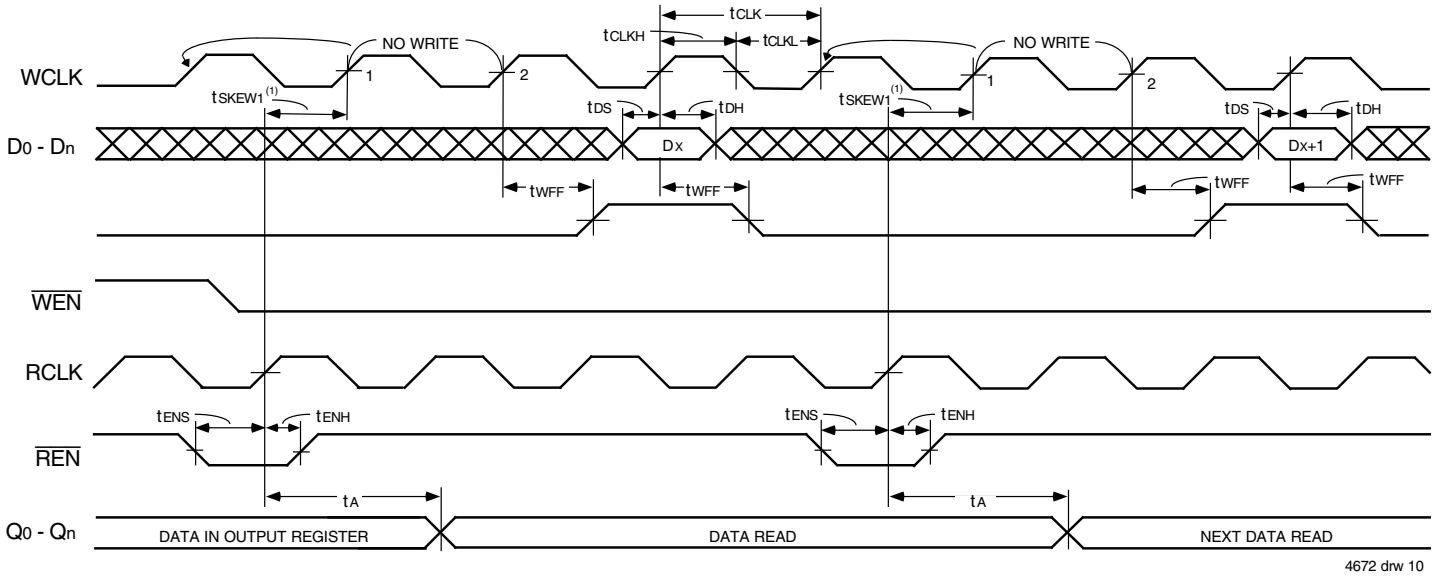

NOTES:

1. t_{SKEW1} is the minimum time between a rising RCLK edge and a rising WCLK edge to guarantee that $\overline{FF}$ will go high (after one WCLK cycle pus t_{WFF}). If the time between the rising edge of the RCLK and the rising edge of the WCLK is less than t_{SKEW1}, then the FF deassertion may be delayed one extra WCLK cycle.
2. $\overline{LD}$ = HIGH, $\overline{OE}$ = LOW, $\overline{EF}$ = HIGH

Figure 7. Write Cycle and Full Flag Timing (IDT Standard Mode)

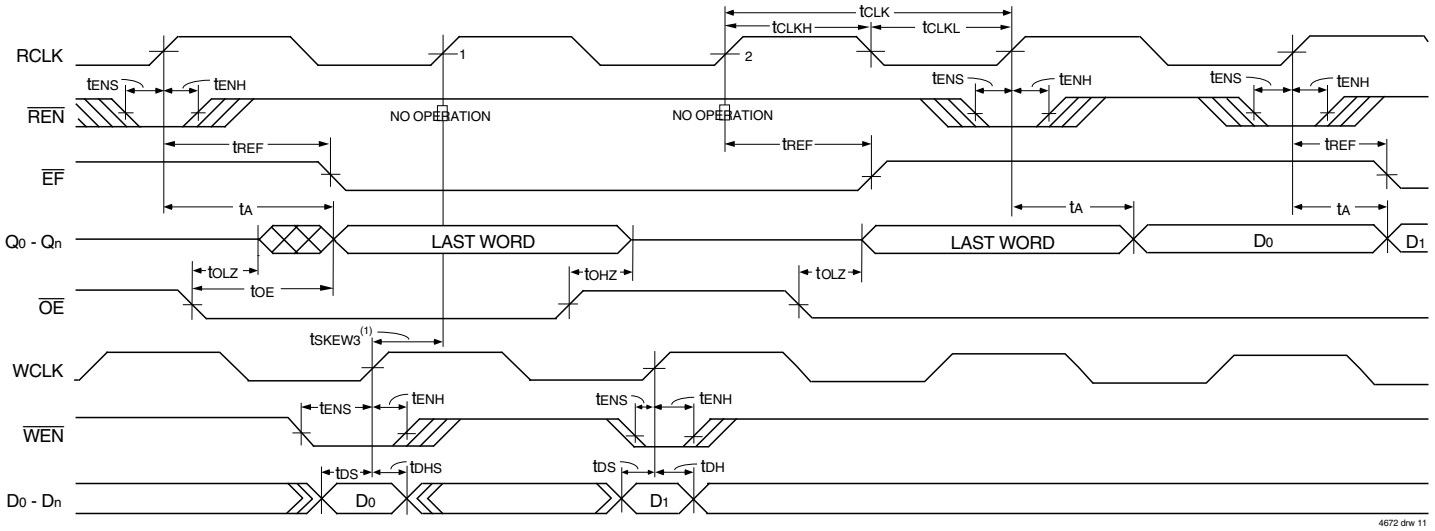

NOTES:

1. t_{SKEW3} is the minimum time between a rising WCLK edge and a rising RCLK edge to guarantee that $\overline{EF}$ will go HIGH (after one RCLK cycle plus t_{REF}). If the time between the rising edge of WCLK and the rising edge of RCLK is less than t_{SKEW3}, then $\overline{EF}$ deassertion may be delayed one extra RCLK cycle.
2. $\overline{LD}$ = HIGH.
3. First word latency: 60ns + t_{REF} + 1*t_{RCLK}.

Figure 8. Read Cycle, Empty Flag and First Data Word Latency Timing (IDT Standard Mode)

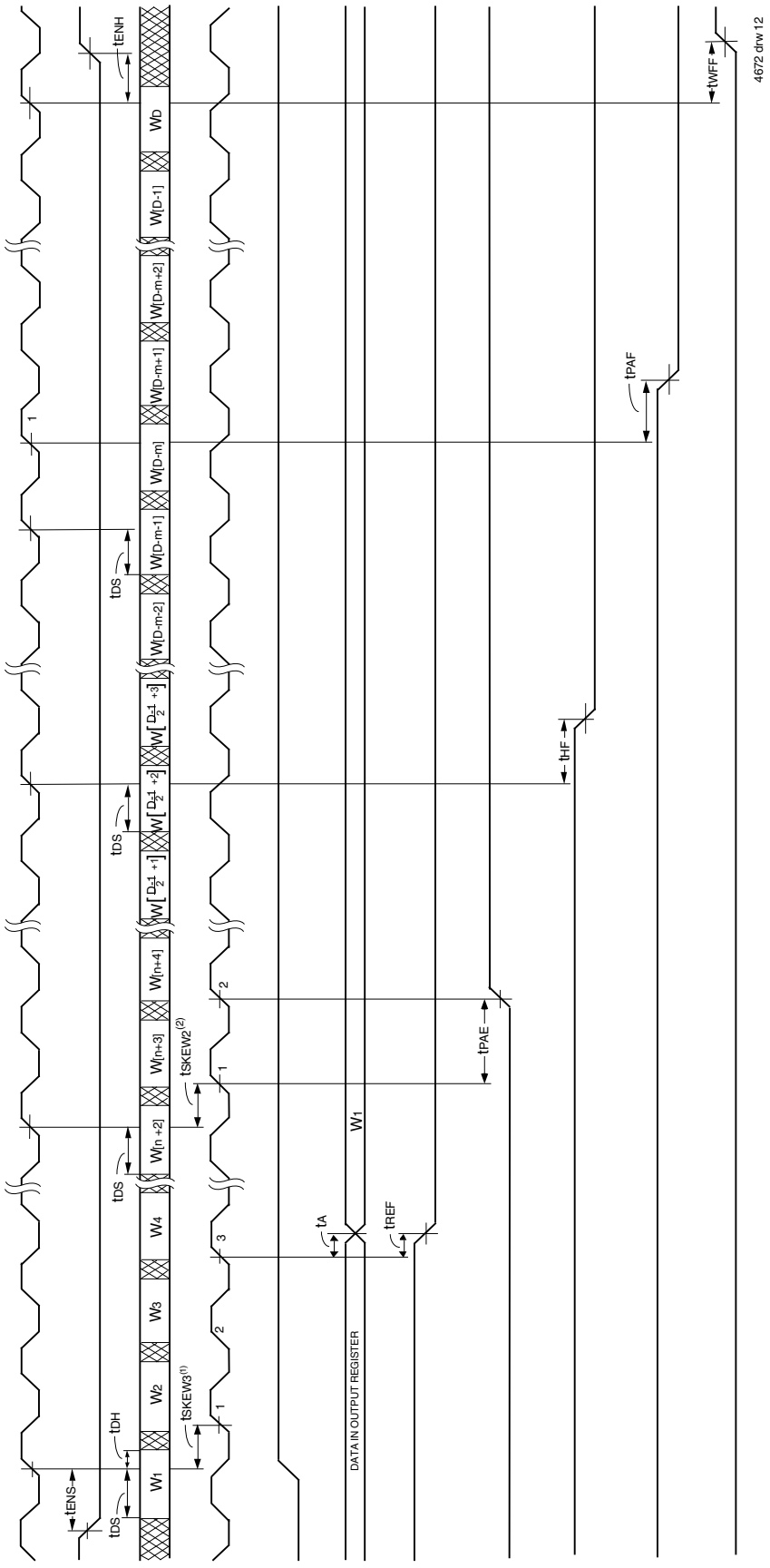

NOTES:
1. t_{SKEW3} is the minimum time between a rising WCLK edge and a rising RCLK edge to guarantee that $\overline{OR}$ will go LOW after two RCLK cycles plus t_{REF}. If the time between the rising edge of WCLK and the rising edge of RCLK is less than t_{SKEW3}, then $\overline{OR}$ assertion may be delayed one extra RCLK cycle.
2. t_{SKEW2} is the minimum time between a rising WCLK edge and a rising RCLK edge to guarantee that $\overline{PAE}$ will go HIGH after one RCLK cycle plus t_{PAE}. If the time between the rising edge of WCLK and the rising edge of RCLK is less than t_{SKEW2}, then the $\overline{PAE}$ deassertion may be delayed one extra RCLK cycle.
3. $\overline{LD}$ = HIGH, $\overline{OE}$ = LOW
4. n = $\overline{PAE}$ offset, m = $\overline{PAF}$ offset and D = maximum FIFO depth.
5. D = 8,193 for IDT72V255LA and 16,385 for IDT72V265LA.
6. First word latency: 60ns + t_{REF} + 2*T_{RCLK}.

Figure 9. Write Timing (First Word Fall Through Mode)

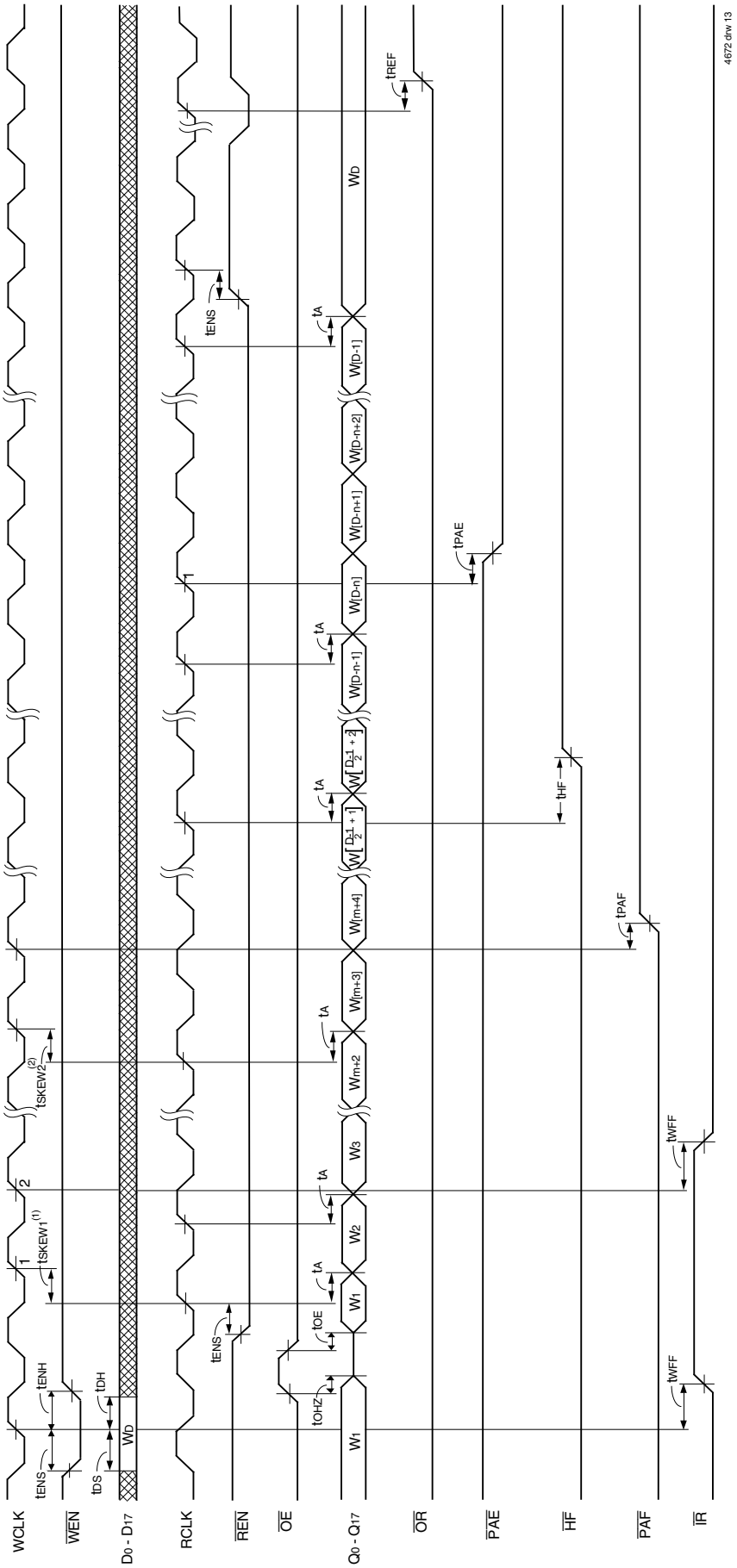

NOTES:

1. t_{SKEW1} is the minimum time between a rising RCLK edge and a rising WCLK edge to guarantee that $\overline{IR}$ will go LOW after one WCLK cycle plus t_{WFF}. If the time between the rising edge of RCLK and the rising edge of WCLK is less than t_{SKEW1}, then the $\overline{IR}$ assertion may be delayed one extra WCLK cycle.
2. t_{SKEW2} is the minimum time between a rising RCLK edge and a rising WCLK edge to guarantee that $\overline{PAF}$ will go HIGH after one WCLK cycle plus t_{PAF}. If the time between the rising edge of RCLK and the rising edge of WCLK is less than t_{SKEW2}, then the $\overline{PAF}$ deassertion may be delayed one extra WCLK cycle.
3. $\overline{LD}$ = HIGH
4. n = $\overline{PAE}$ Offset, m = $\overline{PAF}$ offset and D = maximum FIFO depth.
5. D = 8,193 for IDT72V255LA and 16,385 for IDT72V265LA.

Figure 10. Read Timing (First Word Fall Through Mode)

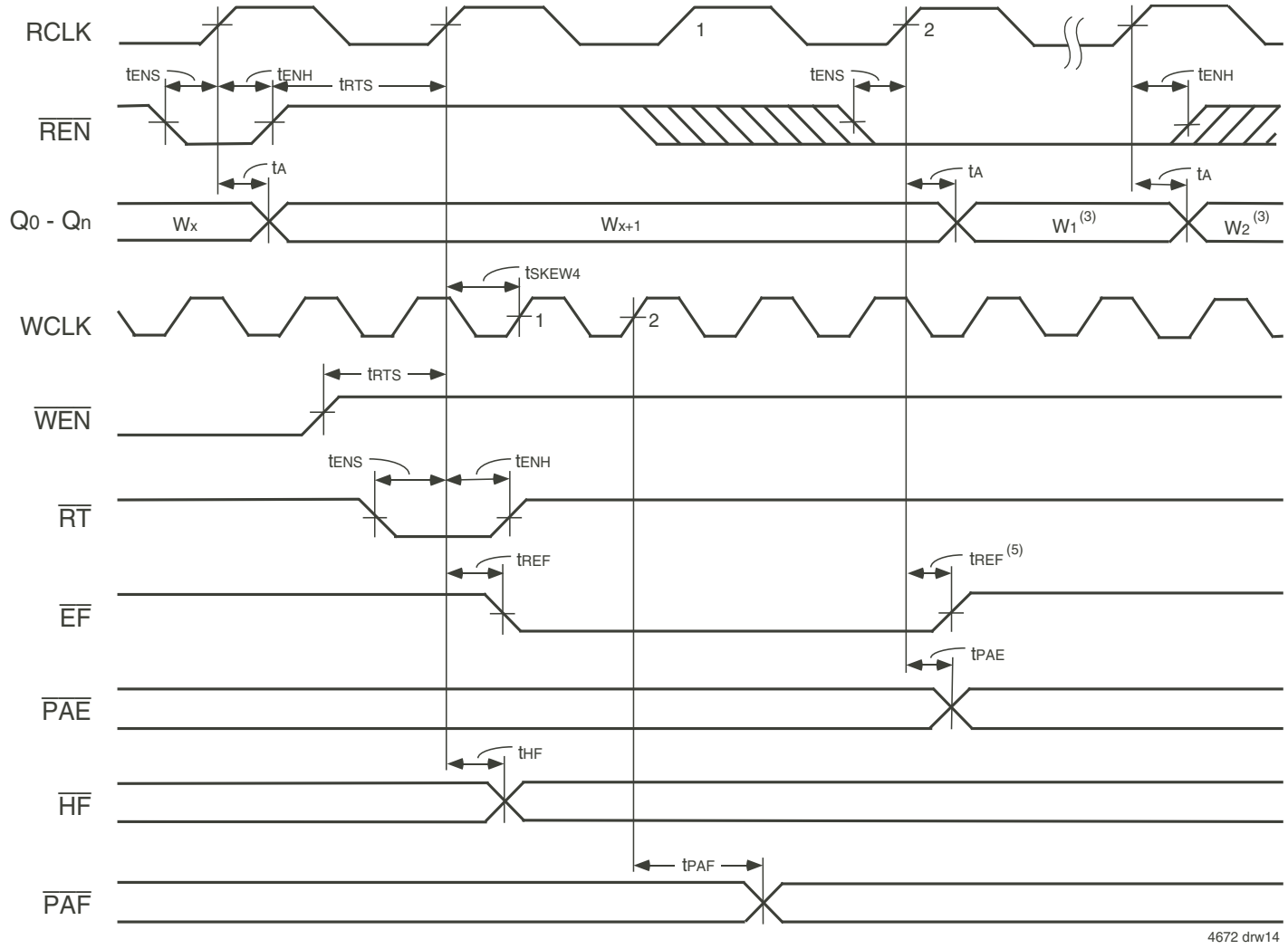

NOTES:

1. Retransmit setup is complete after $\overline{EF}$ returns HIGH, only then can a read operation begin.
2. $\overline{OE}$ = LOW.
3. W_1 = first word written to the FIFO after Master Reset, W_2 = second word written to the FIFO after Master Reset.
4. No more than D –2 may be written to the FIFO between Reset (Master or Partial) and Retransmit setup. Therefore, $\overline{FF}$ will be HIGH throughout the Retransmit setup procedure. D = 8,192 for IDT72V255LA and 16,384 for IDT72V265LA.
5. $\overline{EF}$ goes HIGH at 60 ns + 1 RCLK cycle + t_{REF}.

Figure 11. Retransmit Timing (IDT Standard Mode)

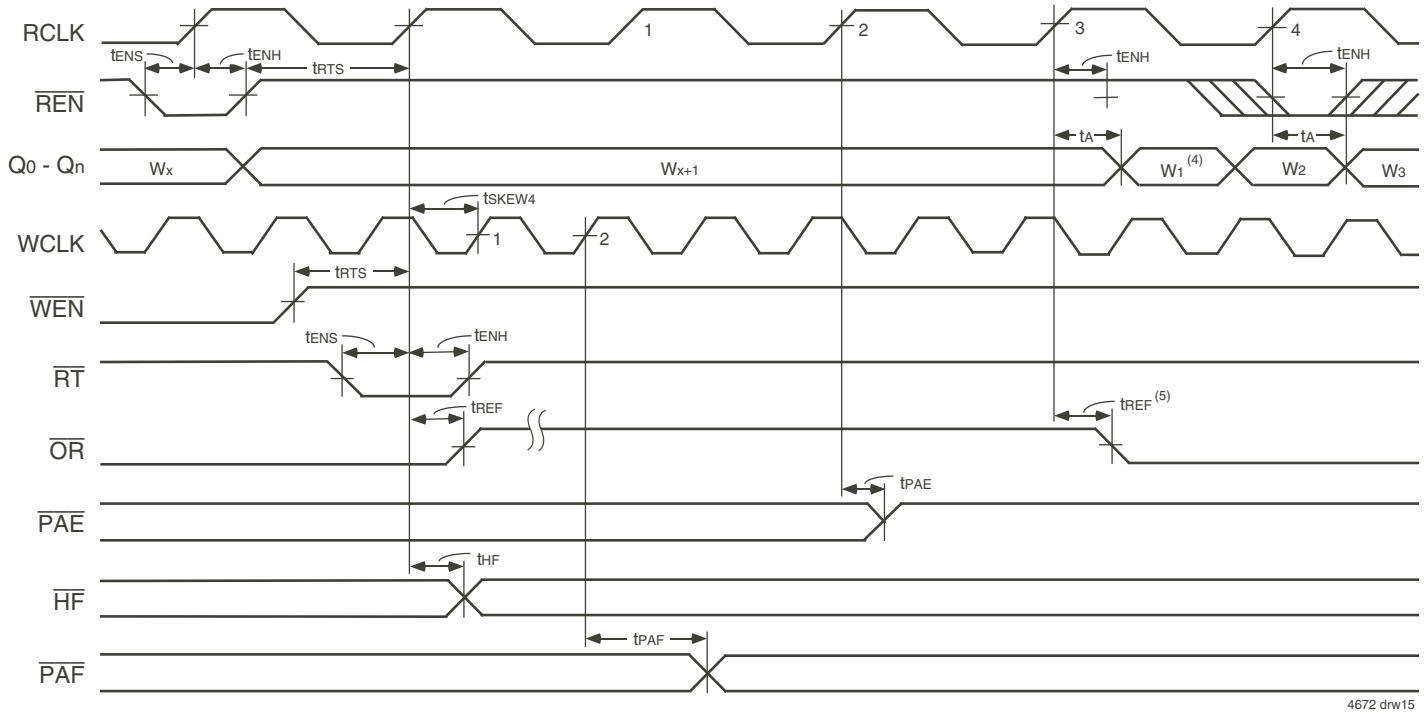

NOTES:
1. Retransmit setup is complete after $\overline{OR}$ returns LOW.
2. No more than D –2 words may be written to the FIFO between Reset (Master or Partial) and Retransmit setup. Therefore, $\overline{IR}$ will be LOW throughout the Retransmit setup procedure. D = 8,193 for the IDT72V255LA and 16,385 for the IDT72V265LA.
3. $\overline{OE}$ = LOW
4. W_1, W_2, W_3 = first, second and third words written to the FIFO after Master Reset.
5. $\overline{OR}$ goes LOW at 60 ns + 2 RCLK cycles + t_{REF}.

Figure 12. Retransmit Timing (FWFT Mode)

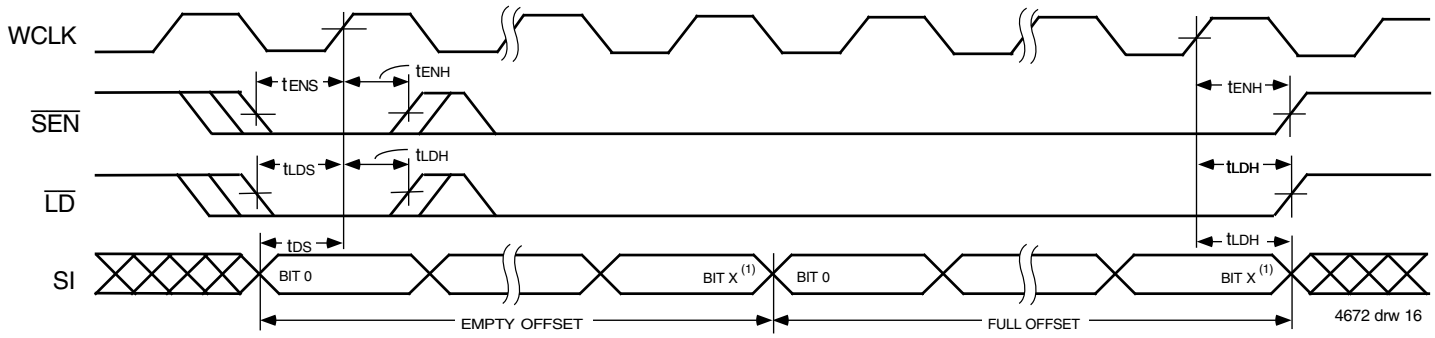

NOTE:
1. X = 12 for the IDT72V255LA and X = 13 for the IDT72V265LA.

Figure 13. Serial Loading of Programmable Flag Registers (IDT Standard and FWFT Modes)

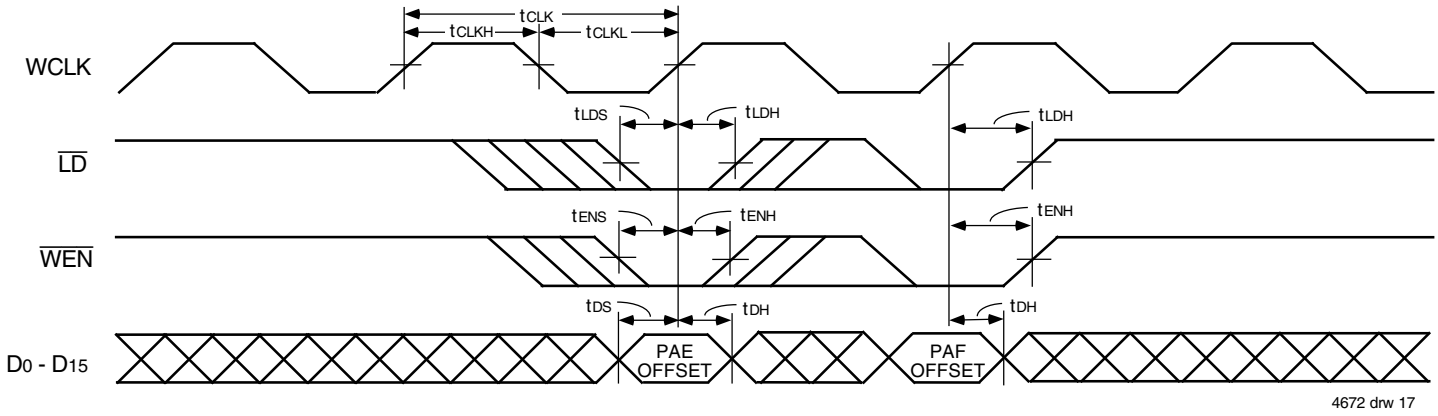

Figure 14. Parallel Loading of Programmable Flag Registers (IDT Standard and FWFT Modes)

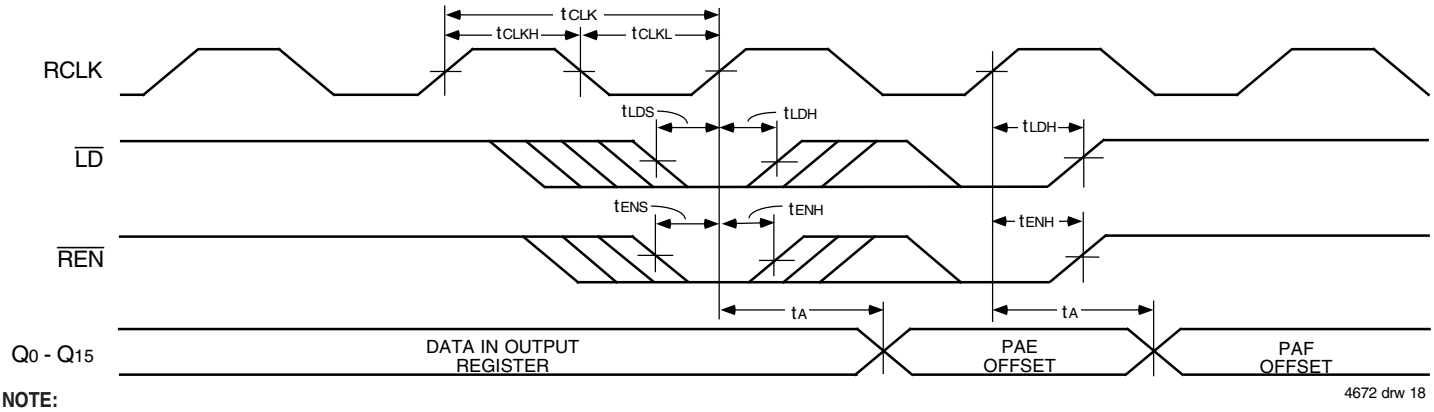

NOTE:
1. $\overline{OE}$ = LOW

Figure 15. Parallel Read of Programmable Flag Registers (IDT Standard and FWFT Modes)

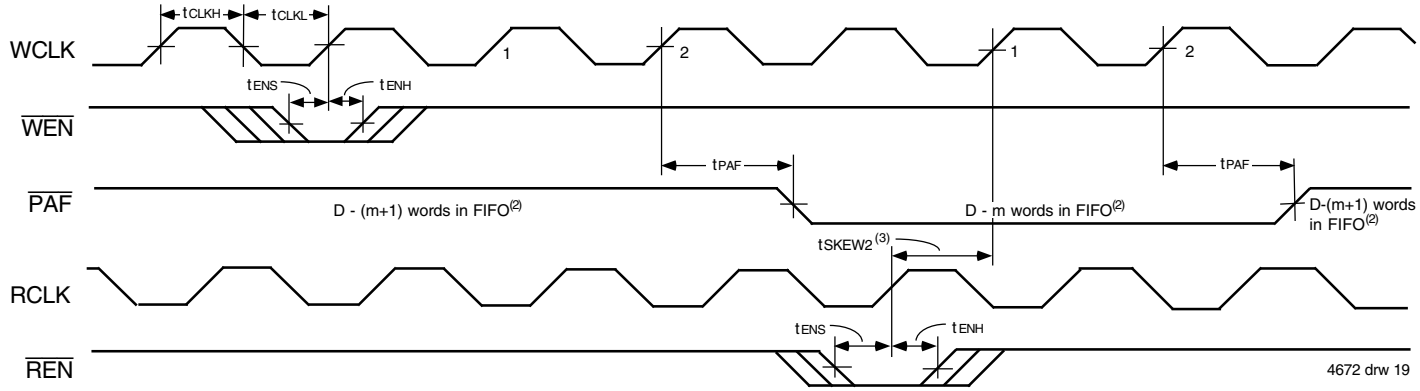

NOTES:
1. m = $\overline{PAF}$ offset.
2. D = maximum FIFO depth.
   In IDT Standard mode: D = 8,192 for the IDT72V255LA and 16,384 for the IDT72V265LA.
   In FWFT mode: D = 8,193 for the IDT72V255LA and 16,385 for the IDT72V265LA.
3. t_{SKEW2} is the minimum time between a rising RCLK edge and a rising WCLK edge to guarantee that $\overline{PAF}$ will go HIGH (after one WCLK cycle plus t_{PAF}). If the time between the rising edge of RCLK and the rising edge of WCLK is less than t_{SKEW2}, then the $\overline{PAF}$ deassertion time may be delayed one extra WCLK cycle.
4. $\overline{PAF}$ is asserted and updated on the rising edge of WCLK only.

Figure 16. Programmable Almost-Full Flag Timing (IDT Standard and FWFT Modes)

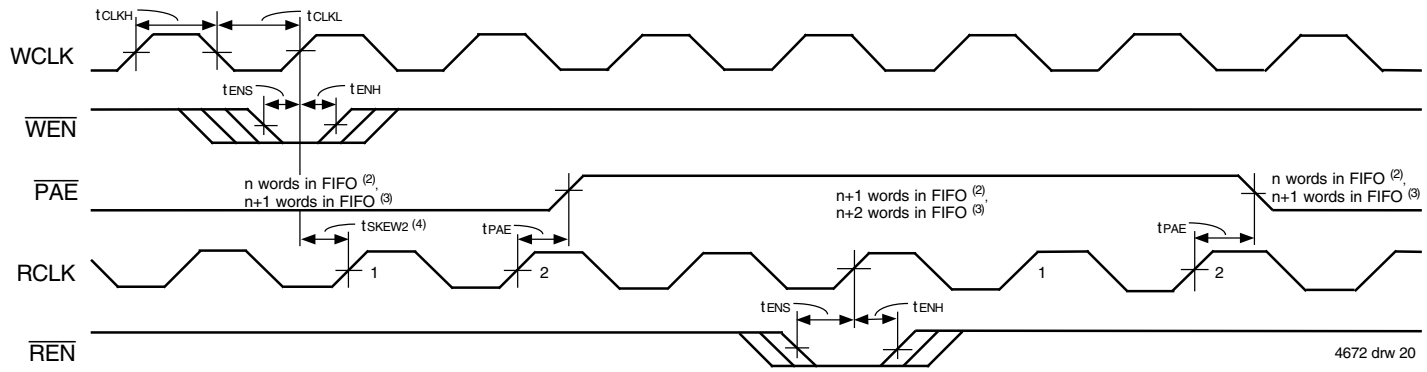

NOTES:
1. n = $\overline{PAE}$ offset.
2. For IDT Standard mode
3. For FWFT mode.
4. t_{SKEW2} is the minimum time between a rising WCLK edge and a rising RCLK edge to guarantee that $\overline{PAE}$ will go HIGH (after one RCLK cycle plus t_{PAE}). If the time between the rising edge of WCLK and the rising edge of RCLK is less than t_{SKEW2}, then the $\overline{PAE}$ deassertion may be delayed one extra RCLK cycle.
5. $\overline{PAE}$ is asserted and updated on the rising edge of WCLK only.

Figure 17. Programmable Almost-Empty Flag Timing (IDT Standard and FWFT Modes)

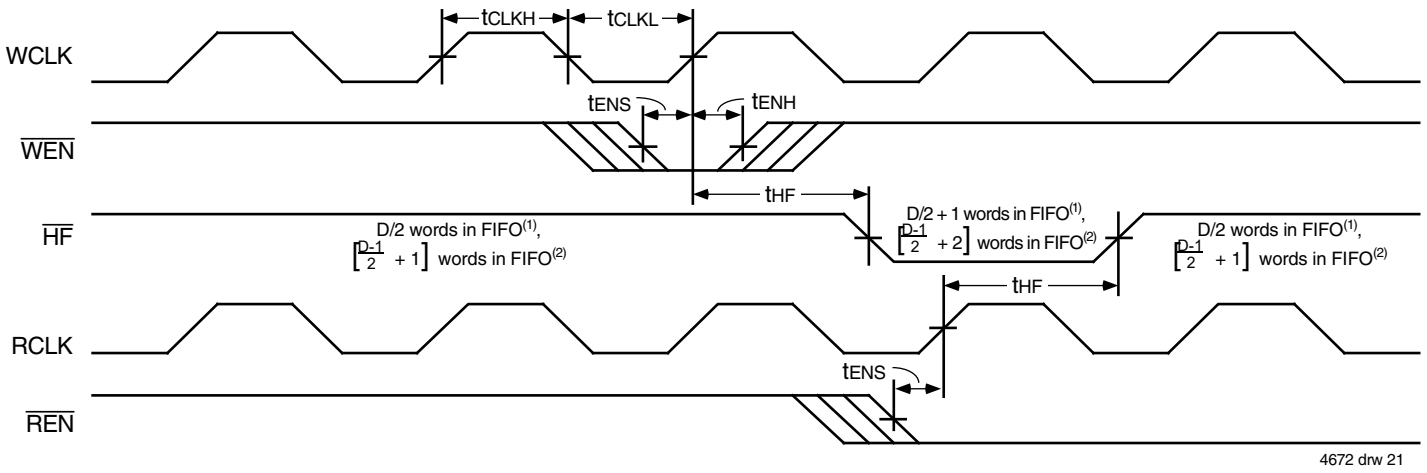

NOTES:
1. For IDT Standard mode: D = maximum FIFO depth. D = 8,192 for the IDT72V255LA and 16,384 for the IDT72V265LA.
2. For FWFT mode: D = maximum FIFO depth. D = 8,193 for the IDT72V255LA and 16,385 for the IDT72V265LA.

Figure 18. Half-Full Flag Timing (IDT Standard and FWFT Modes)

OPTIONAL CONFIGURATIONS

WIDTH EXPANSION CONFIGURATION

Word width may be increased simply by connecting together the control signals of multiple devices. Status flags can be detected from any one device. The exceptions are the $\overline{EF}$ and $\overline{FF}$ functions in IDT Standard mode and the $\overline{IR}$ and $\overline{OR}$ functions in FWFT mode. Because of variations in skew between RCLK and WCLK, it is possible for $\overline{EF}$/$\overline{FF}$ deassertion and $\overline{IR}$/$\overline{OR}$ assertion to vary by one cycle between FIFOs. In IDT Standard mode, such problems can be avoided by creating composite flags, that is, ANDing $\overline{EF}$ of every FIFO, and separately ANDing $\overline{FF}$ of every FIFO. In FWFT mode, composite flags can be created by ORing $\overline{OR}$ of every FIFO, and separately ORing $\overline{IR}$ of every FIFO.

Figure 23 demonstrates a width expansion using two IDT72V255LA/72V265LA devices. D0 - D17 from each device form a 36-bit wide input bus and Q0-Q17 from each device form a 36-bit wide output bus. Any word width can be attained by adding additional IDT72V255LA/72V265LA devices.

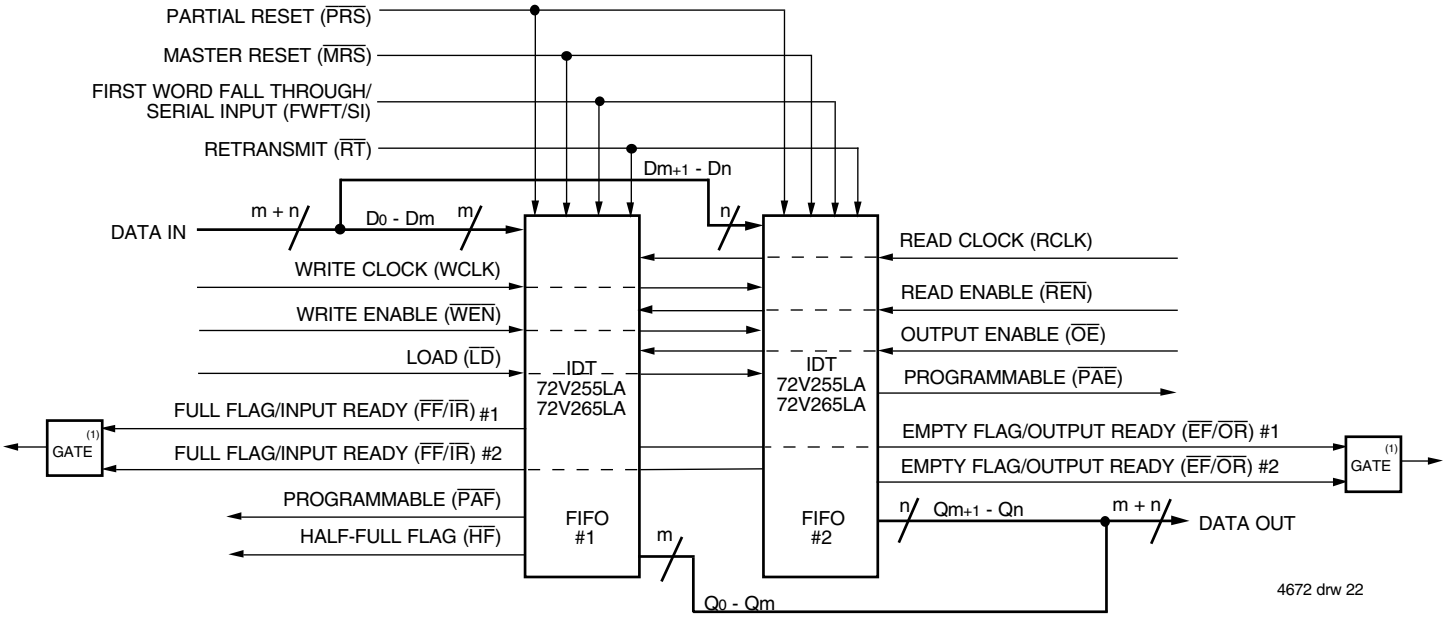

NOTES:
1. Use an AND gate in IDT Standard mode, an OR gate in FWFT mode.
2. Do not connect any output control signals directly together.
3. FIFO #1 and FIFO #2 must be the same depth, but may be different word widths.

Figure 19. Block Diagram of 8,192 x 36 and 16,384 x 36 Width Expansion

DEPTH EXPANSION CONFIGURATION (FWFT MODE ONLY)

The IDT72V255LA can easily be adapted to applications requiring depths greater than 8,192 and 16,384 for the IDT72V265LA with an 18-bit bus width. In FWFT mode, the FIFOs can be connected in series (the data outputs of one FIFO connected to the data inputs of the next) with no external logic necessary. The resulting configuration provides a total depth equivalent to the sum of the depths associated with each single FIFO. Figure 24 shows a depth expansion using two IDT72V255LA/72V265LA devices.

Care should be taken to select FWFT mode during Master Reset for all FIFOs in the depth expansion configuration. The first word written to an empty configuration will pass from one FIFO to the next ("ripple down") until it finally appears at the outputs of the last FIFO in the chain–no read operation is necessary but the RCLK of each FIFO must be free-running. Each time the data word appears at the outputs of one FIFO, that device's $\overline{OR}$ line goes LOW, enabling a write to the next FIFO in line.

For an empty expansion configuration, the amount of time it takes for $\overline{OR}$ of the last FIFO in the chain to go LOW (i.e. valid data to appear on the last FIFO's outputs) after a word has been written to the first FIFO is the sum of the delays for each individual FIFO:

$$(N - 1)*(4*\text{transfer clock}) + 3*T_{RCLK}$$

where N is the number of FIFOs in the expansion and T_{RCLK} is the RCLK period. Note that extra cycles should be added for the possibility that the t_{SKEW3} specification is not met between WCLK and transfer clock, or RCLK and transfer clock, for the $\overline{OR}$ flag.

The "ripple down" delay is only noticeable for the first word written to an empty depth expansion configuration. There will be no delay evident for subsequent words written to the configuration.

The first free location created by reading from a full depth expansion configuration will "bubble up" from the last FIFO to the previous one until it finally moves into the first FIFO of the chain. Each time a free location is created in one FIFO of the chain, that FIFO's $\overline{IR}$ line goes LOW, enabling the preceding FIFO to write a word to fill it.

For a full expansion configuration, the amount of time it takes for $\overline{IR}$ of the first FIFO in the chain to go LOW after a word has been read from the last FIFO is the sum of the delays for each individual FIFO:

$$(N - 1)*(3*\text{transfer clock}) + 2\ T_{WCLK}$$

where N is the number of FIFOs in the expansion and T_{WCLK} is the WCLK period. Note that extra cycles should be added for the possibility that the tSKEW1 specification is not met between RCLK and transfer clock, or WCLK and transfer clock, for the $\overline{IR}$ flag.

The Transfer Clock line should be tied to either WCLK or RCLK, whichever is faster. Both these actions result in data moving, as quickly as possible, to the end of the chain and free locations to the beginning of the chain.

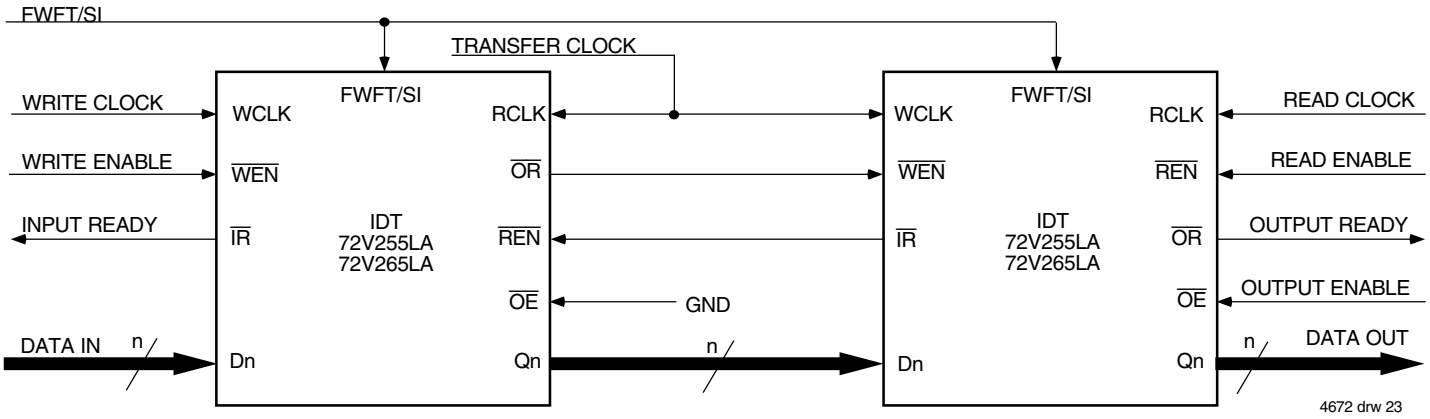

Figure 20. Block Diagram of 16,384 x 18 and 32,768 x 18 Depth Expansion

ORDERING INFORMATION

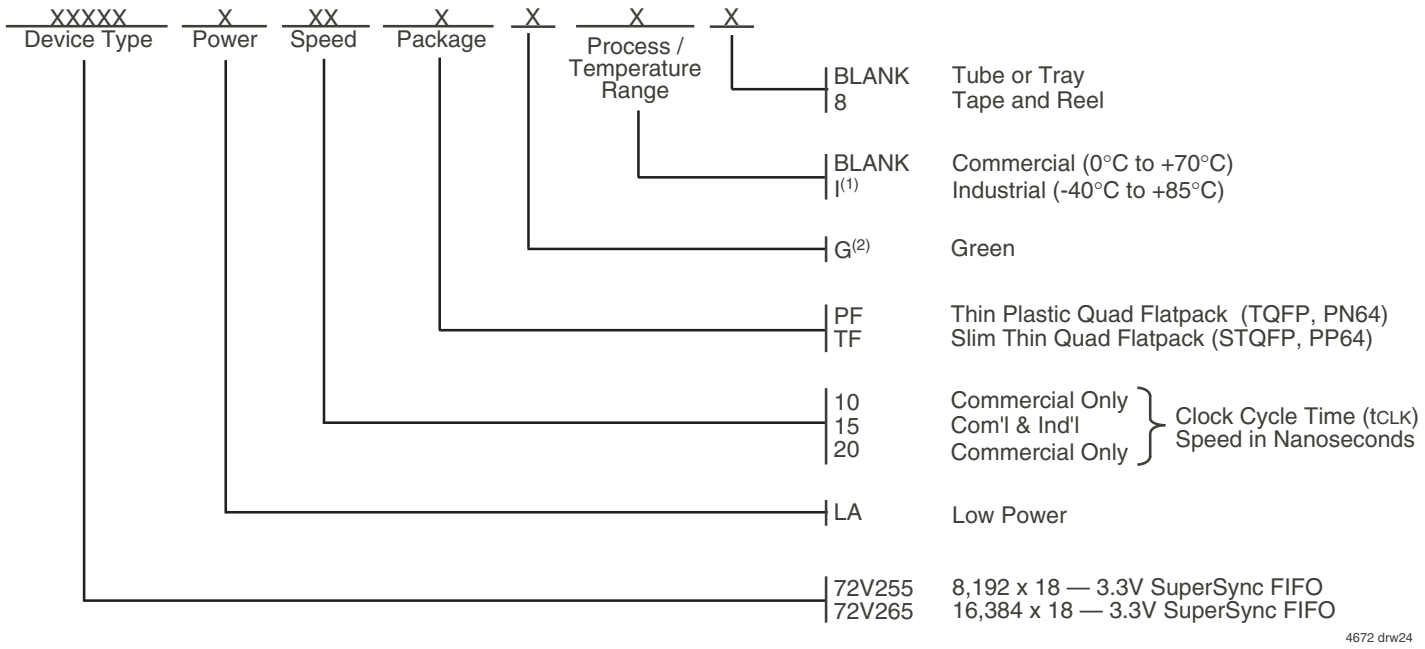

NOTES:

1. Industrial temperature range product for 15ns speed grade is available as a standard device. All other speed grades are available by special order.
2. Green parts available. For specific speeds and packages contact your sales office.
   LEAD FINISH (SnPb) parts are in EOL process. Product Discontinuation Notice - PDN# SP-17-02

DATASHEET DOCUMENT HISTORY

04/25/2001	pgs. 1, 5, 6 and 26.
10/17/2005	pgs. 1, 6, 20, 21 and 26. PCN#F0509-01.
10/22/2008	pg. 26.
08/14/2014	pgs. 1, 2 and 26.
01/09/2018	Product Discontinuation Notice - PDN# SP-17-02 Last time buy expires June 15, 2018.

CORPORATE HEADQUARTERS
6024 Silver Creek Valley Road
San Jose, CA 95138

for SALES:
800-345-7015 or 408-284-8200
fax: 408-284-2775
www.idt.com

for Tech Support:
408-360-1753
email: FIFOhelp@idt.com

DIFFERENCES BETWEEN THE IDT72V255LA/72V265LA AND IDT72V255L/72V265L

IDT has improved the performance of the IDT72V255/72V265 SuperSync™ FIFOs. The new versions are designated by the "LA" mark. The LA part is pin-for-pin compatible with the original "L" version. Some difference exist between the two versions. The following table details these differences.

Item	NEW PART IDT72V255LA IDT72V265LA	OLD PART IDT72V255L IDT72V265L	Comments
Pin #3	DC (Don't Care) - There is no restriction on WCLK and RCLK. See note 1.	FS (Frequency Select)	In the LA part this pin must be tied to either V_{CC} or GND and must not toggle after reset.
First Word Latency (IDT Standard Mode)	60ns(2) + t_{REF} + 1 T_{RCLK}(4)	t_{FWL_1} = 10*Tf(3) + 2T_{RCLK}(4)(ns)	First word latency in the LA part is a fixed value, independent of the frequency of RCLK or WCLK.
First Word Latency (FWFT Mode)	60ns(2) + t_{REF} + 2 T_{RCLK}(4)	t_{FWL_2} = 10*Tf(3) + 3T_{RCLK}(4)(ns)	First word latency in the LA part is a fixed value, independent of the frequency of RCLK or WCLK.
Retransmit Latency (IDT Standard Mode)	60ns(2) + t_{REF} + 1 T_{RCLK}(4)	t_{RTF_1} = 14*Tf(3) + 3T_{RCLK}(4)(ns)	Retransmit latency in the LA part is a fixed value, independent of the frequency of RCLK or WCLK.
Retransmit Latency (FWFT Mode)	60ns(2) + t_{REF} + 2 T_{RCLK}(4)	t_{RTF_2} = 14*Tf(3) + 4T_{RCLK}(4)(ns)	Retransmit latency in the LA part is a fixed value, independent of the frequency of RCLK or WCLK.
I_{CC1}	55mA	100mA	Active supply current
I_{CC2}	20mA	10mA	Standby current
Typical I_{CC1}(5)	10 + 1.1*f_S + 0.02*C_L*fs(mA)	Not Given	Typical I_{CC1} Current calculation

NOTES:
1. WCLK and RCLK can vary independently and can be stopped. There is no restriction on operating WCLK and RCLK.
2. This is t_{SKEW3}.
3. Tf is the period of the 'selected clock'.
4. T_{RCLK} is the cycle period of the read clock.
5. Typical I_{CC1} is based on V_{CC} = 3.3V, t_A = 25°C, f_S = WCLK frequency = RCLK frequency (in MHz using TTL levels), data switching at f_S/2, C_L = Capacitive Load (in pF).

IDT and the IDT logo are registered trademarks of Integrated Device Technology, Inc and the SuperSyncFIFO is a trademark of Integrated Device Technology, Inc.

©2018 Integrated Device Technology, Inc. All rights reserved. Product specifications subject to change without notice.

Общество с ограниченной ответственностью «МосЧип» ИНН 7719860671 / КПП 771901001
Адрес: 105318, г.Москва, ул.Щербаковская д.3, офис 1107

Данный компонент на территории Российской Федерации

Вы можете приобрести в компании MosChip.

Для оперативного оформления запроса Вам необходимо перейти по данной ссылке:

http://moschip.ru/get-element

Вы можете разместить у нас заказ для любого Вашего проекта, будь то серийное производство или разработка единичного прибора.

В нашем ассортименте представлены ведущие мировые производители активных и пассивных электронных компонентов.

Нашей специализацией является поставка электронной компонентной базы двойного назначения, продукции таких производителей как XILINX, Intel (ex.ALTERA), Vicor, Microchip, Texas Instruments, Analog Devices, Mini-Circuits, Amphenol, Glenair.

Сотрудничество с глобальными дистрибьюторами электронных компонентов, предоставляет возможность заказывать и получать с международных складов практически любой перечень компонентов в оптимальные для Вас сроки.

На всех этапах разработки и производства наши партнеры могут получить квалифицированную поддержку опытных инженеров.

Система менеджмента качества компании отвечает требованиям в соответствии с ГОСТ Р ИСО 9001, ГОСТ РВ 0015-002 и ЭС РД 009

Офис по работе с юридическими лицами:

105318, г.Москва, ул.Щербаковская д.3, офис 1107, 1118, ДЦ «Щербаковский»

Телефон: +7 495 668-12-70 (многоканальный)

Факс: +7 495 668-12-70 (доб.304)

E-mail: info@moschip.ru

Skype отдела продаж:
moschip.ru
moschip.ru_4
moschip.ru_6
moschip.ru_9