THIS DRAWING IS UNPUBLISHED. RELEASED FOR PUBLICATION 20
© COPYRIGHT 20 BY - ALL RIGHTS RESERVED.

LOC	DIST
ES	00

REVISIONS

P	LTR	DESCRIPTION	DATE	DWN	APVD
	E1	REV PER ECR-12-012550	12JUL2012	AY	SZ

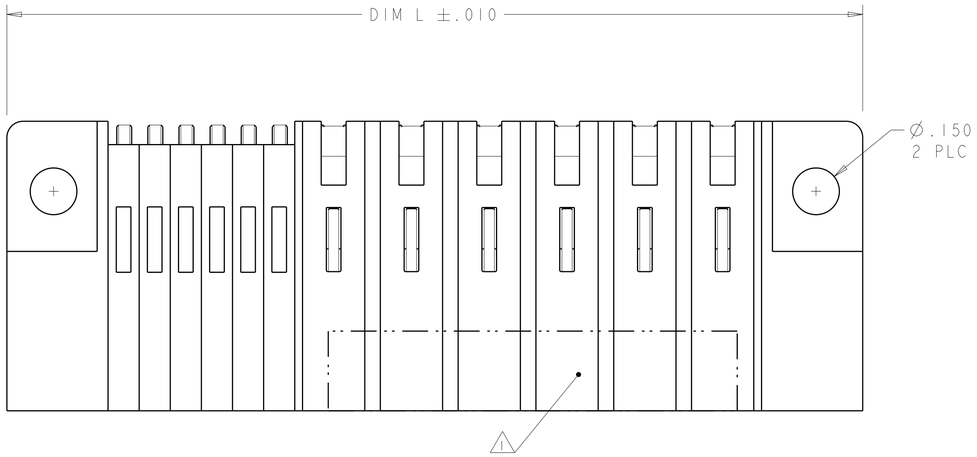

1. "AMP" PART NUMBER AND DATE CODE TO BE MARKED IN AREA SHOWN.
2. MATERIAL:
   HOUSING - GLASS FILLED HIGH TEMP THERMO PLASTIC, UL94 V-0
   SIGNAL CONTACT - COPPER ALLOY
   POWER CONTACT - HIGH CONDUCTIVITY COPPER ALLOY
3. CONTACT PLATING:
   SIGNAL CONTACT - .000050 MIN Ni UNDER ALL .000030 MIN. Au ON CONTACT AREA, .000100 MIN Sn AT PCB INTERFACE
   POWER CONTACT - .000050 MIN Ni UNDER ALL, .000030 MIN Au AT CONTACT AREA, .000100 MIN Sn AT PCB INTERFACE
4. MECHANICAL CONNECTOR KEEP OUT ZONE.
5. DATUM AND BASIC DIMENSIONS ESTABLISHED BY CUSTOMERS.
6. PCB - ALL HOLE DIAMETERS ARE FINISHED HOLE SIZES.
7. PCB - .045±.0010 DRILLED HOLES PLATED WITH .0003 MIN Sn OVER .001 TO .003 CU PLATING TO ACHIEVE A .040±.003 DIA. HOLE
8. NOT RELEASED FOR PRODUCTION.
9. VARIABLE DIMENSION SHOW ON VIEW (SHEET 3).

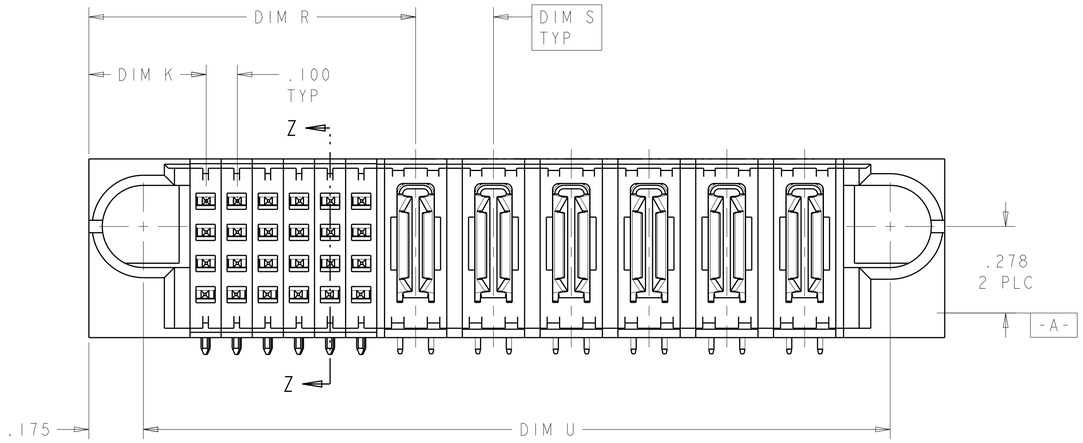

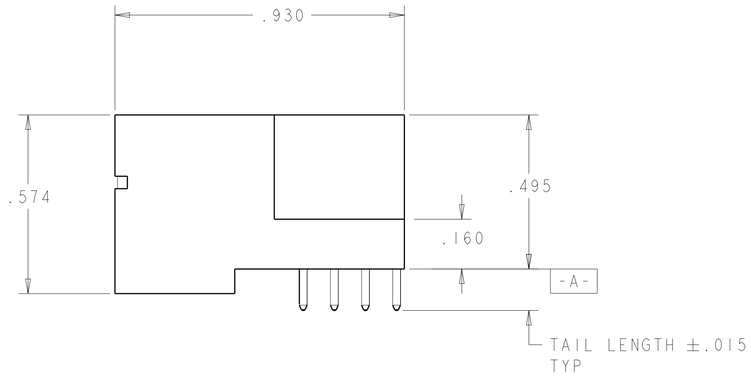

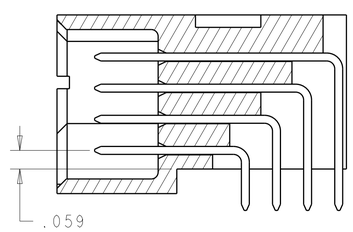

SECTION Z-Z

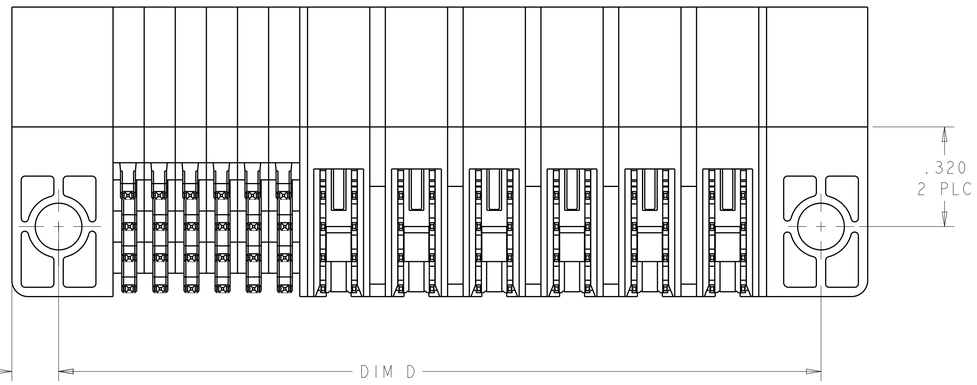

	DIM U	DIM S	DIM R	DIM D	DIM K	DIM L	DESCRIPTION	PART NUMBER
E1	3.400	.250	1.050	3.450	.375	3.750	24S + 10P	1-6600122-1
	3.325	.200	1.050	3.375	.375	3.675	24S + 12HDP	1-6600122-0
	2.600	9	1.075	2.650	.400	2.950	24S + 8P	6600122-9
	2.400	.250	1.050	2.450	.375	2.750	24S + 6P	6600122-8
	3.325	.200	1.050	3.375	.375	3.675	24S + 12HDP	6600122-7
	2.150	.200	1.050	2.200	.375	2.500	24S + 6P	6600122-6
	2.400	.250	1.050	2.450	.375	2.750	24S + 6P	6600122-5
	2.400	.250	1.050	2.450	.375	2.750	24S + 6P	6600122-1

THIS DRAWING IS A CONTROLLED DOCUMENT.

DIMENSIONS: INCHES

TOLERANCES UNLESS OTHERWISE SPECIFIED:
0 PLC ±-
1 PLC ±-
2 PLC ±.01
3 PLC ±.005
4 PLC ±.0020
ANGLES ±2°

MATERIAL 2
FINISH 3

DWN R GRZYBOWSKI 01MAR05
CHK M PERCHERKE 1MAR05
APVD -
PRODUCT SPEC 108-1973
APPLICATION SPEC 114-13038
WEIGHT -

TE Connectivity

NAME RIGHT ANGLE SOLDER HEADER ASSY, DUAL BEAM POWER CONTACT MULTI-BEAM XL

SIZE A1 | CAGE CODE 00779 | DRAWING NO C-6600122 | RESTRICTED TO -

Customer Drawing | SCALE 4:1 | SHEET 1 OF 5 | REV E1

THIS DRAWING IS UNPUBLISHED. RELEASED FOR PUBLICATION 20
© COPYRIGHT 20 BY - ALL RIGHTS RESERVED.

LOC	DIST
ES	00

REVISIONS

P	LTR	DESCRIPTION	DATE	DWN	APVD
	-	SEE SHEET 1	-	-	-

PART NUMBER	ROWS	SIGNAL 1	2	3	4	5	6	POWER P1	P2	P3	P4	P5	P6
6600122-1	D	J	J	J	J	J	J	PS	PS	PS	PS	PS	PS
	C	K	K	K	K	K	K						
	B	N	N	N	N	N	N						
	A	H	S	S	S	S	S						
24S + 6P													

PART NUMBER	ROWS	SIGNAL 1	2	3	4	5	6	POWER P1	P2	P3	P4	P5	P6
6600122-5	D	J	J	J	J	J	J	PS	PS	PS	PS	PS	PS
	C	K	K	K	K	K	K						
	B	N	N	N	N	N	N						
	A	S	S	S	S	S	S						
24S + 6P													

PART NUMBER	ROWS	SIGNAL 1	2	3	4	5	6	POWER P1	P2	P3	P4	P5	P6
6600122-8	D	J	J	J	J	E	J	PS	PS	PS	PS	PS	PS
	C	K	K	K	K	F	K						
	B	N	N	N	N	G	N						
	A	H	S	S	S	S	S						
24S + 6P		HD											HD

PART NUMBER	ROWS	SIGNAL 1	2	3	4	5	6	POWER P1	P2	P3	P4	P5	P6
6600122-6	D	J	J	J	J	J	J	PS	PS	PS	PS	PS	PS
	C	K	K	K	K	K	K						
	B	N	N	N	N	N	N						
	A	S	S	S	S	S	S						
24S + 6P													

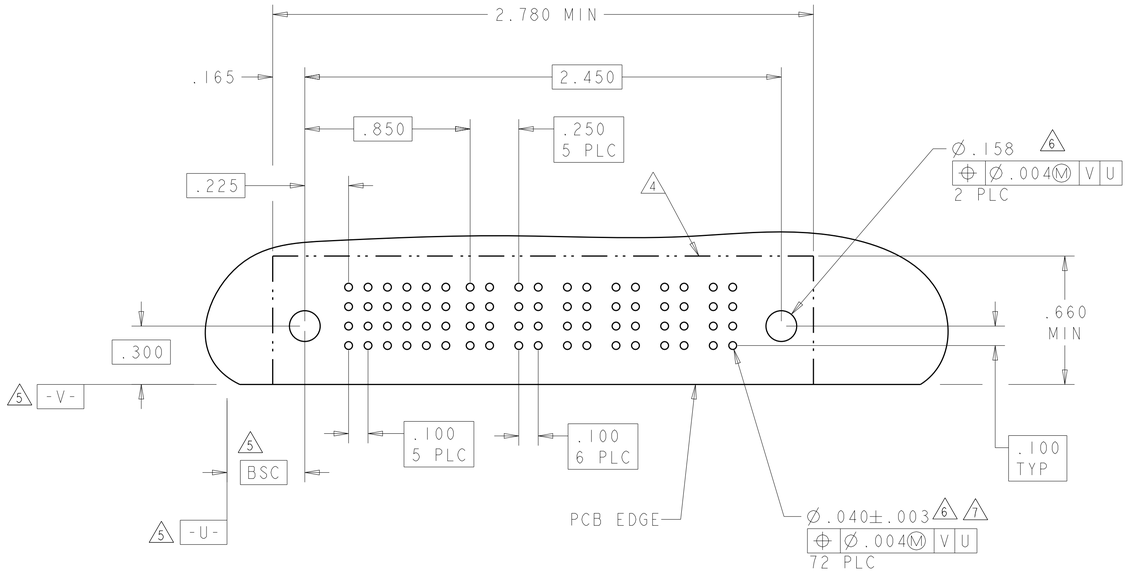

BOTH 6600122-1 & 6600122-5 & 6600122-8 HAVE THE SAME PCB LAYOUT

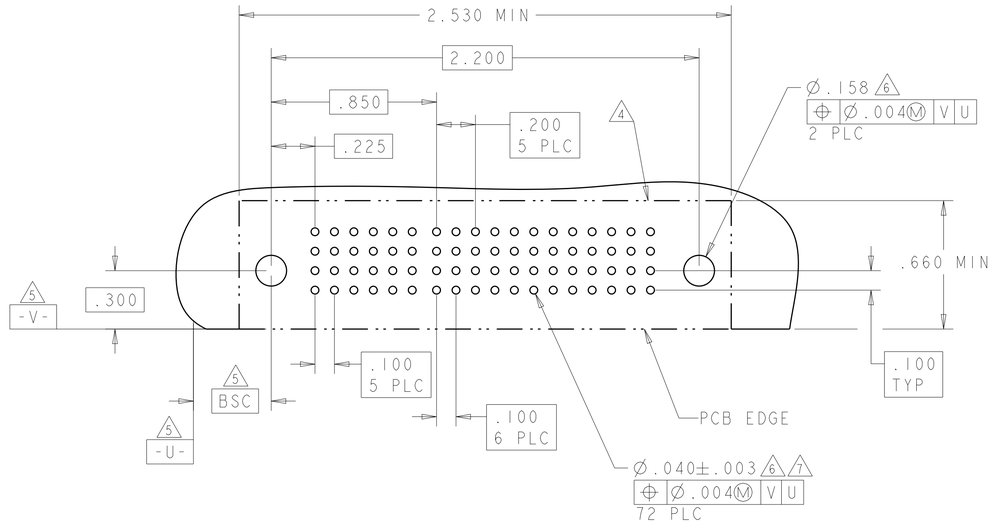

E	MLBF	.135	D
F	MLBF	.135	C
G	MLBF	.135	B
H	MLBF	.135	A
J	STD	.135	D
K	STD	.135	C
N	STD	.135	B
S	STD	.135	A
CODE	MATING SEQUENCE	TAIL LENGHT	ROW
SIGNAL CONTACT			

PS	.135
CODE	TAIL LENGTH
POWER CONTACT	

THIS DRAWING IS A CONTROLLED DOCUMENT.

DIMENSIONS: INCHES

TOLERANCES UNLESS OTHERWISE SPECIFIED:
0 PLC ±-
1 PLC ±-
2 PLC ±.01
3 PLC ±.005
4 PLC ±.0020
ANGLES ±2°

MATERIAL - -
FINISH - -

DWN 01MAR05 R GRZYBOWSKI
CHK 1MAR05 M PERCHERKE
APVD - -
PRODUCT SPEC 108-1973
APPLICATION SPEC 114-13038
WEIGHT - -

TE Connectivity

NAME RIGHT ANGLE SOLDER HEADER ASSY, DUAL BEAM POWER CONTACT MULTI-BEAM XL

SIZE	CAGE CODE	DRAWING NO	RESTRICTED TO
A1	00779	C-6600122	-

Customer Drawing | SCALE 4:1 | SHEET 2 OF 5 | REV E1

THIS DRAWING IS UNPUBLISHED. RELEASED FOR PUBLICATION 20
© COPYRIGHT 20 BY - ALL RIGHTS RESERVED.

LOC	DIST
ES	00

REVISIONS

P	LTR	DESCRIPTION	DATE	DWN	APVD
	-	SEE SHEET 1	-	-	-

PART NUMBER	ROWS	SIGNAL 1	2	3	4	5	6	POWER P1	P2	P3	P4	P5	P6	P7	P8	P9	P10	P11	P12
6600122-7	D	J	J	J	J	J	J	PS	PS	PS	PS	PS	PS	PS	PS	PS	PS	PS	PS
	C	K	K	K	K	K	K												
	B	N	N	N	N	N	N												
	A	S	S	S	S	S	S												
24S + 12HDP																			

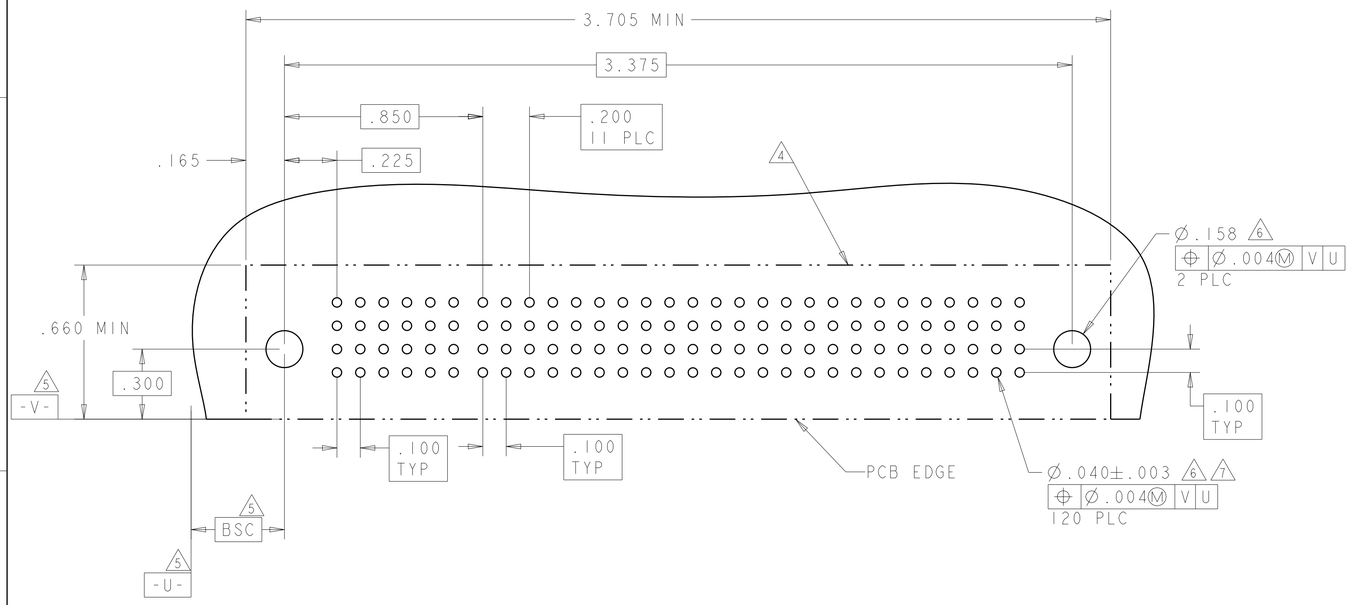

ASSY PART NUMBER	ROWS	SIGNAL 1	2	3	4	5	6	POWER P1	P2	P3	P4	P5	P6	P7	P8
6600122-9	D	J	J	J	J	J	J	PS	PS	PS	PS	PS	PS	PS	PS
	C	K	K	K	K	K	K								
	B	N	N	N	N	N	G								
	A	S	S	S	S	S	S								
24S + 8P															

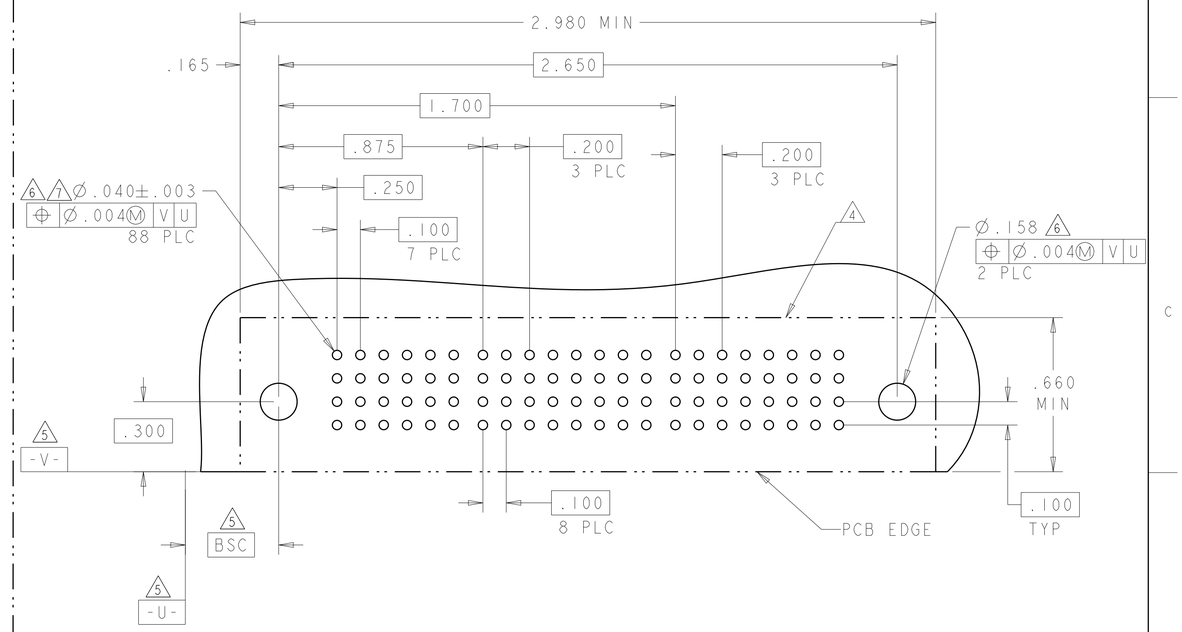

THIS DRAWING IS A CONTROLLED DOCUMENT.

DIMENSIONS: INCHES

TOLERANCES UNLESS OTHERWISE SPECIFIED:
0 PLC ±-
1 PLC ±-
2 PLC ±.01
3 PLC ±.005
4 PLC ±.0020
ANGLES ±2°

MATERIAL - -

FINISH - -

DWN R GRZYBOWSKI 01MAR05
CHK M PERCHERKE 1MAR05
APVD - -
PRODUCT SPEC 108-1973
APPLICATION SPEC 114-13038
WEIGHT -

TE Connectivity

NAME RIGHT ANGLE SOLDER HEADER ASSY, DUAL BEAM POWER CONTACT MULTI-BEAM XL

SIZE	CAGE CODE	DRAWING NO	RESTRICTED TO
A1	00779	C-6600122	-

Customer Drawing

SCALE	SHEET	OF	REV
4:1	3	5	E1

THIS DRAWING IS UNPUBLISHED. RELEASED FOR PUBLICATION 20
© COPYRIGHT 20 BY - ALL RIGHTS RESERVED.

LOC	DIST
ES	00

REVISIONS

P	LTR	DESCRIPTION	DATE	DWN	APVD
	-	SEE SHEET 1	-	-	-

PART NUMBER	ROWS	SIGNAL 1	SIGNAL 2	SIGNAL 3	SIGNAL 4	SIGNAL 5	SIGNAL 6	POWER P1	P2	P3	P4	P5	P6	P7	P8	P9	P10	P11	P12
1-6600122-0	D	J	J	J	J	J	E	PS	PS	PS	PS	PS	PS	PS	PS	PS	PS	PS	PS
	C	K	K	K	F	K	K												
	B	N	N	N	G	N	N												
	A	S	H	S	H	S	S												
24S + 12HDP																			

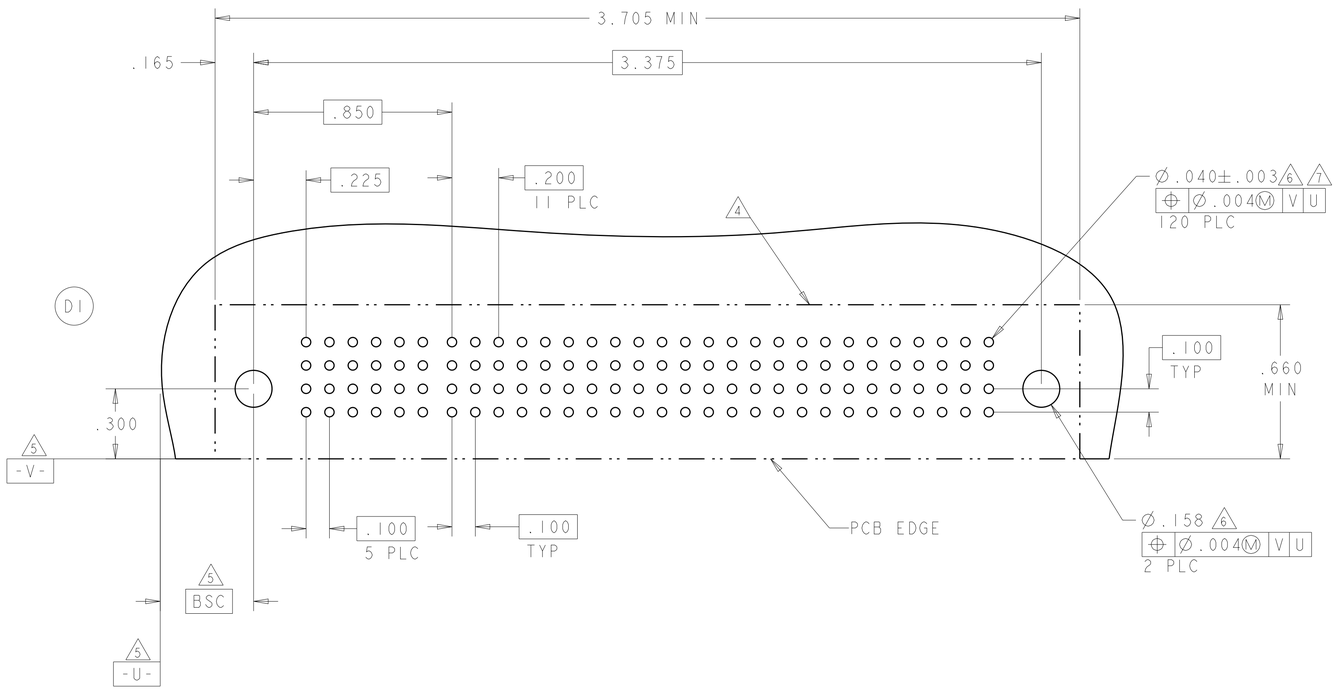

THIS DRAWING IS A CONTROLLED DOCUMENT.

DIMENSIONS: INCHES

TOLERANCES UNLESS OTHERWISE SPECIFIED:
0 PLC ±-
1 PLC ±-
2 PLC ±.01
3 PLC ±.005
4 PLC ±.0020
ANGLES ±2°

MATERIAL - -
FINISH - -

DWN R.GRZYBOWSKI 01MAR05
CHK M.PERCHERKE 1MAR05
APVD -
PRODUCT SPEC 108-1973
APPLICATION SPEC 114-13038
WEIGHT -

TE Connectivity

NAME RIGHT ANGLE SOLDER HEADER ASSY, DUAL BEAM POWER CONTACT MULTI-BEAM XL

SIZE	CAGE CODE	DRAWING NO	RESTRICTED TO
A1	00779	C-6600122	-

Customer Drawing

SCALE	SHEET	OF	REV
4:1	4	5	E1

4805 (3/11)

THIS DRAWING IS UNPUBLISHED. RELEASED FOR PUBLICATION 20
© COPYRIGHT 20 BY - ALL RIGHTS RESERVED.

LOC	DIST
ES	00

REVISIONS

P	LTR	DESCRIPTION	DATE	DWN	APVD
	-	SEE SHEET 1	-	-	-

E1

PART NUMBER	ROWS	SIGNAL 1	SIGNAL 2	SIGNAL 3	SIGNAL 4	SIGNAL 5	SIGNAL 6	POWER P1	P2	P3	P4	P5	P6	P7	P8	P9	P10
1-6600122-1	D	J	J	J	J	J	J	PS	PS	PS	PS	PS	PS	PS	PS	PS	PS
	C	K	K	K	K	K	K										
	B	N	N	N	N	N	N										
	A	S	S	S	S	S	S										
24S + 10P																	

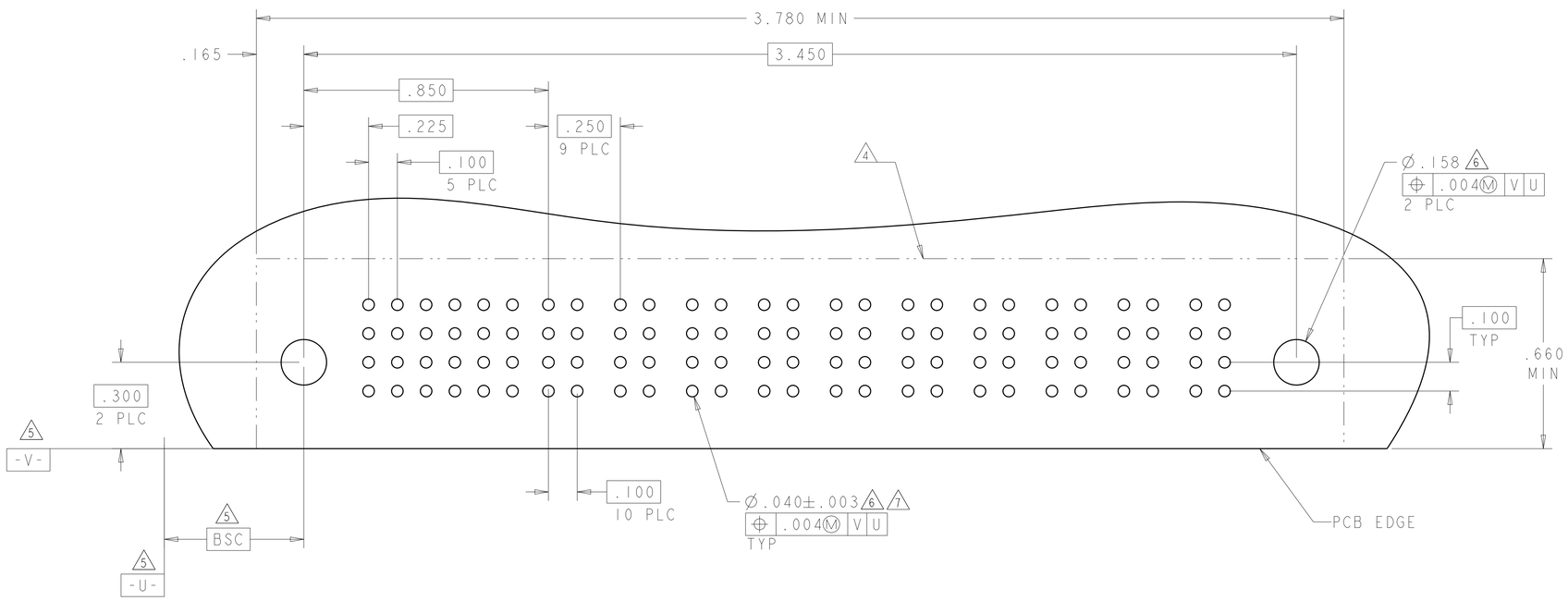

THIS DRAWING IS A CONTROLLED DOCUMENT.

DIMENSIONS: INCHES

TOLERANCES UNLESS OTHERWISE SPECIFIED:
0 PLC ±-
1 PLC ±-
2 PLC ±.01
3 PLC ±.005
4 PLC ±.0020
ANGLES ±2°

MATERIAL - -
FINISH - -

DWN R.GRZYBOWSKI 01MAR05
CHK M.PERCHERKE 1MAR05
APVD -
PRODUCT SPEC 108-1973
APPLICATION SPEC 114-13038
WEIGHT -

TE Connectivity

NAME RIGHT ANGLE SOLDER HEADER ASSY, DUAL BEAM POWER CONTACT MULTI-BEAM XL

SIZE	CAGE CODE	DRAWING NO.	RESTRICTED TO
A1	00779	C-6600122	-

Customer Drawing

SCALE	SHEET	OF	REV
4:1	5	5	E1

Общество с ограниченной ответственностью «МосЧип» ИНН 7719860671 / КПП 771901001
Адрес: 105318, г.Москва, ул.Щербаковская д.3, офис 1107

Данный компонент на территории Российской Федерации

Вы можете приобрести в компании MosChip.

Для оперативного оформления запроса Вам необходимо перейти по данной ссылке:

http://moschip.ru/get-element

Вы можете разместить у нас заказ для любого Вашего проекта, будь то серийное производство или разработка единичного прибора.

В нашем ассортименте представлены ведущие мировые производители активных и пассивных электронных компонентов.

Нашей специализацией является поставка электронной компонентной базы двойного назначения, продукции таких производителей как XILINX, Intel (ex.ALTERA), Vicor, Microchip, Texas Instruments, Analog Devices, Mini-Circuits, Amphenol, Glenair.

Сотрудничество с глобальными дистрибьюторами электронных компонентов, предоставляет возможность заказывать и получать с международных складов практически любой перечень компонентов в оптимальные для Вас сроки.

На всех этапах разработки и производства наши партнеры могут получить квалифицированную поддержку опытных инженеров.

Система менеджмента качества компании отвечает требованиям в соответствии с ГОСТ Р ИСО 9001, ГОСТ РВ 0015-002 и ЭС РД 009

Офис по работе с юридическими лицами:

105318, г.Москва, ул.Щербаковская д.3, офис 1107, 1118, ДЦ «Щербаковский»

Телефон: +7 495 668-12-70 (многоканальный)

Факс: +7 495 668-12-70 (доб.304)

E-mail: info@moschip.ru

Skype отдела продаж:
moschip.ru
moschip.ru_4
moschip.ru_6
moschip.ru_9