# IR Receiver Modules for Remote Control Systems

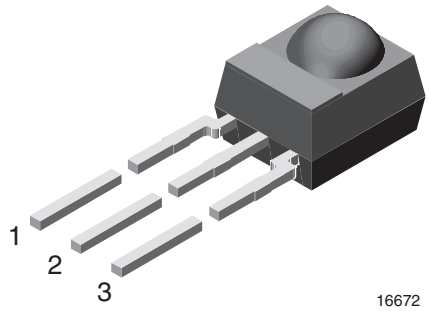


## FEATURES

- Improved dark sensitivity
- Improved immunity against optical noise
- Improved immunity against Wi-Fi noise
- Low supply current
- Photo detector and preamplifier in one package
- Internal filter for PCM frequency
- Supply voltage: 2.5 V to 5.5 V
- Insensitive to supply voltage ripple and noise
- Material categorization: for definitions of compliance please see www.vishay.com/doc?99912

Pb-free
e3
RoHS COMPLIANT
HALOGEN FREE
GREEN (5-2008)

## DESIGN SUPPORT TOOLS

click logo to get started

3D Models Available

## MECHANICAL DATA

**Pinning for TSOP14...:**

1 = OUT, 2 = GND, 3 = $V_S$

**Pinning for TSOP12...:**

1 = OUT, 2 = $V_S$, 3 = GND

## DESCRIPTION

The TSOP12... and TSOP14... series devices are the latest generation miniaturized IR receiver modules for infrared remote control systems. These series provide improvements in sensitivity to remote control signals in dark ambient as well as in sensitivity in the presence of optical disturbances e.g. from CFLs. The robustness against spurious pulses originating from Wi-Fi signals has been enhanced.

The devices contain a PIN diode and a preamplifier assembled on a lead frame. The epoxy package contains an IR filter. The demodulated output signal can be directly connected to a microprocessor for decoding.

The TSOP121.., TSOP123.., TSOP125.., TSOP141.., TSOP143.., and TSOP145.. series devices are designed to receive short burst codes (6 or more carrier cycles per burst). The third digit designates the AGC level (AGC1, AGC3, or AGC5) and the last two digits designate the band-pass frequency (see table below). The higher the AGC, the better noise is suppressed, but the lower the code compatibility. AGC1 provides basic noise suppression, AGC3 provides enhanced noise suppression and AGC5 provides maximized noise suppression. Generally, we advise to select the highest AGC that satisfactorily receives the desired remote code.

These components have not been qualified to automotive specifications.

**PARTS TABLE**

| AGC | | BASIC NOISE SUPPRESSION (AGC1) | | ENHANCED NOISE SUPPRESSION (AGC3) | | MAXIMIZED NOISE SUPPRESSION (AGC5) | |
|---|---|---|---|---|---|---|---|
| Carrier frequency | 30 kHz | TSOP14130 | TSOP12130 | TSOP14330 | TSOP12330 | TSOP14530 | TSOP12530 |
| | 33 kHz | TSOP14133 | TSOP12133 | TSOP14333 | TSOP12333 | TSOP14533 | TSOP12533 |
| | 36 kHz | TSOP14136 | TSOP12136 | TSOP14336 (1) | TSOP12336 (1) | TSOP14536 | TSOP12536 |
| | 38 kHz | TSOP14138 | TSOP12138 | TSOP14338 (2)(4) | TSOP12338 (2)(4) | TSOP14538 | TSOP12538 |
| | 40 kHz | TSOP14140 | TSOP12140 | TSOP14340 | TSOP12340 | TSOP14540 | TSOP12540 |
| | 56 kHz | TSOP14156 | TSOP12156 | TSOP14356 (3) | TSOP12356 (3) | TSOP14556 | TSOP12556 |
| Package | | Mold | | | | | |
| Pinning | | 1 = OUT, 2 = GND, 3 = $V_S$ | 1 = OUT, 2 = $V_S$, 3 = GND | 1 = OUT, 2 = GND, 3 = $V_S$ | 1 = OUT, 2 = $V_S$, 3 = GND | 1 = OUT, 2 = GND, 3 = $V_S$ | 1 = OUT, 2 = $V_S$, 3 = GND |
| Dimensions (mm) | | 6.0 W x 6.95 H x 5.6 D | | | | | |
| Mounting | | Leaded | | | | | |
| Application | | Remote control | | | | | |
| Best choice for | | (1) RCMM (2) RECS-80 Code (3) r-map (4) XMP-1, XMP-2 | | | | | |



THIS DOCUMENT IS SUBJECT TO CHANGE WITHOUT NOTICE. THE PRODUCTS DESCRIBED HEREIN AND THIS DOCUMENT ARE SUBJECT TO SPECIFIC DISCLAIMERS, SET FORTH AT www.vishay.com/doc?91000

## BLOCK DIAGRAM

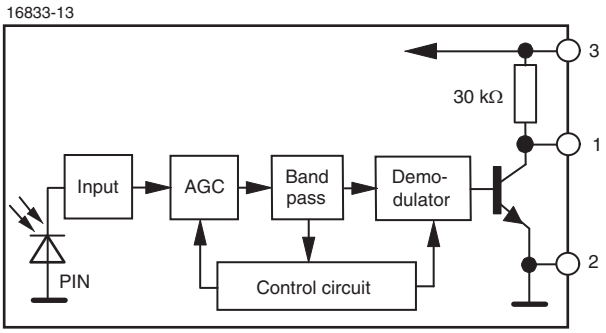


## APPLICATION CIRCUIT

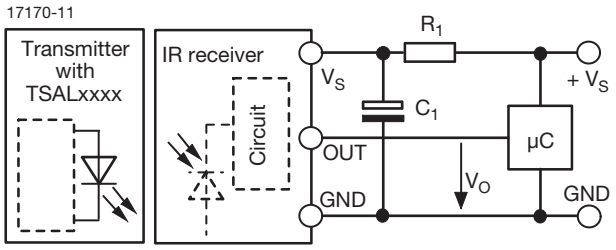


$R_1$ and $C_1$ recommended to reduce supply ripple for $V_S$ < 2.8 V

| ABSOLUTE MAXIMUM RATINGS | | | | |
|---|---|---|---|---|
| **PARAMETER** | **TEST CONDITION** | **SYMBOL** | **VALUE** | **UNIT** |
| Supply voltage | | $V_S$ | -0.3 to +6 | V |
| Supply current | | $I_S$ | 3 | mA |
| Output voltage | | $V_O$ | -0.3 to ($V_S$ + 0.3) | V |
| Output current | | $I_O$ | 5 | mA |
| Junction temperature | | $T_j$ | 100 | °C |
| Storage temperature range | | $T_{stg}$ | -25 to +85 | °C |
| Operating temperature range | | $T_{amb}$ | -25 to +85 | °C |
| Power consumption | $T_{amb} \leq 85$ °C | $P_{tot}$ | 10 | mW |
| Soldering temperature | t ≤ 10 s, 1 mm from case | $T_{sd}$ | 260 | °C |

**Note**

- Stresses beyond those listed under “Absolute Maximum Ratings” may cause permanent damage to the device. This is a stress rating only and functional operation of the device at these or any other conditions beyond those indicated in the operational sections of this specification is not implied. Exposure to absolute maximum rating conditions for extended periods may affect the device reliability

| ELECTRICAL AND OPTICAL CHARACTERISTICS ($T_{amb}$ = 25 °C, unless otherwise specified) | | | | | | |
|---|---|---|---|---|---|---|
| **PARAMETER** | **TEST CONDITION** | **SYMBOL** | **MIN.** | **TYP.** | **MAX.** | **UNIT** |
| Supply current | $E_v$ = 0, $V_S$ = 3.3 V | $I_{SD}$ | 0.55 | 0.70 | 0.90 | mA |
| | $E_v$ = 40 klx, sunlight | $I_{SH}$ | - | 0.80 | - | mA |
| Supply voltage | | $V_S$ | 2.5 | - | 5.5 | V |
| Transmission distance | $E_v$ = 0, test signal see Fig. 1, IR diode TSAL6200, $I_F$ = 50 mA | d | - | 30 | - | m |
| Output voltage low | $I_{OSL}$ = 0.5 mA, $E_e$ = 0.7 mW/m$^2$, test signal see Fig. 1 | $V_{OSL}$ | - | - | 100 | mV |
| Minimum irradiance | Pulse width tolerance: $t_{pi}$ - 3.0/$f_0$ < $t_{po}$ < $t_{pi}$ + 3.5/$f_0$, test signal see Fig. 1 | $E_{e\ min.}$ | - | 0.08 | 0.15 | mW/m$^2$ |
| Maximum irradiance | $t_{pi}$ - 3.0/$f_0$ < $t_{po}$ < $t_{pi}$ + 3.5/$f_0$, test signal see Fig. 1 | $E_{e\ max.}$ | 30 | - | - | W/m$^2$ |
| Directivity | Angle of half transmission distance | $\varphi_{1/2}$ | - | ± 45 | - | deg |



THIS DOCUMENT IS SUBJECT TO CHANGE WITHOUT NOTICE. THE PRODUCTS DESCRIBED HEREIN AND THIS DOCUMENT ARE SUBJECT TO SPECIFIC DISCLAIMERS, SET FORTH AT www.vishay.com/doc?91000

**TYPICAL CHARACTERISTICS** ($T_{amb}$ = 25 °C, unless otherwise specified)

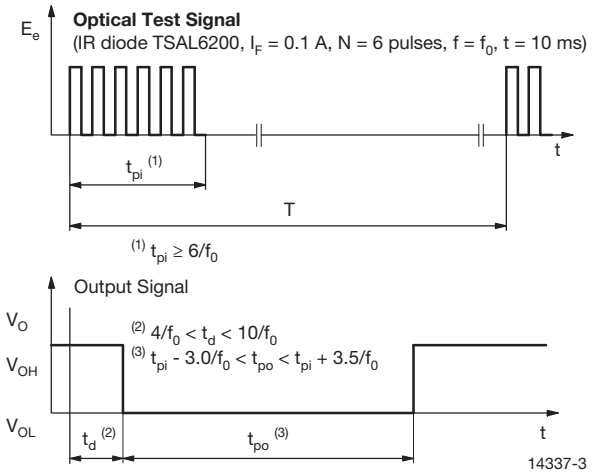


Fig. 1 - Output Delay and Pulse-Width

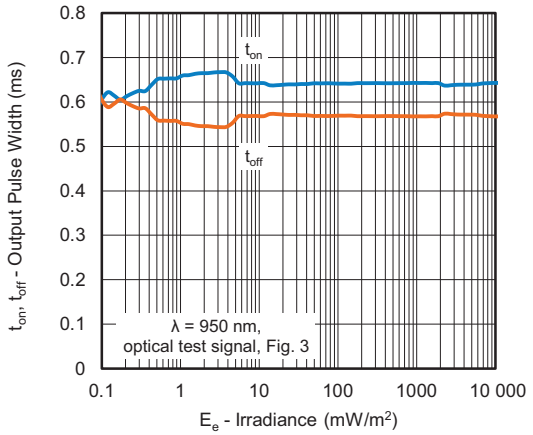


Fig. 4 - Pulse-Width vs. Irradiance in Dark Ambient

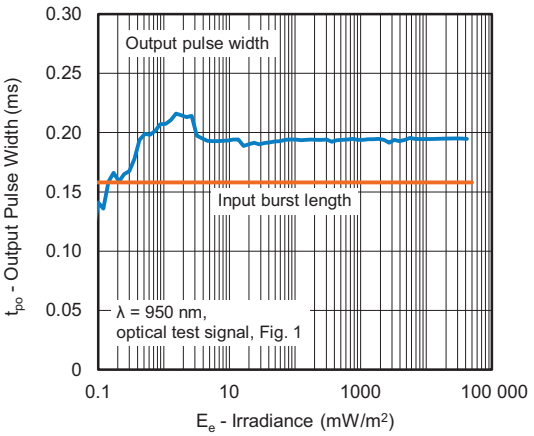


Fig. 2 - Pulse-Width vs. Irradiance in Dark Ambient

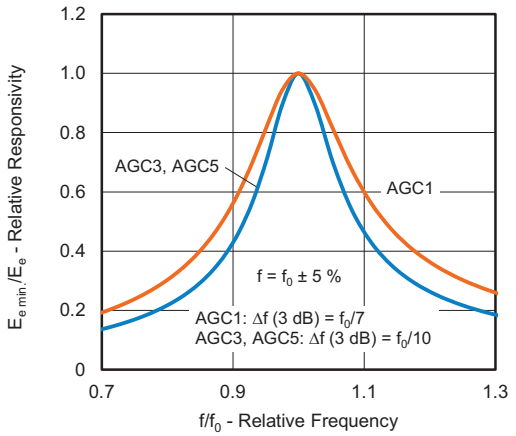


Fig. 5 - Frequency Dependence of Responsivity

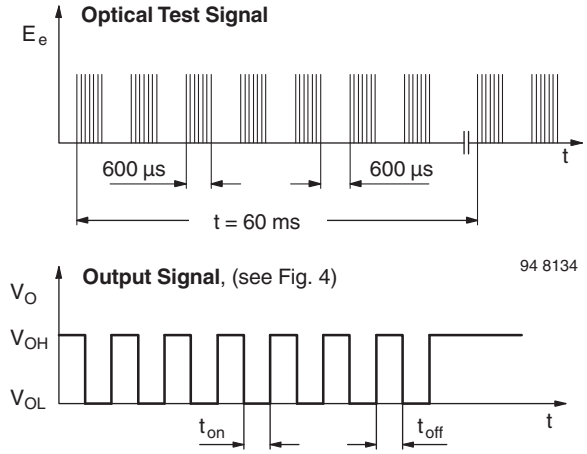


Fig. 3 - Test Signal

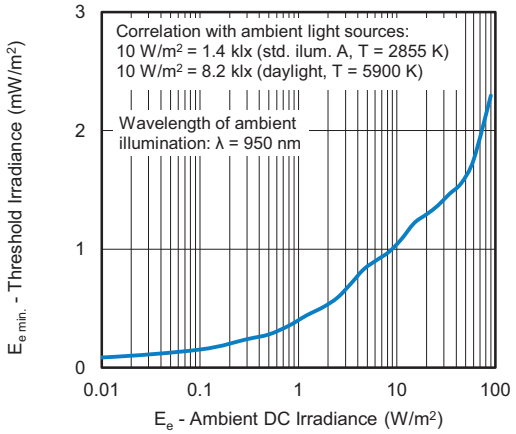


Fig. 6 - Sensitivity in Bright Ambient



THIS DOCUMENT IS SUBJECT TO CHANGE WITHOUT NOTICE. THE PRODUCTS DESCRIBED HEREIN AND THIS DOCUMENT ARE SUBJECT TO SPECIFIC DISCLAIMERS, SET FORTH AT www.vishay.com/doc?91000

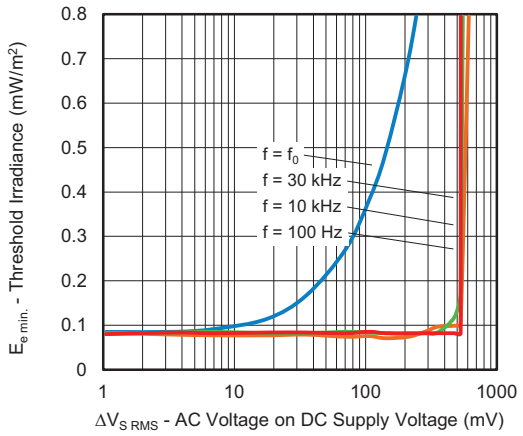


Fig. 7 - Sensitivity vs. Supply Voltage Disturbances

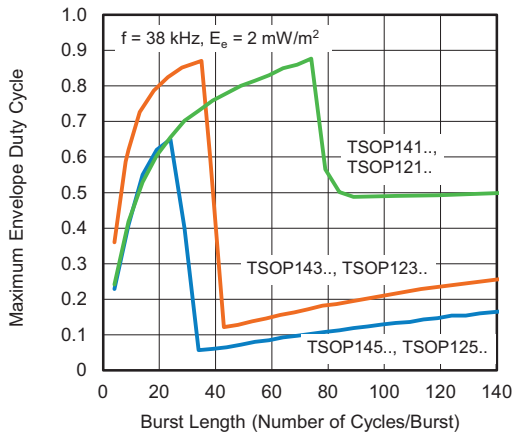


Fig. 8 - Maximum Envelope Duty Cycle vs. Burst Length

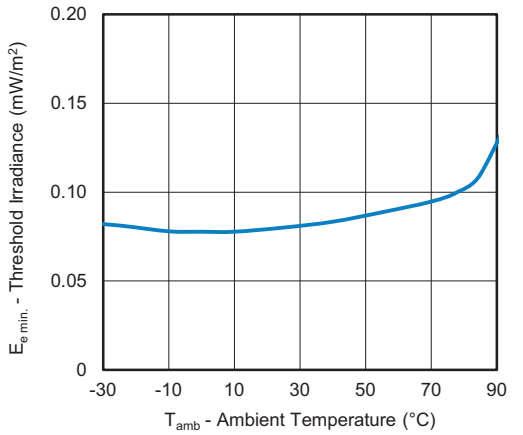


Fig. 9 - Sensitivity vs. Ambient Temperature

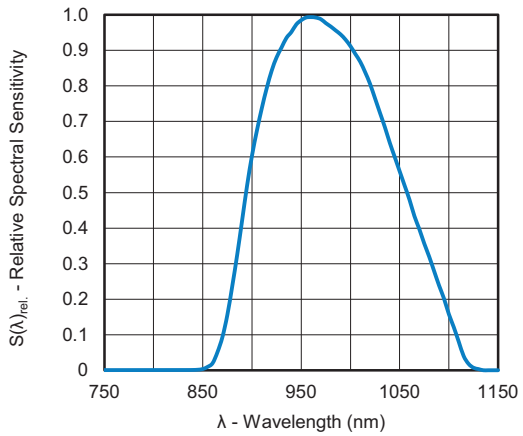


Fig. 10 - Relative Spectral Sensitivity vs. Wavelength

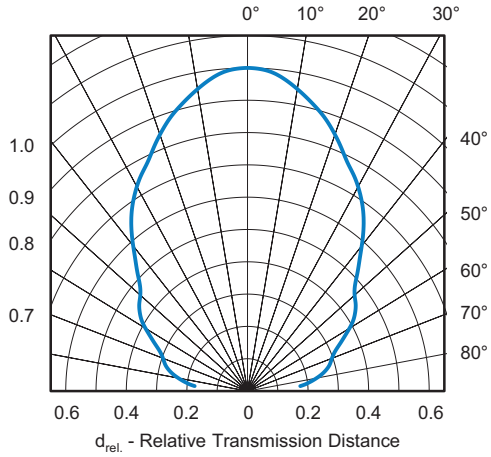


Fig. 11 - Directivity

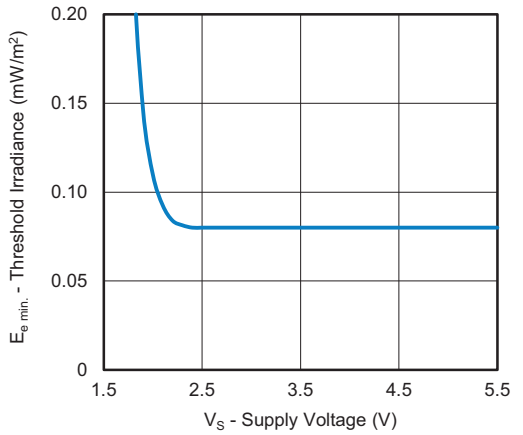


Fig. 12 - Sensitivity vs. Supply Voltage



THIS DOCUMENT IS SUBJECT TO CHANGE WITHOUT NOTICE. THE PRODUCTS DESCRIBED HEREIN AND THIS DOCUMENT ARE SUBJECT TO SPECIFIC DISCLAIMERS, SET FORTH AT www.vishay.com/doc?91000

## SUITABLE DATA FORMAT

This series is designed to suppress spurious output pulses due to noise or disturbance signals. The devices can distinguish data signals from noise due to differences in frequency, burst length, and envelope duty cycle. The data signal should be close to the device's band-pass center frequency (e.g. 38 kHz) and fulfill the conditions in the table below.

When a data signal is applied to the product in the presence of a disturbance, the sensitivity of the receiver is automatically reduced by the AGC to insure that no spurious pulses are present at the receiver's output. Some examples which are suppressed are:

- DC light (e.g. from tungsten bulbs sunlight)
- Continuous signals at any frequency
- Strongly or weakly modulated patterns from fluorescent lamps with electronic ballasts (see Fig. 13 or Fig. 14).
- 2.4 GHz and 5 GHz Wi-Fi

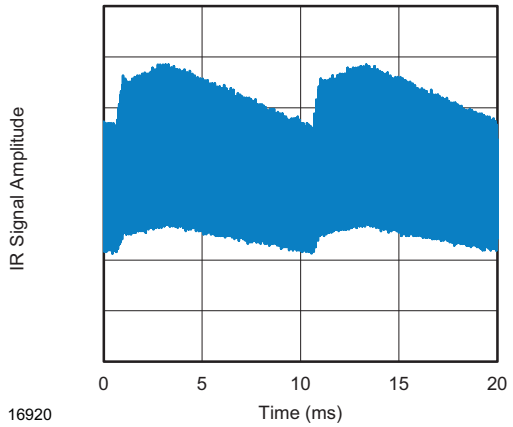


Fig. 13 - IR Emission from Fluorescent Lamp With Low Modulation

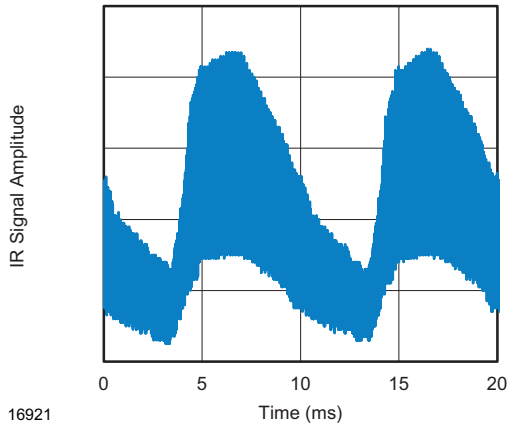


Fig. 14 - IR Emission from Fluorescent Lamp With High Modulation

| | TSOP121.., TSOP141.. | TSOP123.., TSOP143.. | TSOP125.., TSOP145.. |
|---|---|---|---|
| Minimum burst length | 6 cycles/burst | 6 cycles/burst | 6 cycles/burst |
| After each burst of length<br>A gap time is required of | 6 to 70 cycles<br>≥ 10 cycles | 6 to 35 cycles<br>≥ 10 cycles | 6 to 24 cycles<br>≥ 10 cycles |
| For bursts greater than<br>a minimum gap time in the data stream is needed of | 70 cycles<br><br>> 1 x burst length | 35 cycles<br><br>> 6 x burst length | 24 cycles<br><br>> 25 ms |
| Maximum number of continuous short bursts/second | 1800 | 2800 | 1800 |
| RCMM code | Yes | Preferred | Yes |
| XMP-1 code | Yes | Preferred | Yes |
| r-map code | Yes | Preferred | Yes |
| Suppression of interference from fluorescent lamps | Fig. 13 | Fig. 13 and Fig. 14 | Fig. 13 and Fig. 14 |

**Note**

- For data formats with long bursts (more than 10 carrier cycles) please see the datasheet for TSOP122.., TSOP124.., TSOP126.., TSOP142.., TSOP144.., TSOP146..



THIS DOCUMENT IS SUBJECT TO CHANGE WITHOUT NOTICE. THE PRODUCTS DESCRIBED HEREIN AND THIS DOCUMENT ARE SUBJECT TO SPECIFIC DISCLAIMERS, SET FORTH AT www.vishay.com/doc?91000

**PACKAGE DIMENSIONS** in millimeters

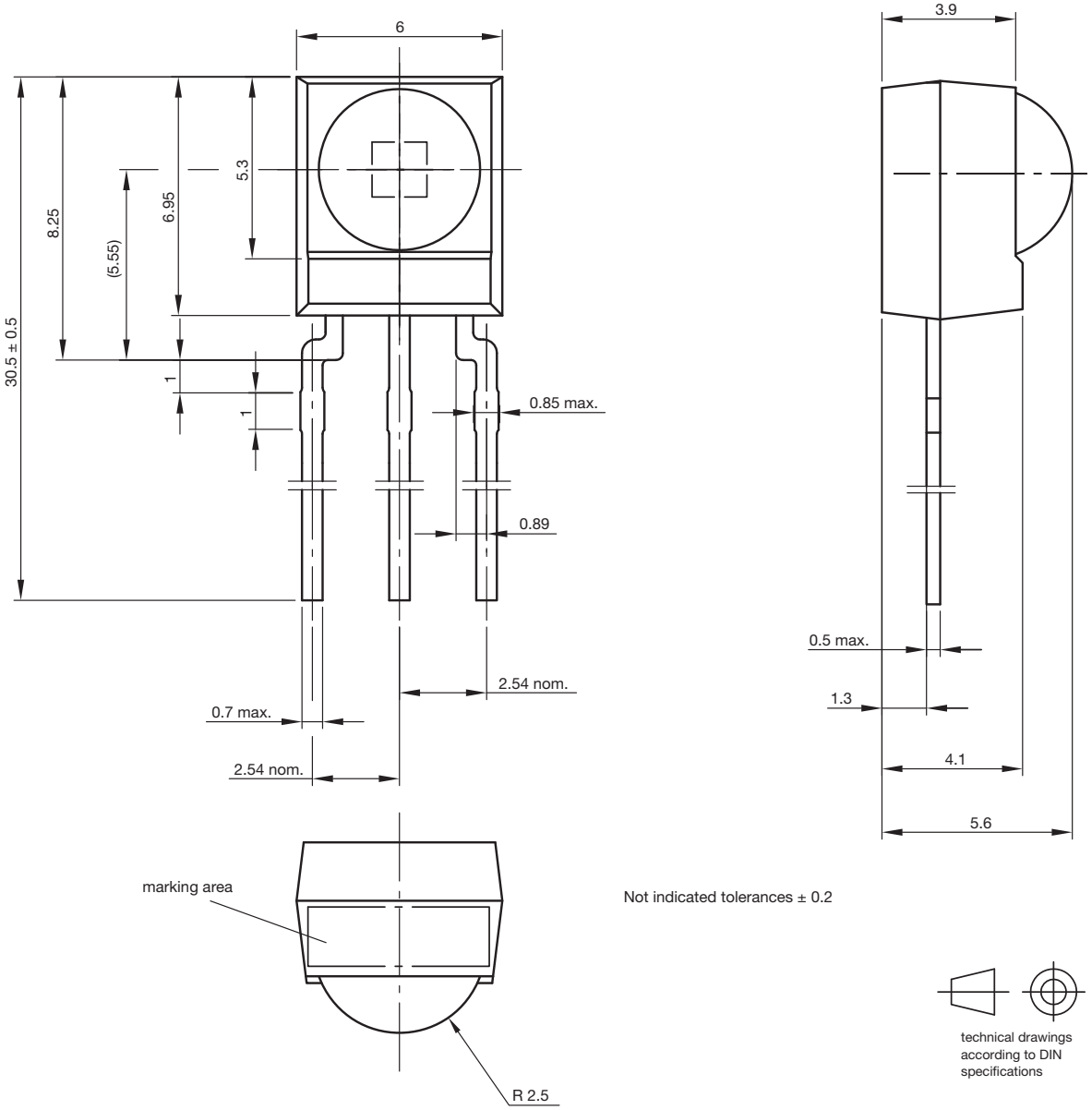


Drawing-No.: 6.550-5169.01-4
Issue: 9; 03.11.10
13655



THIS DOCUMENT IS SUBJECT TO CHANGE WITHOUT NOTICE. THE PRODUCTS DESCRIBED HEREIN AND THIS DOCUMENT ARE SUBJECT TO SPECIFIC DISCLAIMERS, SET FORTH AT www.vishay.com/doc?91000

# Disclaimer

ALL PRODUCT, PRODUCT SPECIFICATIONS AND DATA ARE SUBJECT TO CHANGE WITHOUT NOTICE TO IMPROVE RELIABILITY, FUNCTION OR DESIGN OR OTHERWISE.

Vishay Intertechnology, Inc., its affiliates, agents, and employees, and all persons acting on its or their behalf (collectively, "Vishay"), disclaim any and all liability for any errors, inaccuracies or incompleteness contained in any datasheet or in any other disclosure relating to any product.

Vishay makes no warranty, representation or guarantee regarding the suitability of the products for any particular purpose or the continuing production of any product. To the maximum extent permitted by applicable law, Vishay disclaims (i) any and all liability arising out of the application or use of any product, (ii) any and all liability, including without limitation special, consequential or incidental damages, and (iii) any and all implied warranties, including warranties of fitness for particular purpose, non-infringement and merchantability.

Statements regarding the suitability of products for certain types of applications are based on Vishay's knowledge of typical requirements that are often placed on Vishay products in generic applications. Such statements are not binding statements about the suitability of products for a particular application. It is the customer's responsibility to validate that a particular product with the properties described in the product specification is suitable for use in a particular application. Parameters provided in datasheets and / or specifications may vary in different applications and performance may vary over time. All operating parameters, including typical parameters, must be validated for each customer application by the customer's technical experts. Product specifications do not expand or otherwise modify Vishay's terms and conditions of purchase, including but not limited to the warranty expressed therein.

Except as expressly indicated in writing, Vishay products are not designed for use in medical, life-saving, or life-sustaining applications or for any other application in which the failure of the Vishay product could result in personal injury or death. Customers using or selling Vishay products not expressly indicated for use in such applications do so at their own risk. Please contact authorized Vishay personnel to obtain written terms and conditions regarding products designed for such applications.

No license, express or implied, by estoppel or otherwise, to any intellectual property rights is granted by this document or by any conduct of Vishay. Product names and markings noted herein may be trademarks of their respective owners.

*© 2017 VISHAY INTERTECHNOLOGY, INC. ALL RIGHTS RESERVED*

Общество с ограниченной ответственностью «МосЧип» ИНН 7719860671 / КПП 771901001
Адрес: 105318, г.Москва, ул.Щербаковская д.3, офис 1107

**Данный компонент на территории Российской Федерации**

**Вы можете приобрести в компании MosChip.**

Для оперативного оформления запроса Вам необходимо перейти по данной ссылке:

http://moschip.ru/get-element

Вы можете разместить у нас заказ для любого Вашего проекта, будь то серийное производство или разработка единичного прибора.

В нашем ассортименте представлены ведущие мировые производители активных и пассивных электронных компонентов.

Нашей специализацией является поставка электронной компонентной базы двойного назначения, продукции таких производителей как XILINX, Intel (ex.ALTERA), Vicor, Microchip, Texas Instruments, Analog Devices, Mini-Circuits, Amphenol, Glenair.

Сотрудничество с глобальными дистрибьюторами электронных компонентов, предоставляет возможность заказывать и получать с международных складов практически любой перечень компонентов в оптимальные для Вас сроки.

На всех этапах разработки и производства наши партнеры могут получить квалифицированную поддержку опытных инженеров.

Система менеджмента качества компании отвечает требованиям в соответствии с ГОСТ Р ИСО 9001, ГОСТ РВ 0015-002 и ЭС РД 009

**Офис по работе с юридическими лицами:**

105318, г.Москва, ул.Щербаковская д.3, офис 1107, 1118, ДЦ «Щербаковский»

Телефон: +7 495 668-12-70 (многоканальный)

Факс: +7 495 668-12-70 (доб.304)

E-mail: info@moschip.ru

Skype отдела продаж:
moschip.ru
moschip.ru_4
moschip.ru_6
moschip.ru_9