ABSOLUTE MULTI-TURN ENCODER | HMT25

Introduction

The HMT25 geared multi-turn encoder provides absolute position information over multiple turns of the input shaft. It keeps track of the exact position even during periods of power loss without the need for a battery backup. The HMT25 series is capable of outputs up to 4096 counts per turn and can count up to 4096 turns—a total of 24 bits or 16,777,216 positions. Units are enclosed in a 2.5- inch diameter sealed package to withstand rugged environments and they carry an IP 66 environmental rating. These encoders meet the long travel and high resolution requirements of robotics, rolling mills, rotary tables, cable winding, printing, converting and material handling systems.

SPECIFICATIONS

Mechanical

Shaft Diameter:	0.375" (0.5" optional)
Flat on Shaft	0.80" long x 0.030" deep
Shaft Loading	40 lbs axial, 36 lbs radial (90 lbs axial and 80 lbs radial with 0.5" shaft)
Shaft Runout	0.0005 TIR at midpoint of shaft
Starting Torque at 25°C	2.5 in-oz (max)
Bearings	Dual, preloaded, Class ABEC 7
Shaft Material	416 stainless steel
Bearing Housing	Die cast aluminum with protective finish
Cover	Die cast aluminum
Bearing Life	1×10^{10} at 10% rated load
Maximum RPM	6,000 (see frequency response, below)
Moment of Inertia	4.3×10^{-4} oz-in-sec^2
Weight	16 oz nominal

Electrical

Code	Natural binary, gray code or SSI
Counts per Shaft Turn	4096, 12 bits
Number of Turns	up to 4096, 12 bits
Supply Voltage	5–28 VDC
Current Requirements	130 mA typical + load, 250mA (max)

Copyright © 2018 Sensata Technologies, Inc.

Voltage/Output	(See note 3) 28V/V: Line Driver, 5–28 VDC in, $V_{out} = V_{in}$ 28V/5: Line Driver, 5–28 VDC in, V_{out} = 5 VDC 28V/OC: Open Collector, 5–28 VDC in, OC_{out} SSI: 5–28 VDCin/5Vout (see back page)
Frequency Response	100 kHz
Protection Level	Overvoltage, reverse voltage. Outputs short-circuit protected (1 minute max)
Output Termination Pinouts	See Tables, below

Enviromental

Enclosure Rating	IP66
Temperature	Operating, 0° to 70° C; Extended, -40° to +85°C; Storage, -20° to 90° C (to -40° if extended range is called out)
Shock	50 g's 11 msec
Vibration	0.3 g's ramp to 20 g's from 5 to 40 Hz and 20 g's from 40 Hz to 2000 Hz
Humidity	98% Non-condensing

NOTES & TABLES: All notes and tables referred to in the text can be found at the end of this specification.

HMT25 OUTPUT TERMINATIONS FOR PARALLEL OUTPUT[1]

PIN	FUNCTION[2]	PIN	FUNCTION[2]	PIN	FUNCTION[2]	PIN	FUNCTION[2]
A	T11(MSB)	**J**	T3	**T**	F7	**b**	N/C
B	T10	**K**	T2	**U**	F6	**c**	LATCH
C	T9	**L**	T1	**V**	F5	**d**	DIR CONTROL
D	T8	**M**	T0	**W**	F4	**e**	ENABLE (Option)
E	T7	**N**	F11 (MSB)	**X**	F3	**f**	N/C
F	T6	**P**	F10	**Y**	F2	**g**	0 V
G	T5	**R**	F9	**Z**	F1	**h**	+ V
H	T4	**S**	F8	**a**	F0 (LSB)	**j**	CASE GND

(1) Parallel output uses a MS3112E18-32P, 32 Pin connector on the encoder body (2) TXX = Turns counts, FXX = Fine resolution counts

Copyright © 2018 Sensata Technologies, Inc.

HMT25 OUTPUT TERMINATIONS FOR OPTIONAL 24 BIT SSI OUPUT

FUNCTION	CABLE	CONNECTOR	TERM BOARD (H38 & H40 ONLY)	
			H38	H40
DATA +	YEL	A	4	1
DATA -	WHT/YEL	H	7	7
CLOCK +	BLU	B	5	2
CLOCK -	WHT/BLU	I	8	8
DIRECTION OF COUNT	ORN	C	6	3
ENABLE (Optional)	VIOLET	E	9	-
RESET (Optional)	WHT/ORN	J	10	9
+V (SUPPLY VOLTAGE)	RED	D	3	4
0V (CIRCUIT COMMON)	BLK	F	2	5
CASE GROUND	GRN	G	1	6

*Connector is an MS3102E18-1P, 10-pin connector on the encoder body and mates to an MS3106F18- 1S connector or can be used with a standard cable/ connector assembly, BEI part 924-31186-18XX. (Where XX = 10, 20, or 30 for a 10, 20 or 30 foot cable length.)

Direction of Count: The HMT25 comes standard with a Direction of Count bit. Normal operation is CW increasing count when viewed from the shaft end. This pin is normally pulled HI internally. To reverse the count direction, this pin must be pulled LO (Circuit Common). Optionally this can be designated as CCW increasing count when HI, in which case LO will be CW increasing count.
Latch: Outputs are active and provide continuous information when this pin is HI. When this pin is pulled LO (Circuit Common) the outputs are latched at the logic state that is present when the latch is applied and will stay latched until this pin is no longer LO. This pin is pulled HI internally.
Enable (optional): This option allows the operator to momentarily deactivate the outputs from the encoder. This may be useful in instances where the outputs from several different encoders must be sampled independently. Output is active when this pin is HI. When pulled LO (Circuit Common) all outputs go to high impedance state (Tristate) and are inactive until the LO state is removed. This pin is pulled HI internally. To order this option on the HMT25 make sure the model number has –S on the end, followed by the description, –S = output enable.
RESET (Optional): The Reset pin (Pin J) is normally HI and is pulled up internally to the positive supply voltage. To activate the Reset function, Pin J must be pulled LO by connecting it to signal common for 1 second or greater. This causes the present encoder position to be stored into non-volatile memory as an offset value and the output of the encoder is then set to the value of "0". The encoder will retain this offset even if the power is turned off and on again. A new "0" position can be set by rotating the encoder shaft to a new position and then activating the Reset pin again. To order this option for the HMT25, make sure the model number has –S on the end followed by the description, –S = Reset.

24 BIT, SSI COMPATIBLE OUTPUT TIMING

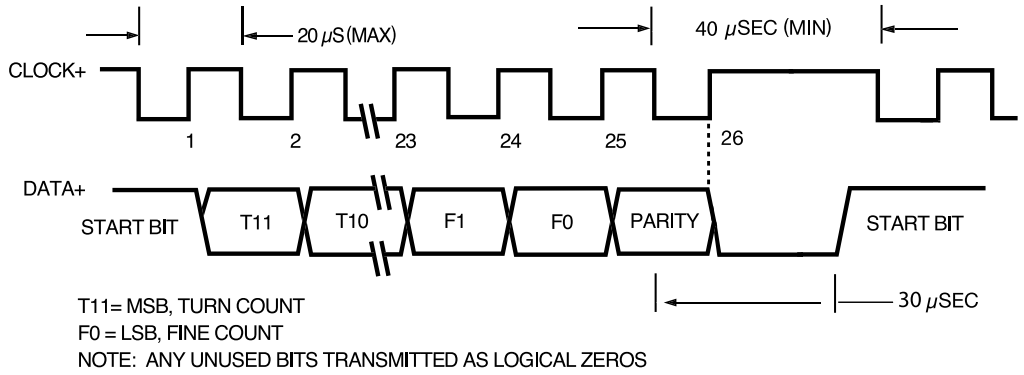

Copyright © 2018 Sensata Technologies, Inc.

DIMENSIONS

Tolerance, unless otherwise noted:
All dimensions are in: in

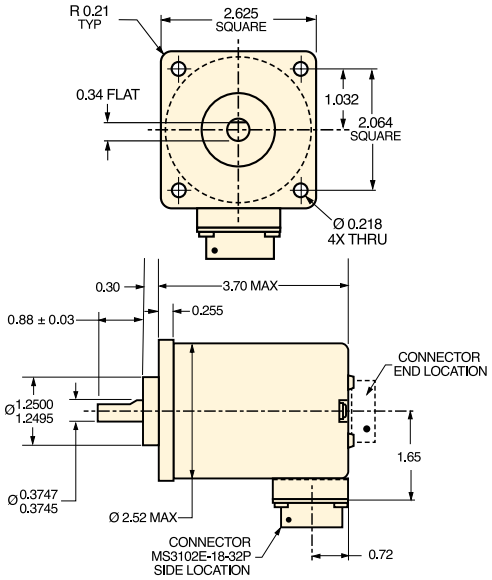

Copyright © 2018 Sensata Technologies, Inc.

ORDERING REFERENCE

Example : HMT25D-SS-12X12GC-28V/V-CW-SM18/32

Use this diagram, working from left to right to construct your model number

HMT25 _ - - - **X** - - - - - -

Type

Heavy Duty Multi-trun 2.5 inch Dia.

Housing

D = Square Flange
E = Servo mount

Face Mounts

F1 = 3,10–32,1.875 BC
F4 = 3, 6–32, 2.00 BC

Shaft Seal Configuration

SS = Shaft Seal See note 2

Counts Per Turn

12 = 4096 counts

Number of Turns

4 = 16 turns
8 = 256 turns
12 = 4 096 turns

Code Type

GC = Gray Code
NB = Natural Binary

Voltage/Output

28V/V = 5–28Vin/out
28V/5 = 5–28Vin/5Vout
28V/OC = 5–28Vin/OCout
S3 = SSI Compatible
A1 = 4–20mA
A2 = 0–10V

Direction of Count

CW = Clockwise increasing count
CCW = Counter clockwise increasing count

Output Termination

E = End
S = Side

Connector

M18/32 = 32 pin Parallel output
M18 = 10 pin (A1, A2 and S3 only)

Special Features

S= Special features specified on purchase order (consult factory) See note 4

Copyright © 2018 Sensata Technologies, Inc.

NOTES

1. Mounting is usually done either using the D-style square flange mount, E- or G-style servo mounts, or one of the standard face mounts, F1 for example. Consult factory for additional face mount options.
2.The shaft seal is recommended in virtually all installations. The most common exceptions are applications requiring a very low starting torque or those requiring operation at both high temperature and high speed.
3. Output IC's: Output IC's are available as either Line Driver (LD) or NPN Open Collector (OC) types. Open Collectors require pull-up resistors, resulting in higher output source impedance (sink impedance is similar to that of line drivers). In general, use of a Line Driver style output is recommended. Line Drivers source or sink current and their lower impedance mean better noise immunity and faster switching times. **Warning:** Do not connect any line driver outputs directly to circuit common/OV, which may damage the driver. Unused outputs should be isolated and left floating. Our applications specialists would be pleased to discuss your system requirements and the compatibility of your receiving electronics with Line Driver type outputs.
28V/V: Multi-voltage Line Driver (7272*): 100 mA source/sink. Input voltage 5 to 28 VDC +/- 5% standard (Note: Vout = Vin). This driver is TTL compatible when used with 5 volt supply. Supply lines are protected against overvoltage to 60 volts and reverse voltage. Outputs are short circuit protected for one minute. Supply current is 120 mA typical (plus load current). This is the recommended replacement for 3904R and 7406R open collector outputs with internal pullup resistors. It is also a direct replacement for any 4469, 88C30, 8830 or 26LS31 line driver.
28V/5: Multi-voltage Line Driver (7272*): 100 mA source/sink. Input voltage 5 to 28 VDC +/- 5% standard, internally regulated with 5V (TTL compatible) logic out. Supply lines are protected against overvoltage to 60 volts and reverse voltage. Outputs are short circuit protected for one minute. Supply current is 90 mA typical (plus load current). **Note:** Limit encoder load to 2.5W max at ambient. Example at 12 VDC: 2.5W/ (+12VDC minus +5VDC) = 357 mA total allowed current. Consult factory for your specific requirements.
28V/OC: NPN Open Collector (3904*, 7273*). Current sink of 80 mA max. Current sourced by external pull- up resistor. Output can be pulled up to voltage other than supply voltage (30 V max). Input voltage 5 to 28 VDC +/- 5% standard. Supply current is 120 mA typical. This replaces prior IC's with designations of 3904, 7406, 3302, 681 and 689.
4. Special –S at the end of the model number is used to define a variety of non-standard features such as special shaft lengths, voltage options, or special testing. Please consult the factory to discuss your special requirements.

AGENCY APPROVALS & CERTIFICATES

CE

Sensata Technologies, Inc. ("Sensata") data sheets are solely intended to assist designers ("Buyers") who are developing systems that incorporate Sensata products (also referred to herein as "components"). Buyer understands and agrees that Buyer remains responsible for using its independent analysis, evaluation and judgment in designing Buyer's systems and products. Sensata data sheets have been created using standard laboratory conditions and engineering practices. Sensata has not conducted any testing other than that specifically described in the published documentation for a particular data sheet. Sensata may make corrections, enhancements, improvements and other changes to its data sheets or components without notice.
Buyers are authorized to use Sensata data sheets with the Sensata component(s) identified in each particular data sheet. HOWEVER, NO OTHER LICENSE, EXPRESS OR IMPLIED, BY ESTOPPEL OR OTHERWISE TO ANY OTHER SENSATA INTELLECTUAL PROPERTY RIGHT, AND NO LICENSE TO ANY THIRD PARTY TECHNOLOGY OR INTELLECTUAL PROPERTY RIGHT, IS GRANTED HEREIN. SENSATA DATA SHEETS ARE PROVIDED "AS IS". SENSATA MAKES NO WARRANTIES OR REPRESENTATIONS WITH REGARD TO THE DATA SHEETS OR USE OF THE DATA SHEETS, EXPRESS, IMPLIED OR STATUTORY, INCLUDING ACCURACY OR COMPLETENESS. SENSATA DISCLAIMS ANY WARRANTY OF TITLE AND ANY IMPLIED WARRANTIES OF MERCHANTABILITY, FITNESS FOR A PARTICULAR PURPOSE, QUIET ENJOYMENT, QUIET POSSESSION, AND NON-INFRINGEMENT OF ANY THIRD PARTY INTELLECTUAL PROPERTY RIGHTS WITH REGARD TO SENSATA DATA SHEETS OR USE THEREOF.
All products are sold subject to Sensata's terms and conditions of sale supplied at www.sensata.com SENSATA ASSUMES NO LIABILITY FOR APPLICATIONS ASSISTANCE OR THE DESIGN OF BUYERS' PRODUCTS. BUYER ACKNOWLEDGES AND AGREES THAT IT IS SOLELY RESPONSIBLE FOR COMPLIANCE WITH ALL LEGAL, REGULATORY AND SAFETY-RELATED REQUIREMENTS CONCERNING ITS PRODUCTS, AND ANY USE OF SENSATA COMPONENTS IN ITS APPLICATIONS, NOTWITHSTANDING ANY APPLICATIONS-RELATED INFORMATION OR SUPPORT THAT MAY BE PROVIDED BY SENSATA.
Mailing Address: Sensata Technologies, Inc., 529 Pleasant Street, Attleboro, MA 02703, USA.

CONTACT US

Americas
+1 (800) 350 2727
sales.beisensors@sensata.com
Europe, Middle East & Africa
+33 (3) 88 20 8080
position-info.eu@sensata.com
Asia Pacific
sales.isasia@list.sensata.com
China +86 (21) 2306 1500
Japan +81 (45) 277 7117
Korea +82 (31) 601 2004
India +91 (80) 67920890
Rest of Asia +886 (2) 27602006 ext 2808

Copyright © 2018 Sensata Technologies, Inc.

02083-001 Rev:05/11/2018

Общество с ограниченной ответственностью «МосЧип» ИНН 7719860671 / КПП 771901001
Адрес: 105318, г.Москва, ул.Щербаковская д.3, офис 1107

Данный компонент на территории Российской Федерации

Вы можете приобрести в компании MosChip.

Для оперативного оформления запроса Вам необходимо перейти по данной ссылке:

http://moschip.ru/get-element

Вы можете разместить у нас заказ для любого Вашего проекта, будь то серийное производство или разработка единичного прибора.

В нашем ассортименте представлены ведущие мировые производители активных и пассивных электронных компонентов.

Нашей специализацией является поставка электронной компонентной базы двойного назначения, продукции таких производителей как XILINX, Intel (ex.ALTERA), Vicor, Microchip, Texas Instruments, Analog Devices, Mini-Circuits, Amphenol, Glenair.

Сотрудничество с глобальными дистрибьюторами электронных компонентов, предоставляет возможность заказывать и получать с международных складов практически любой перечень компонентов в оптимальные для Вас сроки.

На всех этапах разработки и производства наши партнеры могут получить квалифицированную поддержку опытных инженеров.

Система менеджмента качества компании отвечает требованиям в соответствии с ГОСТ Р ИСО 9001, ГОСТ РВ 0015-002 и ЭС РД 009

Офис по работе с юридическими лицами:

105318, г.Москва, ул.Щербаковская д.3, офис 1107, 1118, ДЦ «Щербаковский»

Телефон: +7 495 668-12-70 (многоканальный)

Факс: +7 495 668-12-70 (доб.304)

E-mail: info@moschip.ru

Skype отдела продаж:
moschip.ru
moschip.ru_4
moschip.ru_6
moschip.ru_9