THIS ENTIRE DRAWING IS SUBJECT TO THE FOLLOWING LEGEND: HARTMAN®
THOSE PORTIONS OF THIS TECHNICAL DATA INDICATED AS LIMITED RIGHTS DATA SHALL NOT, WITHOUT THE WRITTEN PERMISSION OF THE ABOVE CONTRACTOR, BE EITHER (a) USED, RELEASED OR DISCLOSED IN WHOLE OR IN PART OUTSIDE THE GOVERNMENT (b) USED IN WHOLE OR IN PART BY THE GOVERNMENT FOR MANUFACTURE OR, IN THE CASE OF COMPUTER SOFTWARE DOCUMENTATION, FOR PREPARING THE SAME OR SIMILIAR COMPUTER SOFTWARE, OR (c) USED BY A PARTY OTHER THAN THE GOVERNMENT, EXCEPT FOR: (i) EMERGENCY REPAIR OR OVERHAUL WORK ONLY, BY OR FOR THE GOVERNMENT, WHERE THE ITEM OR PROCESS CONCERNED IS NOT OTHERWISE REASONABLY AVAILABLE TO ENABLE TIMELY PERFORMANCE OF THE WORK, PROVIDED THAT THE RELEASE OR DISCLOSURE HEREOF OUTSIDE THE GOVERNMENT SHALL BE MADE SUBJECT TO A PROHIBITION AGAINST FURTHER USE, RELEASE OR DISCLOSURE; OR (ii) RELEASE TO A FOREIGN GOVERNMENT, AS THE INTEREST OF THE UNITED STATES MAY REQUIRE, ONLY FOR INFORMATION OR EVALUATION WITHIN SUCH GOVERNMENT OR FOR EMERGENCY REPAIR OR OVERHAUL WORK BY OR FOR SUCH GOVERNMENT UNDER THE CONDITIONS OF (i) ABOVE. THIS LEGEND, TOGETHER WITH THE INDICATIONS OF THE PORTIONS OF THIS DATA WHICH ARE SUBJECT TO SUCH LIMITATIONS SHALL BE INCLUDED ON ANY REPRODUCTION HEREOF WHICH INCLUDES ANY PART OF THE PORTIONS SUBJECT TO SUCH LIMITATION.

HARTMAN® PROPRIETARY (DO NOT COPY)

REVISIONS			RELEASED	
SYM		DESCRIPTION	DATE	APPROVED
A	0175-03	REMOVED NOTE 7	03/12/23	CB
B	0569-04	REMOVED ITEM 4	04/07/06	CB

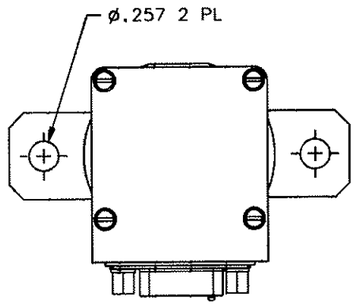

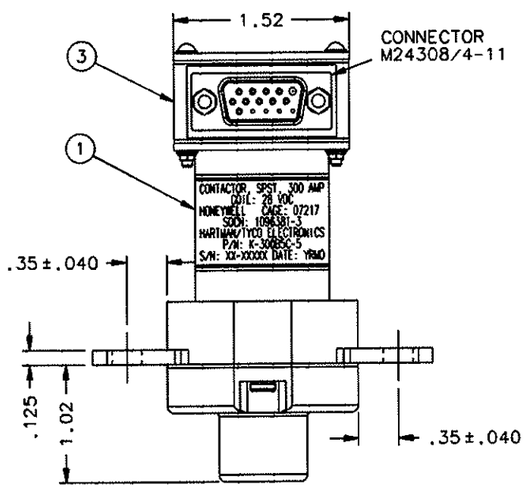

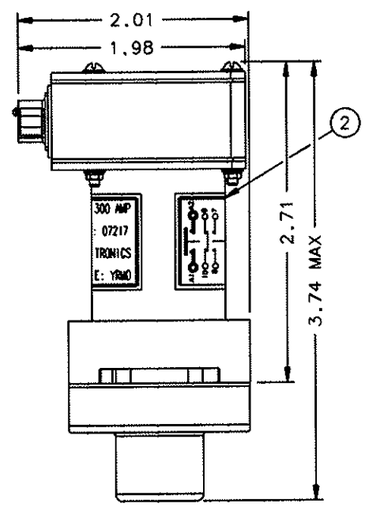

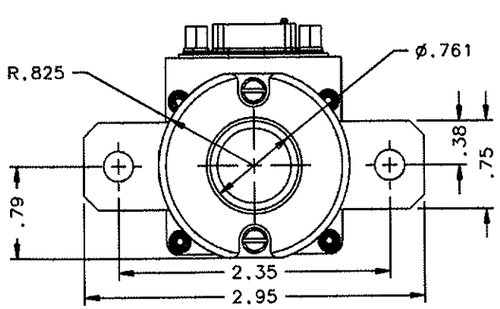

CONSTRUCTION	GASKET SEALED
MAIN CONTACTS	
CONFIGURATION	SPST N.O. (DOUBLE BREAK)
VOLTAGE	28 VDC
CURRENT	
RESISTIVE	300 AMPS
OVERLOAD	450 AMPS FOR 5 MIN. 1000 AMPS FOR 10 SEC.
INRUSH	1500 AMPS
RUPTURE	3000 AMPS
AUXILIARY CONTACTS	
CONFIGURATION	2 N.O., 2 N.C.
VOLTAGE	28 VDC
CURRENT	
RESISTIVE	5 AMPS
INDUCTIVE	2 AMPS
LAMP	1 AMP
LOW LEVEL	1 mA AT 28 VDC
COIL DATA	
DUTY CYCLE	CONTINUOUS (ECONOMIZED)
MAX OPERATE VOLTAGE	32 VDC
NOM OPERATE VOLTAGE	28 VDC
MAX PICKUP VOLTAGE	13 VDC AT 20°C (FIRST APPLICATION) 16 VDC AT 85°C
DROPOUT VOLTAGE	9 VDC MAX
COIL CURRENT	
INRUSH	8 AMP MAX AT 32 VDC AND -40°C
HOLD	650 mA MAX AT 32 VDC AND 25°C
OPERATE TIME	35 mSEC MAX AT 18 TO 32 VDC
RELEASE TIME	20 mSEC MAX AT 28 VDC
BOUNCE TIME	5 mSEC MAX AT 18 TO 32 VDC
ENVIRONMENTAL DATA	
TEMPERATURE	-55°C TO 85°C
ALTITUDE	50,000 FEET
LIFE ELECTRICAL	50,000 CYCLES MIN.
LIFE MECHANICAL	100,000 CYCLES MIN.
WEIGHT MAX EST.	.61 LBS.

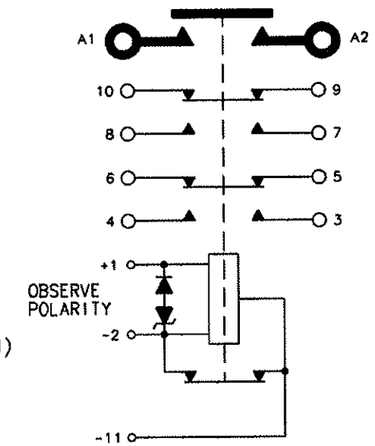

NOTES:
1. COIL TRANSIENT VOLTAGE LIMITED TO ±42 VOLTS REFERENCED TO ZERO VOLTS.
2. AUXILIARY CONTACTS ARE GOLD PLATED.
3. 1 MILLIAMPERE RATING DOES NOT APPLY IF CONTACTS HAVE SWITCHED LOADS ABOVE 1 MILLIAMPERE.
4. CONNECTION -11 IS PROVIDED TO ENSURE OPTIMUM PERFORMANCE DURING STARTING. WHEN USED AS A START CONTACTOR, POSITIVE VOLTAGE IS APPLIED TO CONNECTION +1, AND NEGATIVE TO CONNECTION -11. FOR CONTINUOUS DUTY OPERATION, POSITIVE VOLTAGE IS APPLIED TO CONNECTION +1, AND NEGATIVE TO CONNECTION -2.
5. IF CONNECTION -11 IS USED, THE COILS DUTY CYCLE IS INTERMITTENT.
6. THIS CONTACTOR IS DESIGNED TO HONEYWELL DRAWING NO. 1035288 AND HONEYWELL TECHNICAL SPEC NO. 99E0018

FIND NO	QTY REQD	PART OR IDENTIFYING NO	NOMENCLATURE OR DESCRIPTION	CAGE NO	DRAWING OR SPECIFICATION	MATERIAL OR NOTE
4						
3	1	44898-050	CONTACTOR ASSEMBLY-PRIMARY			
2	1	44900-003	PLATE-SCHEMATIC DIAGRAM			
1	1	44899-006	PLATE-NAME			

UNLESS OTHERWISE SPECIFIED DIMENSIONS ARE IN INCHES TOLERANCES ON

2 PL DEC.	3 PL DEC.	ANGLES
±.06	±.010	±1°

MATERIAL

DR BY	RCB	03/12/23
CHK BY	CB	03/12/23
ENGR	RSS	04/01/08
MFG	MB	04/01/14

SIZE C | CODE IDENT 74063 | SCALE NONE | SHEET

tyco Electronics
Hartman Division • 175 N. DIAMOND STREET MANSFIELD, OHIO 44902

CONTACTOR - SPST N.O. DB
300 AMP, 28 VDC
093

DWG NO. K-300B5C-5

REF TYCO P/N 0-1616068-9

Общество с ограниченной ответственностью «МосЧип» ИНН 7719860671 / КПП 771901001
Адрес: 105318, г.Москва, ул.Щербаковская д.3, офис 1107

Данный компонент на территории Российской Федерации

Вы можете приобрести в компании MosChip.

Для оперативного оформления запроса Вам необходимо перейти по данной ссылке:

http://moschip.ru/get-element

Вы можете разместить у нас заказ для любого Вашего проекта, будь то серийное производство или разработка единичного прибора.

В нашем ассортименте представлены ведущие мировые производители активных и пассивных электронных компонентов.

Нашей специализацией является поставка электронной компонентной базы двойного назначения, продукции таких производителей как XILINX, Intel (ex.ALTERA), Vicor, Microchip, Texas Instruments, Analog Devices, Mini-Circuits, Amphenol, Glenair.

Сотрудничество с глобальными дистрибьюторами электронных компонентов, предоставляет возможность заказывать и получать с международных складов практически любой перечень компонентов в оптимальные для Вас сроки.

На всех этапах разработки и производства наши партнеры могут получить квалифицированную поддержку опытных инженеров.

Система менеджмента качества компании отвечает требованиям в соответствии с ГОСТ Р ИСО 9001, ГОСТ РВ 0015-002 и ЭС РД 009

Офис по работе с юридическими лицами:

105318, г.Москва, ул.Щербаковская д.3, офис 1107, 1118, ДЦ «Щербаковский»

Телефон: +7 495 668-12-70 (многоканальный)

Факс: +7 495 668-12-70 (доб.304)

E-mail: info@moschip.ru

Skype отдела продаж:
moschip.ru
moschip.ru_4
moschip.ru_6
moschip.ru_9