Advanced Technology Filters

Miniature, Subminiature & Microminiature

APPLICATIONS

AVX's Miniature filter line breaks the "small" size barrier. These ultraminiature products, available as solder-in or screw-in style, have case diameters as low as .073". Threaded filters will allow substitution, flexibility of placement and simple installation, while solder-in parts will provide hermeticity of your microcircuit packages. Now, with capacitance values of up to 50,000 pF, "C", "L" or "T" circuits, superior insertion loss over on-board filtering, variety of ultra small and lightweight sizes, you can meet all "mission critical" objectives. World's smallest and most complete miniature EMI filter line is especially well suited for microwave industry, medical electronics, avionics instrumentation, satellites or other applications where space is at premium.

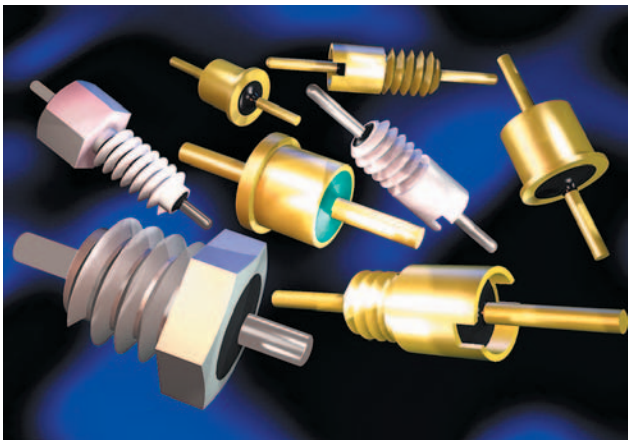

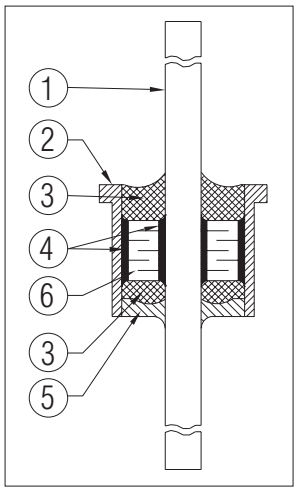

FEATURES

- World's smallest filters, a "must" for avionics and space industry.
- Tiny size for miniaturization of microwave and telecom equipment.
- Hardware real-estate and weight reduction of up to 60%.
- Most complete product offering with solder-in or bolt installation.
- Discoidal capacitor design to meet cost/reliability goals.

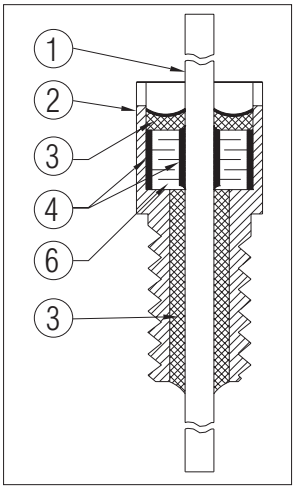

① – LEAD ② – CASE ③ – EPOXY
④ – SOLDER ⑤ – GLASS SEAL ⑥ – CAPACITOR

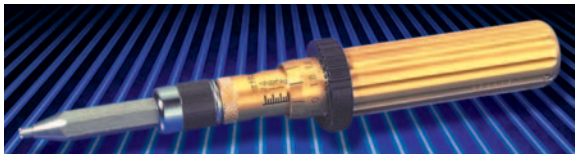

NOTE: Torque limiting tool with custom adapter available upon request.

SPECIFICATIONS

Mechanical

Material: Solder-In: Case and Leads:
Kovar per ASTM F-15

Screw-in: Case: CRS per ASTM-108
Leads: Copper clad steel
(1-64 & 2-56 Thd.)
Copper (4-40 & 8-36 Thd.)

Finish: Solder-in: Gold per Mil-G-45204
Screw-in: Gold per Mil-G-45204 (standard)
Silver optional (1-64 & 2-56 Thd.)
Silver per QQ-S-365 (standard)
Gold optional (4-40 & 8-36 Thd.)

Electrical

Capacitance: measured @ 1KHz and .1 to 1 VRMS, 25°C
Dissipation factor: 3% max.
Insulation resistance: 10,000 Mohms min. @ 25°C, WVDC; 1000 Mohms min. @ 125°C, WVDC
DC resistance: .02 ohm max.
Dielectric withstanding voltage: 200% of WVDC min.

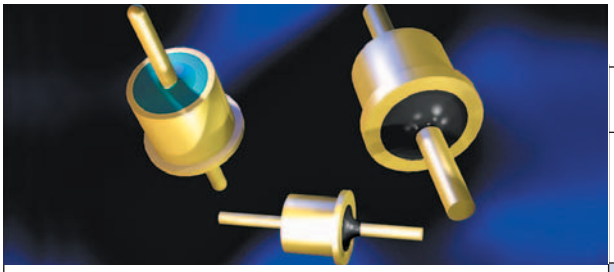

SOLDER-IN STYLE, C TYPE

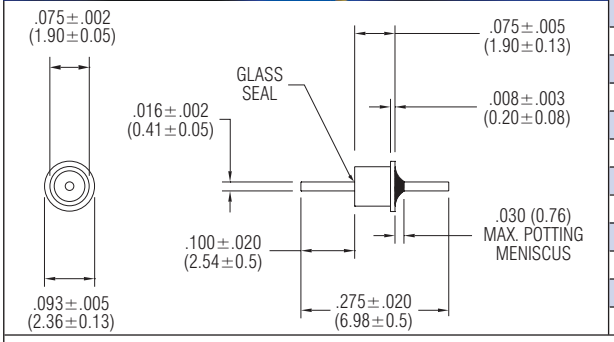

SPECIFICATIONS

AVX Part Number	Voltage Vdc (V)	Min. Cap (pF)	Current Idc (A)	MINIMUM NO LOAD INSERTION LOSS (db) @ 25°C PER MIL-STD-220					
				10 MHZ	30 MHZ	100 MHZ	300 MHZ	1 GHZ	10 GHZ
ZXS1C3-502	50	5000	1.5	15	22	35	45	55	60
ZXS1C3-272	50	2700	1.5	10	17	30	38	50	60
ZXS1A3-152	100	1500	1.5	5	12	25	33	45	55
ZXS1A3-102	100	1000	1.5	4	10	22	30	42	55
ZXS1A3-501	100	500	1.5	–	–	15	25	35	50
ZXS1A3-251	100	250	1.5	–	–	10	17	27	40
ZXS1B3-101	200	100	1.5	–	–	3	10	20	30
ZXS1B3-500	200	50	1.5	–	–	1	6	15	25
ZXS1B3-250	200	25	1.5	–	–	–	1	10	22
ZXS1B3-100	200	10	1.5	–	–	–	–	3	20
ZXS1B3-5R0	200	5	1.5	–	–	–	–	–	15
ZXS1B3-000	200	2 max.	1.5	–	–	–	–	–	–

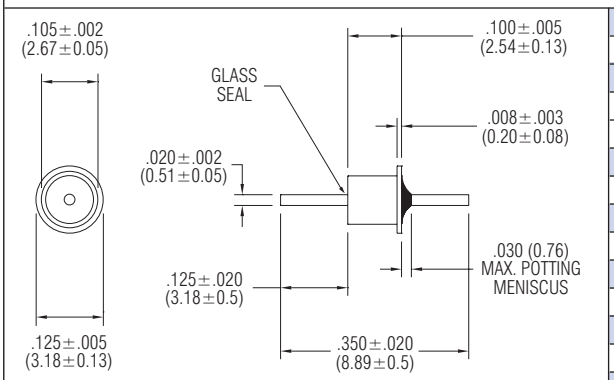

ZYS1C3-273	50	27000	2.5	30	37	43	53	65	70
ZYS1C3-103	50	10000	2.5	20	27	37	47	60	65
ZYS1A3-502	100	5000	2.5	15	22	35	45	55	60
ZYS1A3-272	100	2700	2.5	10	17	30	38	50	60
ZYS1A3-152	100	1500	2.5	5	12	25	33	45	55
ZYS1B3-102	200	1000	2.5	4	10	22	30	42	55
ZYS1B3-501	200	500	2.5	–	–	15	25	35	50
ZYS1B3-251	200	250	2.5	–	–	10	17	27	40
ZYS1B3-101	200	100	2.5	–	–	3	10	20	30
ZYS1B3-500	200	50	2.5	–	–	1	6	15	25
ZYS1B3-250	200	25	2.5	–	–	–	1	10	22
ZYS1B3-100	200	10	2.5	–	–	–	–	3	20
ZYS1B3-5R0	200	5	2.5	–	–	–	–	–	15
ZYS1B3-000	200	2 max.	2.5	–	–	–	–	–	–

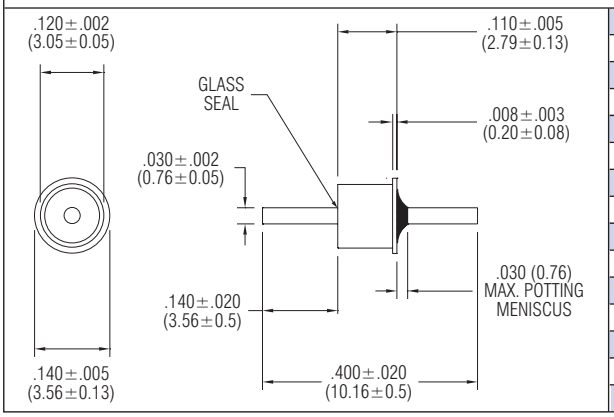

ZZS1C3-503	50	50000	5	35	40	45	55	70	70
ZZS1C3-273	50	27000	5	30	37	43	53	65	70
ZZS1A3-103	100	10000	5	20	27	37	47	60	65
ZZS1B3-502	200	5000	5	15	22	35	45	55	60
ZZS1B3-272	200	2700	5	10	17	30	38	50	60
ZZS1B3-152	200	1500	5	5	12	25	33	45	55
ZZS1B3-102	200	1000	5	4	10	22	30	42	55
ZZS1B3-501	200	500	5	–	–	15	25	35	50
ZZS1B3-251	200	250	5	–	–	10	17	27	40
ZZS1B3-101	200	100	5	–	–	3	10	20	30
ZZS1B3-500	200	50	5	–	–	1	6	15	25
ZZS1B3-250	200	25	5	–	–	–	1	10	22
ZZS1B3-100	200	10	5	–	–	–	–	3	20
ZZS1B3-5R0	200	5	5	–	–	–	–	–	15
ZZS1B3-000	200	2 max.	5	–	–	–	–	–	–

NOTE: Dimensions in inches (millimeters).

CONFIGURATION OPTIONS

Terminals

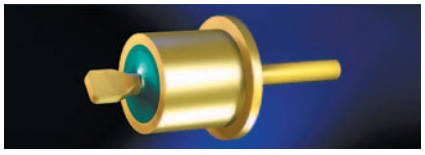

Flattened at Glass Seal End Only

Glass Seal

- Opposite Flange End – Standard
- At Flange End – Reversed

Change 3rd letter of part number from "S" to "R" for reversed configuration

Schematic

- 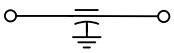 "C" STANDARD
- GLASS SEAL END 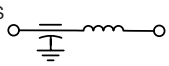 "L_1" AVAILABLE WITH EXTENDED CASE LENGTH

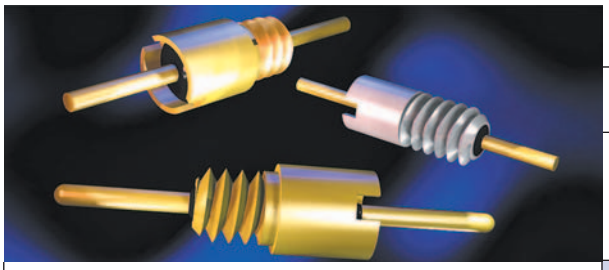

SCREW-IN STYLE, C TYPE 1-64 2-56 THD.

SPECIFICATIONS

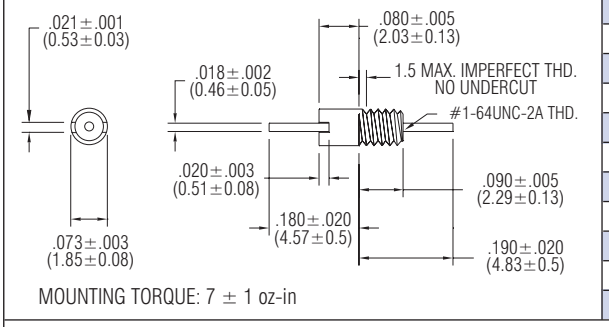

MOUNTING TORQUE: 7 ± 1 oz-in

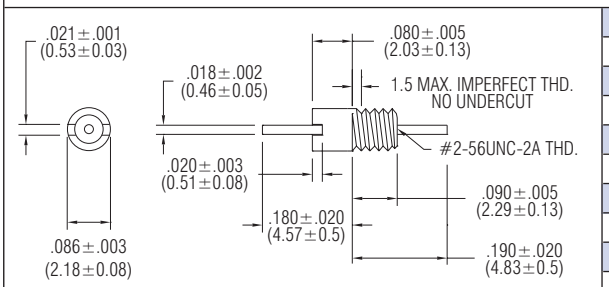

MOUNTING TORQUE: 14 ± 2 oz-in

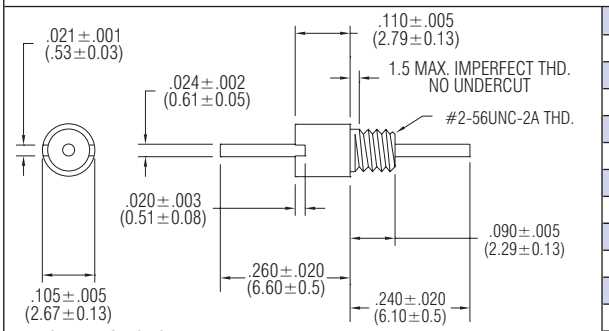

MOUNTING TORQUE: 14 ± 2 oz-in

AVX Part Number	Voltage Vdc (V)	Min. Cap (pF)	Current Idc (A)	MINIMUM NO LOAD INSERTION LOSS (db) @ 25°C PER MIL-STD-220					
				10 MHZ	30 MHZ	100 MHZ	300 MHZ	1 GHZ	10 GHZ
SXD1C3-502	50	5000	3	15	22	35	45	55	60
SXD1C3-272	50	2700	3	10	17	30	38	50	60
SXD1A3-152	100	1500	3	5	12	25	33	45	55
SXD1A3-102	100	1000	3	4	10	22	30	42	55
SXD1A3-501	100	500	3	–	–	15	25	35	50
SXD1A3-251	100	250	3	–	–	10	17	27	40
SXD1B3-101	200	100	3	–	–	3	10	20	30
SXD1B3-500	200	50	3	–	–	1	6	15	25
SXD1B3-250	200	25	3	–	–	–	1	10	22
SXD1B3-100	200	10	3	–	–	–	–	3	20
SXD1B3-5R0	200	5	3	–	–	–	–	–	15
SYD1C3-502	50	5000	3	15	22	35	45	55	60
SYD1C3-272	50	2700	3	10	17	30	38	50	60
SYD1A3-152	100	1500	3	5	12	25	33	45	55
SYD1A3-102	100	1000	3	4	10	22	30	42	55
SYD1A3-501	100	500	3	–	–	15	25	35	50
SYD1A3-251	100	250	3	–	–	10	17	27	40
SYD1B3-101	200	100	3	–	–	3	10	20	30
SYD1B3-500	200	50	3	–	–	1	6	15	25
SYD1B3-250	200	25	3	–	–	–	1	10	22
SYD1B3-100	200	10	3	–	–	–	–	3	20
SYD1B3-5R0	200	5	3	–	–	–	–	–	15
SZD1C3-273	50	27000	5	30	37	43	53	65	70
SZD1C3-103	50	10000	5	20	27	37	47	60	65
SZD1A3-502	100	5000	5	15	22	35	45	55	60
SZD1A3-272	100	2700	5	10	17	30	38	50	60
SZD1A3-152	100	1500	5	5	12	25	33	45	55
SZD1B3-102	200	1000	5	4	10	22	30	42	55
SZD1B3-501	200	500	5	–	–	15	25	35	50
SZD1B3-251	200	250	5	–	–	10	17	27	40
SZD1B3-101	200	100	5	–	–	3	10	20	30
SZD1B3-500	200	50	5	–	–	1	6	15	25
SZD1B3-250	200	25	5	–	–	–	1	10	22
SZD1B3-100	200	10	5	–	–	–	–	3	20
SZD1B3-5R0	200	5	5	–	–	–	–	–	15

NOTE: Dimensions in inches (millimeters). Torque limiting tool with custom adapter required for proper installation (see page 2)

CONFIGURATION OPTIONS

Terminals

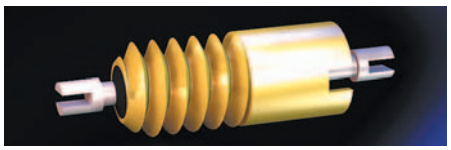

"SZD" and "SYD" Parts Only
Slotted terminal available
on one or both sides

Mounting

- .090 Thd. Length Standard, intended for tapped hole feed through mounting
- .140 Thd. Length available for through hole mounting with hex nut

Schematic

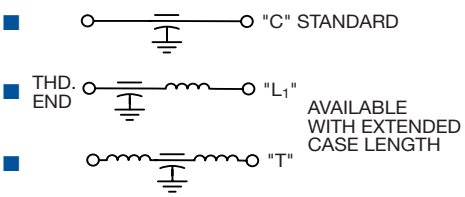

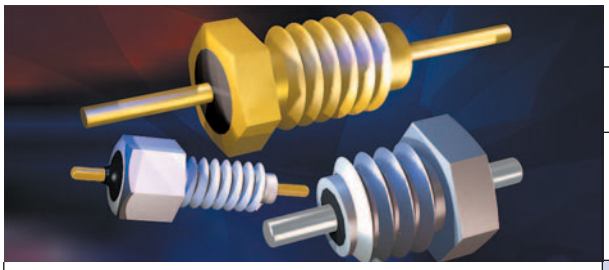

SCREW-IN STYLE, C TYPE 4-40 8-36 THD.

SPECIFICATIONS

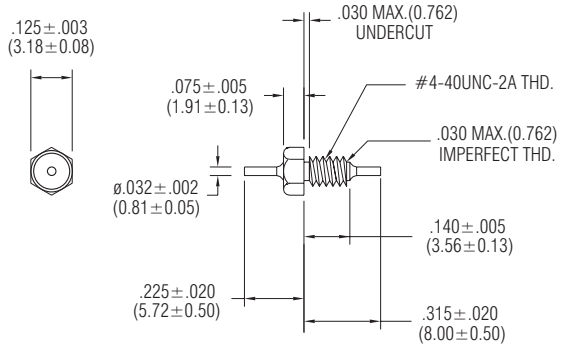

MOUNTING TORQUE: 32 ± 4 oz-in

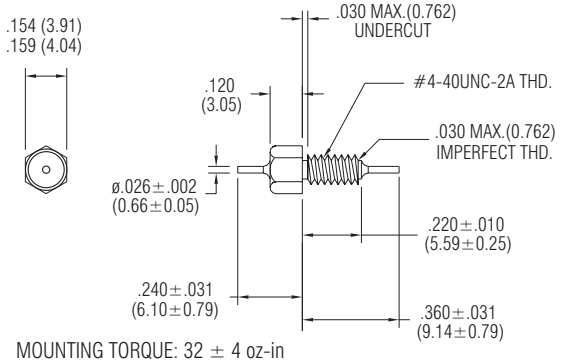

MOUNTING TORQUE: 32 ± 4 oz-in

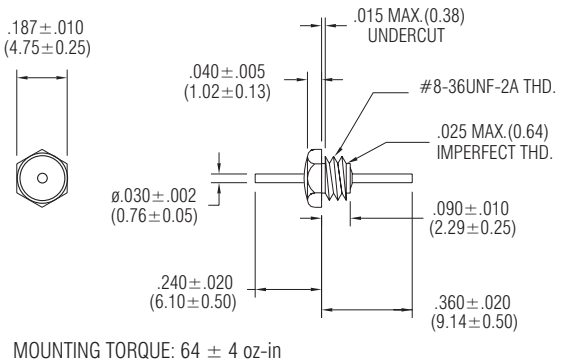

MOUNTING TORQUE: 64 ± 4 oz-in

AVX Part Number	Voltage Vdc (V)	Min. Cap (pF)	Current Idc (A)	MINIMUM NO LOAD INSERTION LOSS (db) @ 25°C PER MIL-STD-220					
				1 MHZ	10 MHZ	100 MHZ	300 MHZ	1 GHZ	10 GHZ
SA1C3-503	50	50000	10	15	35	45	55	70	70
SA1A3-273	100	27000	10	10	30	43	53	65	70
SA1A3-103	100	10000	10	4	20	37	47	60	65
SA1B3-502	200	5000	10	–	15	35	45	55	60
SA1B3-272	200	2700	10	–	10	30	38	50	60
SA1B3-152	200	1500	10	–	5	25	33	45	55
SA1B3-102	200	1000	10	–	4	22	30	42	55
SA1B3-501	200	500	10	–	–	15	25	35	50
SA1B3-251	200	250	10	–	–	10	17	27	40
SA1B3-101	200	100	10	–	–	3	10	20	30
SA1B3-500	200	50	10	–	–	1	6	15	25
SA1B3-250	200	25	10	–	–	–	1	10	22
SA1B3-100	200	10	10	–	–	–	–	3	20
SA1B3-5R0	200	5	10	–	–	–	–	–	15
SA1C1-104	50	100000	10	20	40	50	60	70	70
SA1A1-503	100	50000	10	15	35	45	55	70	70
SA1A1-273	100	27000	10	10	30	43	53	65	70
SA1B1-103	200	10000	10	4	20	37	47	60	65
SA1B1-502	200	5000	10	–	15	35	45	55	60
SA1B1-272	200	2700	10	–	10	30	38	50	60
SA1B1-102	200	1000	10	–	4	22	30	42	55
SA1B1-501	200	500	10	–	–	15	25	35	50
SA1B1-251	200	250	10	–	–	10	17	27	40
SA1B1-101	200	100	10	–	–	3	10	20	30
SA1B1-500	200	50	10	–	–	1	6	15	25
SA1B1-250	200	25	10	–	–	–	1	10	22
SA1B1-100	200	10	10	–	–	–	–	3	20
SA1B1-5R0	200	5	10	–	–	–	–	–	15
SZ1C1-503	50	50000	10	15	35	45	55	70	70
SZ1A1-273	100	27000	10	10	30	43	53	65	70
SZ1A1-103	100	10000	10	4	20	37	47	60	65
SZ1B1-502	200	5000	10	–	15	35	45	55	60
SZ1B1-272	200	2700	10	–	10	30	38	50	60
SZ1B1-152	200	1500	10	–	5	25	33	45	55
SZ1B1-102	200	1000	10	–	4	22	30	42	55
SZ1B1-501	200	500	10	–	–	15	25	35	50
SZ1B1-251	200	250	10	–	–	10	17	27	40
SZ1B1-101	200	100	10	–	–	3	10	20	30
SZ1B1-500	200	50	10	–	–	1	6	15	25
SZ1B1-250	200	25	10	–	–	–	1	10	22
SZ1B1-100	200	10	10	–	–	–	–	3	20
SZ1B1-5R0	200	5	10	–	–	–	–	–	15

NOTE: Dimensions in inches (millimeters).

CONFIGURATION OPTIONS

Leads

- Custom lead lengths and materials available
- Chamfered or rounded lead tips for mating with connectors

Schematic

- THD. END — "L_1" AVAILABLE FOR "SZ" P/N
- THD. END — "L_2" AVAILABLE FOR "SA" P/N

Общество с ограниченной ответственностью «МосЧип» ИНН 7719860671 / КПП 771901001
Адрес: 105318, г.Москва, ул.Щербаковская д.3, офис 1107

Данный компонент на территории Российской Федерации

Вы можете приобрести в компании MosChip.

Для оперативного оформления запроса Вам необходимо перейти по данной ссылке:

http://moschip.ru/get-element

Вы можете разместить у нас заказ для любого Вашего проекта, будь то серийное производство или разработка единичного прибора.

В нашем ассортименте представлены ведущие мировые производители активных и пассивных электронных компонентов.

Нашей специализацией является поставка электронной компонентной базы двойного назначения, продукции таких производителей как XILINX, Intel (ex.ALTERA), Vicor, Microchip, Texas Instruments, Analog Devices, Mini-Circuits, Amphenol, Glenair.

Сотрудничество с глобальными дистрибьюторами электронных компонентов, предоставляет возможность заказывать и получать с международных складов практически любой перечень компонентов в оптимальные для Вас сроки.

На всех этапах разработки и производства наши партнеры могут получить квалифицированную поддержку опытных инженеров.

Система менеджмента качества компании отвечает требованиям в соответствии с ГОСТ Р ИСО 9001, ГОСТ РВ 0015-002 и ЭС РД 009

Офис по работе с юридическими лицами:

105318, г.Москва, ул.Щербаковская д.3, офис 1107, 1118, ДЦ «Щербаковский»

Телефон: +7 495 668-12-70 (многоканальный)

Факс: +7 495 668-12-70 (доб.304)

E-mail: info@moschip.ru

Skype отдела продаж:
moschip.ru
moschip.ru_4
moschip.ru_6
moschip.ru_9