eao

Your Expert Partner for **Human Machine Interfaces**

Series 45

Catalogue

www.eao.com

Expert manufacturers.
EAO creates possibilities. Since 1947.

Founding year: 1947
Number of employees: 600
Headquarters: Olten, Switzerland
Manufacturing Companies: Switzerland, Germany, North America, China
Sales Companies: 11
Distribution countries: 50
Core markets: Transportation, Automotive, Heavy Duty & Special Vehicles, Machinery

EAO AG, a Swiss, family-owned company founded in 1947, has developed into one of the world's leading manufacturers of high-quality industrial switches, complete custom HMI panels and interface systems, and specialised automotive switch systems.

Efficient and modern development processes, effective global supply chains and skilled project and consultation management represent additional services that we offer our customers and business partners around the world.

Your solution-focused expert and partner

We do much more than just manufacture individual control elements. As a solution-focused partner, we provide the option of technically and mechanically customizing existing HMI Components in line with our customers' individual requirements. From simple control elements through to sophisticated HMI Systems, from serial production through to installation – we offer the entire range of HMI services and inspire the confidence of our customers.

Customer-oriented.
More than an expert, a partner.

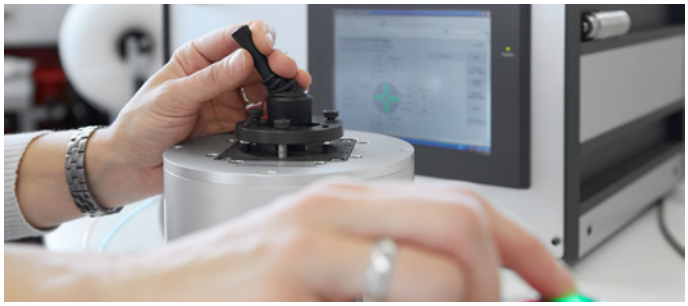

Being close to customers and able to offer a comprehensive range of services are fundamental to our success and at the core of our corporate policy.

EAO's production sites in Switzerland, Germany, North America and China combine volume production, development, research, and logistics. In addition to these centres of competence, EAO has 11 sales companies around the world at its disposal.

Thanks to this comprehensive network and our 50 distribution companies in the major industrialized countries, EAO is represented wherever interactions between humans and machines play key roles.

Control.
For every application.

Operator Device
Actuators and indicators for controlling specific and basic machine functions.

Handheld Control Unit
HMI solutions for mobile control units.

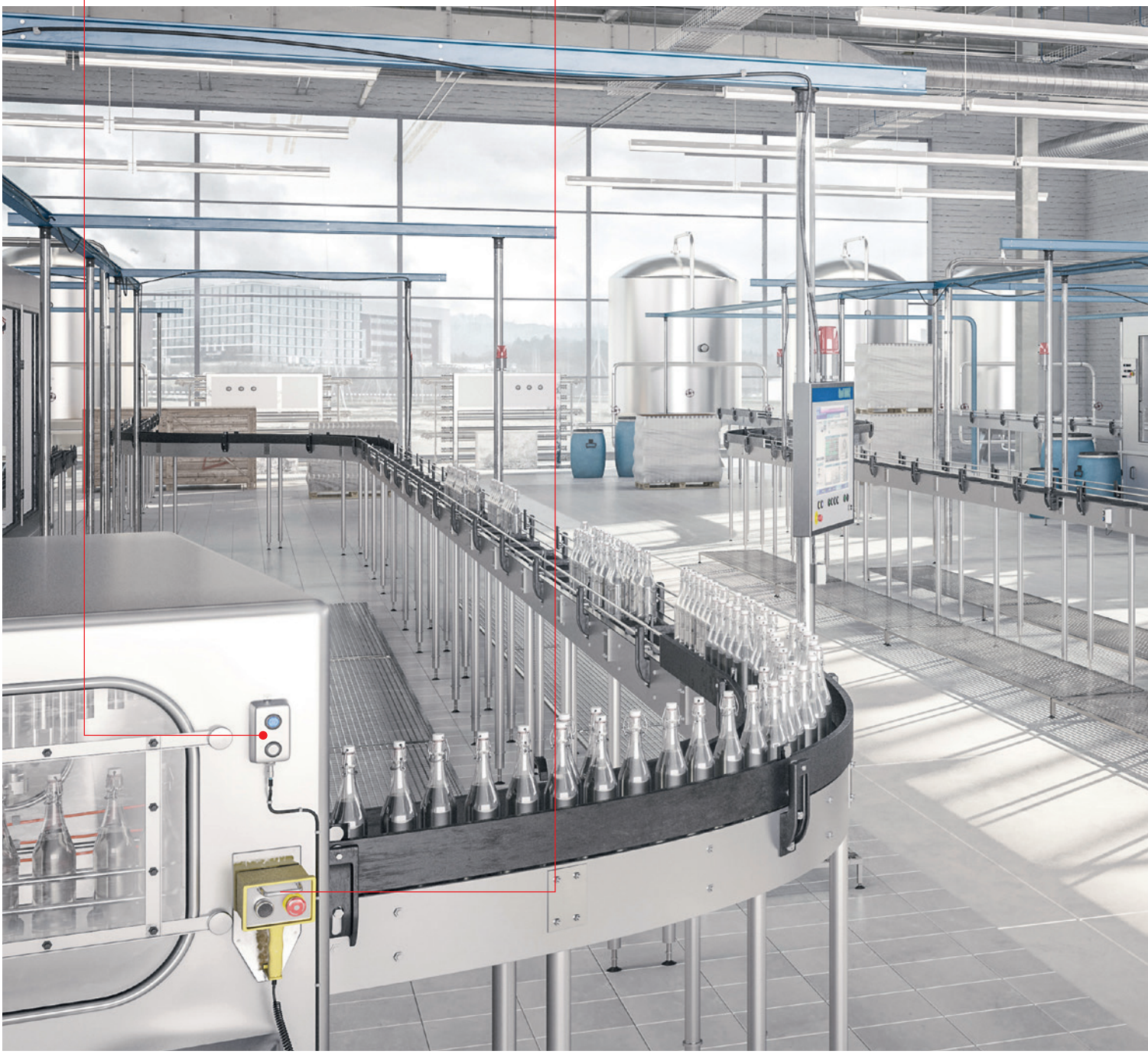

Regardless of the industrial demands placed on our HMI Components and Systems, reliability, longevity, intuitive operation and safety are always at the heart of our products and solutions. Our aim is to provide control over these processes and to afford machine operators the greatest possible level of protection at all times.

Main Operator Panel

HMI Components and Systems for main control units for the overall control of machinery.

Series 45.
Modular, aesthetic and robust in use.

Innovative and comprehensive
Series 45

EAO's Series 45 unites an extremely broad range of machine operating functions with outstanding technical properties. Penetration by dust and liquids is prevented even under the most adverse conditions.

Robust industrial control system
Resistant to aggressive cleaning agents, oils, dyes and other chemical substances, the actuators and indicators of the new Series 45 work perfectly each and every time. Our HMIs literally keep their cool in the face of high humidity and extreme fluctuations in temperature. Functionality is preserved even when the control units are subjected to dust or water at high pressures (IP69K). Series 45 is ideal for use in the most adverse conditions.

High level of modularity
Their modular construction ensures that our HMI Components all operate smoothly with each other. They are straightforward to install and can also be integrated easily into decentralised systems.

Full functionality
Every conceivable HMI function can be performed by products from Series 45. Pushbuttons, illuminated pushbuttons, indicators, selector switches, keylock switches, toggle sticks and emergency stop switches are capable of handling all major functions.

Major benefits
- Comprehensive Series
- Easy to use, modular construction and rapid assembly without special tools
- Rugged in use; IP69K front protection and metal models
- Modern design thanks to flush mounting, attractive illumination and metallic or plastic appearance
- Low energy consumption thanks to LEDs
- Long service life (up to 10 million switching cycles)

Overview

Numbering structure	**8**
Flush design	
Indicator	20
Pushbutton	21
Illuminated pushbutton	23
Keylock switch	25
Selector switch	26
Raised design	
Indicator	34
Pushbutton	38
Double pushbutton	49
Illuminated pushbutton	51
Double pushbutton illuminated	59
Emergency stop switch	61
Stop switch	63
Mushroom-head pushbutton	65
Keylock switch	84
Selector switch	88
Potentiometer	107
Toggle stick	109
Toggle switch	111
Accessories	**112**
Drawings	**144**
Technical data	**151**
Marking	**160**
Application guidelines	**167**
Index	**168**

45 Numbering structure

Indicator

45 -	2	T	XX	.	X	X	X	0	.	0	0	0
Actuator												
T = Indicator												
Function												
00 = Full face illumination												
07 = Front illumination												
Material												
1 = Plastic												
2 = Metal												
3 = Metal/plastic												
4 = Metal/matt												
Shape of handle or front ring												
F = flush												
0 = raised												
Colour												
E = red transparent												
F = amber transparent												
G = yellow transparent												
H = green transparent												
J = blue transparent												
K = colourless transparent												
N = white transparent												

Pushbutton

45 - 2 1 XX . X X X 0 . 0 0 0

Actuator

1 = Pushbutton

Function

31 = 2 positions, momentary

34 = 2 positions, maintain, push to release

Material

1 = Plastic

2 = Metal

3 = Metal/plastic

4 = Metal/matt

Shape of handle or front ring

1 = raised/lens level with front ring

2 = raised/lens raised above front ring

3 = raised/lens lower than front ring

4 = raised/lens lower than front ring, with castallations

F = flush

Colour

1 = black

2 = red

4 = yellow

5 = green

6 = blue

8 = grey

9 = white

K = clear transparent

45 Numbering structure

Double pushbutton, Double pushbutton illuminated

	45 -	2	X	XX	.	X	X	X	0	.	0	0	0
Actuator													
J = Double pushbutton													
K = Double pushbutton illuminated													
Function													
31 = 2 positions, momentary													
Material													
1 = Plastic													
2 = Metal													
3 = Metal/plastic													
Shape of handle													
5 = 2 lenses level with front ring													
6 = lens level with front ring/ lens level raised above front ring													
Colour													
T = green/red													
V = white/black													

Illuminated pushbutton

45 - 2 2 XX . X X X 0 . 0 0 0

Actuator

2 = Illuminated pushbutton

Function

31 = 2 positions, momentary

34 = 2 positions, maintain, push to release

Material

1 = Plastic

2 = Metal

3 = Metal/plastic

4 = Metal/matt

Shape of handle or front ring

1 = raised/lens level with front ring

2 = raised/lens raised above front ring

4 = raised/lens lower than front ring, with castallations

F = flush

Colour

E = red transparent

F = amber transparent

G = yellow transparent

H = green transparent

J = blue transparent

K = colourless transparent

N = white transparent

45 Numbering structure

Emergency stop switch

	45 -	2	X	XX	.	X	X	X	0	.	0	0	0
Actuator													
C = Emergency stop switch													
D = Emergency stop switch, illuminated													
Function													
35 = Key to release													
36 = Twist to release													
37 = Pull to release													
Material													
1 = Plastic													
Shape of handle or front ring													
8 = Diameter 30 mm													
9 = Diameter 40 mm													
A = Diameter 60 mm													
Colour													
2 = red													

Stop switch

45 -	2	7	XX	.	X	X	X	0	.	0	0	0
Actuator												
7 = Stop switch												
Function												
36 = Twist to release												
Material												
1 = Plastic												
Shape of handle or front ring												
9 = Diameter 40 mm												
Colour												
1 = black												

45 Numbering structure

Mushroom-head pushbutton

	45 -	2	X	XX	.	X	X	X	0	.	0	0	0
Actuator													
5 = Mushroom-head pushbutton													
6 = Mushroom-head pushbutton, illuminated													
Function													
30 = 2 positions, maintain, pull release													
31 = 2 positions, momentary													
32 = 3 positions, maintain/momentary, pull release													
Material													
1 = Plastic													
2 = Metal													
3 = Metal/plastic													
Shape of handle or front ring													
8 = Diameter 30 mm													
9 = Diameter 40 mm													
A = Diameter 60 mm													
Colour													
1 = black													
2 = red													
4 = yellow													
5 = green													

Keylock switch

45 -	2	9	XX	.	X	X	0	0	.	X	X	X
Actuator												
9 = Keylock switch												
Function												
0C = 3 positions, maintain, key remove L/R												
0D = 3 positions, maintain, key remove L												
0F = 3 positions, maintain, key remove L/C/R												
0G = 3 positions, maintain, key remove L/C												
0H = 2 positions, maintain, key remove L/R												
0J = 2 positions, maintain, key remove L												
0K = 2 positions, maintain, key remove L												
0Z = 3 positions, maintain, key remove C												
11 = 3 positions, momentary/maintain, key remove C												
17 = 3 positions, maintain, key remove R												
22 = 3 positions, maintain/momentary, key remove C												
24 = 3 positions, maintain, key remove C												
25 = 2 positions, maintain, key remove R												
Material												
1 = Plastic												
2 = Metal												
3 = Metal/plastic												
4 = Metal/matt												
Shape of handle or front ring												
F = flush												
0 = raised												
Lock System												
1 = RONIS												
Key												
1 = T254												
Angle												
1 = 90° (V-Pos)												
3 = 2x45° (V-Pos)												
6 = 45° (0-Pos.12 o'clock)												

45 Numbering structure

Selector switch

	45 -	2	8	XX	.	X	X	X	0	.	0	0	X
Actuator													
8 = Selector switch													
Function													
0S = 3 positions, momentary													
0X = 3 positions, momentary L, maintain R													
16 = 3 positions, momentary R, maintain L													
19 = 3 positions, maintain													
28 = 2 positions, maintain													
44 = 2 positions, momentary													
45 = 4 positions, Maintain, (0-Position 15 h/18 h/21 h/12 h													
Material													
1 = Plastic													
2 = Metal													
3 = Metal/plastic													
4 = Metal/matt													
Shape of handle or front ring													
C = short lever													
D = long lever													
E = round lever													
Colour													
2 = red													
4 = yellow													
5 = green													
6 = blue													
9 = white													
Angle													
1 = 90° (V-Pos)													
2 = 4x90°													
3 = 2x45° (V-Pos)													
6 = 45° (0-Pos.12 o'clock)													

Potentiometer

45 -	2	P	XX	.	X	X	X	0	.	0	0	0
Actuator												
P = Potentiometer												
Function												
01 = 100 kOhm												
02 = 10 kOhm												
03 = 1 kOhm												
04 = 4.7 kOhm												
05 = 470 kOhm												
06 = 47 kOhm												
Material												
1 = Plastic												
2 = Metal												
Shape of handle or front ring												
E = round lever												
Colour												
1 = black												

45 Numbering structure

Toggle stick

45 -	2	F	XX	.	X	X	X	0	.	0	0	0
Actuator												
F = Toggle stick												
Function												
0T = 2 positions, momentary, L/R												
0V = 4 positions, momentary, L/R/U/D												
13 = 2 positions, momentary, L/R, lockable C												
14 = 4 positions, momentary, L/R/U/D, lockable C												
20 = 2 positions, maintain, L/R												
21 = 4 positions, maintain, L/R/U/D												
26 = 2 positions, maintain, L/R, lockable C												
27 = 4 positions, maintain, L/R/U/D, lockable C												
38 = 2 positions, momentary U/D												
40 = 2 positions, momentary, U/D, lockable C												
41 = 2 positions, maintain, U/D												
43 = 2 positions, maintain, U/D, lockable												
Material												
1 = Plastic												
2 = Metal												
3 = Metal/plastic												
Colour												
1 = black												

Toggle switch

45 -	2	N	XX	.	X	0	1	0	.	0	0	0
Actuator												
N = Toggle switch												
Funktion												
39 = 2 positions, momentary												
42 = 2 positions, maintain												
Material												
1 = Plastic												
2 = Metal												
3 = Metal/plastic												

45 Flush design

Indicator, IP66, IP67, IP69K

Product can differ from the current configuration.

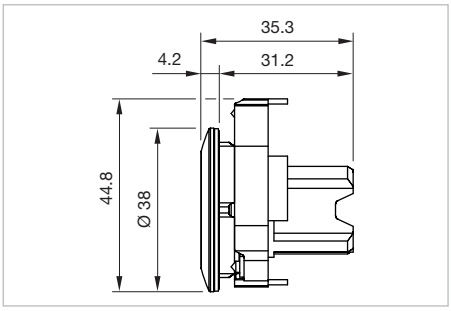

Dimensions [mm]

Additional Information

- Mounting depth incl. front plate, see chapter «drawings»
- Front panel thickness 1 … 6 mm

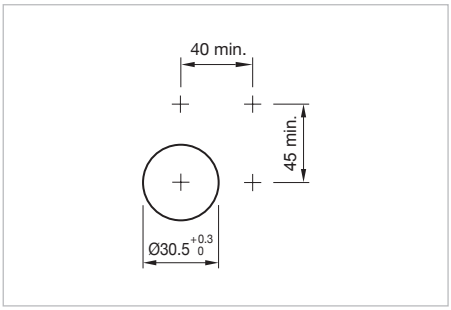

Mounting cut-outs [mm]

Equipment consisting of (schematic overview)

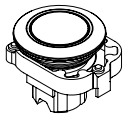

Actuator

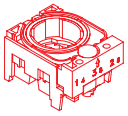

Holder *page 130*

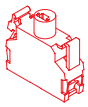

Illumination element *page 134*

Each Part Number listed below includes all the black components shown in the 3D-drawing.

To obtain a complete unit, please select the red components from the pages shown.

LED colour	Front ring	Lens cap	Part No.	Weight
Indicator actuator, Front dimension Ø 38 mm				
red	Metal sandgrey	Plastic red transparent	**45-2T07.4FE0.000**	0.048 kg
Indicator actuator, Front dimension Ø 38 mm				
yellow	Metal sandgrey	Plastic yellow transparent	**45-2T07.4FG0.000**	0.048 kg
Indicator actuator, Front dimension Ø 38 mm				
green	Metal sandgrey	Plastic green transparent	**45-2T07.4FH0.000**	0.048 kg
Indicator actuator, Front dimension Ø 38 mm				
blue	Metal sandgrey	Plastic blue transparent	**45-2T07.4FJ0.000**	0.048 kg
Indicator actuator, Front dimension Ø 38 mm				
white	Metal sandgrey	Plastic colourless transparent	**45-2T07.4FK0.000**	0.048 kg

Pushbutton, IP66, IP67, IP69K

Equipment consisting of (schematic overview)

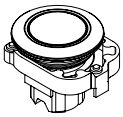

Actuator

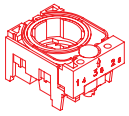

Holder *page 130*

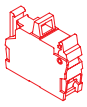

Switching element *page 132*

Each Part Number listed below includes all the black components shown in the 3D-drawing.

To obtain a complete unit, please select the red components from the pages shown.

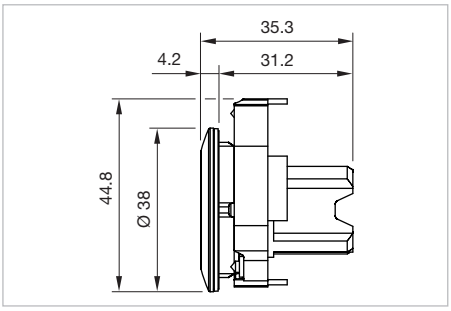

Dimensions [mm]

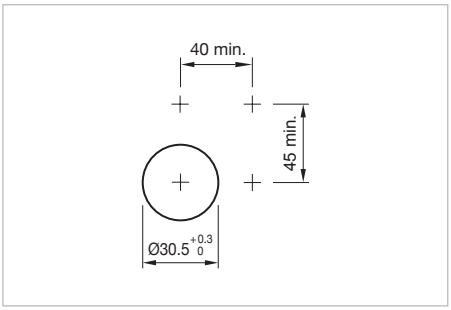

Mounting cut-outs [mm]

Product can differ from the current configuration.

Additional Information

- Mounting depth incl. front plate, see chapter «drawings»
- Front panel thickness 1 … 6 mm

Front ring	Lens	Switching action	Part No.	Wiring diagram	Weight
Pushbutton actuator, Momentary, Front dimension Ø 38 mm					
Metal sandgrey	Plastic black	B	**45-2131.4F10.000**	1	0.048 kg
Pushbutton actuator, Momentary, Front dimension Ø 38 mm					
Metal sandgrey	Plastic red	B	**45-2131.4F20.000**	1	0.048 kg
Pushbutton actuator, Momentary, Front dimension Ø 38 mm					
Metal sandgrey	Plastic yellow	B	**45-2131.4F40.000**	1	0.048 kg
Pushbutton actuator, Momentary, Front dimension Ø 38 mm					
Metal sandgrey	Plastic green	B	**45-2131.4F50.000**	1	0.048 kg
Pushbutton actuator, Momentary, Front dimension Ø 38 mm					
Metal sandgrey	Plastic blue	B	**45-2131.4F60.000**	1	0.048 kg

45 Flush design

Front ring	Lens	Switching action	Part No.	Wiring diagram	Weight
Pushbutton actuator, Momentary, Front dimension Ø 38 mm					
Metal sandgrey	Plastic white	B	**45-2131.4F90.000**	1	0.048 kg
Pushbutton actuator, Maintain, Front dimension Ø 38 mm					
Metal sandgrey	Plastic black	C	**45-2134.4F10.000**	2	0.048 kg
Pushbutton actuator, Maintain, Front dimension Ø 38 mm					
Metal sandgrey	Plastic red	C	**45-2134.4F20.000**	2	0.048 kg
Pushbutton actuator, Maintain, Front dimension Ø 38 mm					
Metal sandgrey	Plastic yellow	C	**45-2134.4F40.000**	2	0.048 kg
Pushbutton actuator, Maintain, Front dimension Ø 38 mm					
Metal sandgrey	Plastic green	C	**45-2134.4F50.000**	2	0.048 kg
Pushbutton actuator, Maintain, Front dimension Ø 38 mm					
Metal sandgrey	Plastic blue	C	**45-2134.4F60.000**	2	0.048 kg
Pushbutton actuator, Maintain, Front dimension Ø 38 mm					
Metal sandgrey	Plastic white	C	**45-2134.4F90.000**	2	0.048 kg

Switching action: B = Momentary, C = Maintain

Wiring diagram 1	Wiring diagram 2

Illuminated pushbutton, IP66, IP67, IP69K

Equipment consisting of (schematic overview)

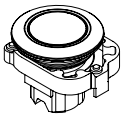

Actuator

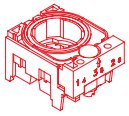

Holder *page 130*

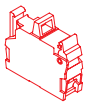

Switching element *page 132*

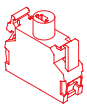

Illumination element *page 134*

Each Part Number listed below includes all the black components shown in the 3D-drawing.

To obtain a complete unit, please select the red components from the pages shown.

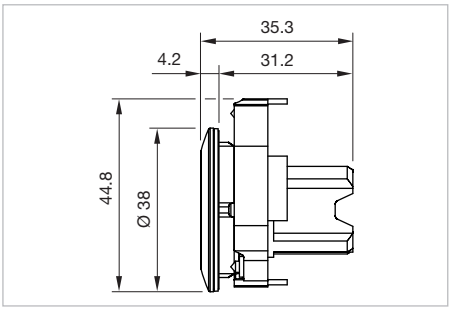

Dimensions [mm]

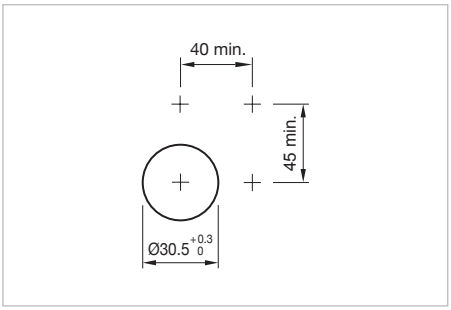

Mounting cut-outs [mm]

Product can differ from the current configuration.

Additional Information

- Mounting depth incl. front plate, see chapter «drawings»
- Front panel thickness 1 … 6 mm

LED colour	Front ring	Lens	Switching action	Part No.	Wiring diagram	Weight
Illuminated pushbutton actuator, Momentary, Front dimension Ø 38 mm						
red	Metal sandgrey	Plastic red transparent	B	**45-2231.4FE0.000**	1	0.048 kg
Illuminated pushbutton actuator, Momentary, Front dimension Ø 38 mm						
yellow	Metal sandgrey	Plastic yellow transparent	B	**45-2231.4FG0.000**	1	0.048 kg
Illuminated pushbutton actuator, Momentary, Front dimension Ø 38 mm						
green	Metal sandgrey	Plastic green transparent	B	**45-2231.4FH0.000**	1	0.048 kg
Illuminated pushbutton actuator, Momentary, Front dimension Ø 38 mm						
blue	Metal sandgrey	Plastic blue transparent	B	**45-2231.4FJ0.000**	1	0.048 kg
Illuminated pushbutton actuator, Momentary, Front dimension Ø 38 mm						
white	Metal sandgrey	Plastic colourless transparent	B	**45-2231.4FK0.000**	1	0.048 kg

45 Flush design

LED colour	Front ring	Lens	Switching action	Part No.	Wiring dia-gram	Weight
Illuminated pushbutton actuator, Maintain, Front dimension Ø 38 mm						
red	Metal sandgrey	Plastic red transparent	C	**45-2234.4FE0.000**	2	0.048 kg
Illuminated pushbutton actuator, Maintain, Front dimension Ø 38 mm						
yellow	Metal sandgrey	Plastic yellow transparent	C	**45-2234.4FG0.000**	2	0.048 kg
Illuminated pushbutton actuator, Maintain, Front dimension Ø 38 mm						
green	Metal sandgrey	Plastic green transparent	C	**45-2234.4FH0.000**	2	0.048 kg
Illuminated pushbutton actuator, Maintain, Front dimension Ø 38 mm						
blue	Metal sandgrey	Plastic blue transparent	C	**45-2234.4FJ0.000**	2	0.048 kg
Illuminated pushbutton actuator, Maintain, Front dimension Ø 38 mm						
white	Metal sandgrey	Plastic colourless transparent	C	**45-2234.4FK0.000**	2	0.048 kg

Switching action: B = Momentary, C = Maintain

Wiring diagram 1	Wiring diagram 2

Keylock switch 2 and 3 positions, IP66, IP67, IP69K

Equipment consisting of (schematic overview)

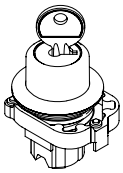

Actuator

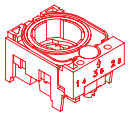

Holder *page 130*

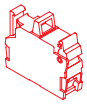

Switching element *page 132*

Each Part Number listed below includes all the black components shown in the 3D-drawing.

To obtain a complete unit, please select the red components from the pages shown.

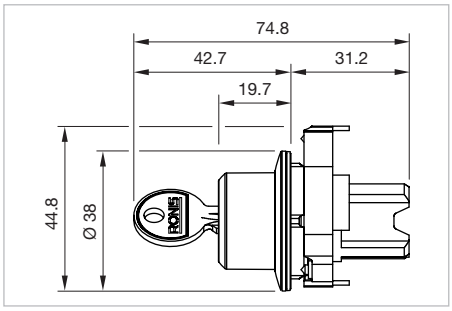

Dimensions [mm]

Product can differ from the current configuration.

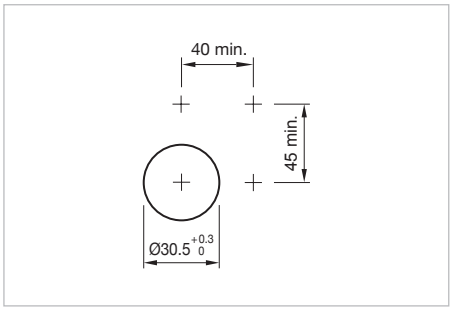

Mounting cut-outs [mm]

Additional Information

- Mounting depth incl. front plate, see chapter «drawings»
- Front panel thickness 1 … 6 mm
- The standard lock: RONIS, T254
- Two keys are supplied with each key lock switch

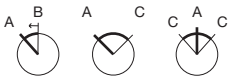

Switching positions (A = Rest, B = Momentary, C = Maintained)

Front ring	Switching action	Switching angle	Key remove	Part No.	Wiring diagram	Weight
Keylock switch 2 positions, Front dimension Ø 38 mm						
Metal sandgrey	A - B	B = 45°	A	**45-290J.4F00.116**	1	0.090 kg
	A - C	C = 90°	A + C	**45-290H.4F00.111**	2	0.090 kg
			A	**45-290J.4F00.111**	2	0.090 kg
Keylock switch 3 positions, Front dimension Ø 38 mm						
Metal sandgrey	C - A - C	C = 45°	C - A - C	**45-290F.4F00.113**	3	0.090 kg

Switching action: A = Rest, B = Momentary, C = Maintain

Wiring diagram 1	Wiring diagram 2	Wiring diagram 3

Selector switch actuator 2 positions short lever, IP66, IP67, IP69K

Product can differ from the current configuration.

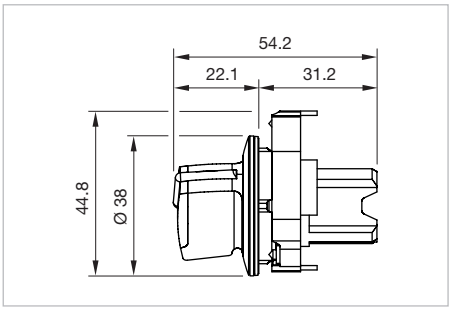

Dimensions [mm]

Additional Information

- It is advisable to choose a white illumination
- Mounting depth incl. front plate, see chapter «drawings»
- Front panel thickness 1 … 6 mm
- Illumination elements are optional

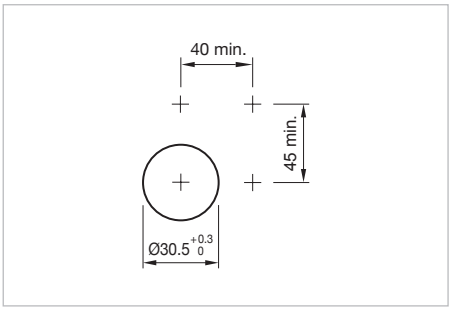

Mounting cut-outs [mm]

Equipment consisting of (schematic overview)

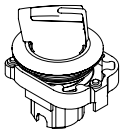

Actuator

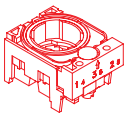

Holder *page 130*

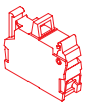

Switching element *page 132*

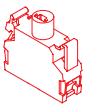

Illumination element *page 134*

Each Part Number listed below includes all the black components shown in the 3D-drawing.

To obtain a complete unit, please select the red components from the pages shown.

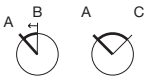

Switching positions (A = Rest, B = Momentary, C = Maintained)

Lever	Front ring	Switching action	Switching angle	Part No.	Wiring diagram	Weight
Selector switch actuator 2 positions, short lever, Front dimension Ø 38 mm						
Plastic red	Metal sandgrey	A - B	B = 45°	**45-2844.4C20.006**	1	0.055 kg
Selector switch actuator 2 positions, short lever, Front dimension Ø 38 mm						
Plastic green	Metal sandgrey	A - B	B = 45°	**45-2844.4C50.006**	1	0.055 kg
Selector switch actuator 2 positions, short lever, Front dimension Ø 38 mm						
Plastic white	Metal sandgrey	A - B	B = 45°	**45-2844.4C90.006**	1	0.055 kg
Selector switch actuator 2 positions, short lever, Front dimension Ø 38 mm						
Plastic red	Metal sandgrey	A - C	C = 90°	**45-2828.4C20.001**	2	0.055 kg

Lever	Front ring	Switching action	Switching angle	Part No.	Wiring dia-gram	Weight
Selector switch actuator 2 positions, short lever, Front dimension Ø 38 mm						
Plastic green	Metal sandgrey	A - C	C = 90°	**45-2828.4C50.001**	2	0.055 kg
Selector switch actuator 2 positions, short lever, Front dimension Ø 38 mm						
Plastic white	Metal sandgrey	A - C	C = 90°	**45-2828.4C90.001**	2	0.055 kg

Switching action: A = Rest, B = Momentary, C = Maintain

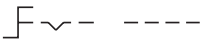 Wiring diagram 1	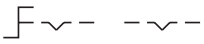 Wiring diagram 2

Selector switch 2 positions long lever, IP66, IP67, IP69K

Product can differ from the current configuration.

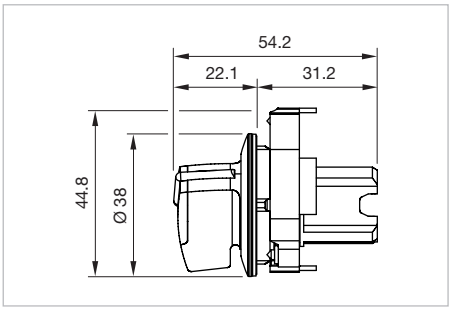

Dimensions [mm]

Additional Information

- It is advisable to choose a white illumination
- Mounting depth incl. front plate, see chapter «drawings»
- Front panel thickness 1 … 6 mm
- Illumination elements are optional

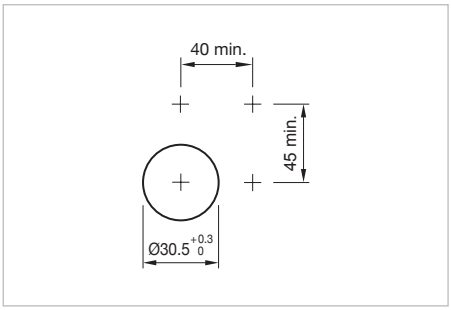

Mounting cut-outs [mm]

Equipment consisting of (schematic overview)

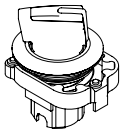

Actuator

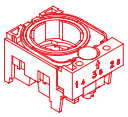

Holder *page 130*

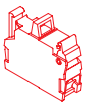

Switching element *page 132*

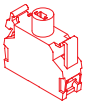

Illumination element *page 134*

Each Part Number listed below includes all the black components shown in the 3D-drawing.

To obtain a complete unit, please select the red components from the pages shown.

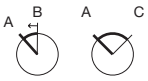

Switching positions (A = Rest, B = Momentary, C = Maintained)

Lever	Front ring	Switching action	Switching angle	Part No.	Wiring diagram	Weight
Selector switch actuator 2 positions, long lever, Front dimension Ø 38 mm						
Plastic red	Metal sandgrey	A - B	B = 45°	**45-2844.4D20.006**	1	0.055 kg
Selector switch actuator 2 positions, long lever, Front dimension Ø 38 mm						
Plastic green	Metal sandgrey	A - B	B = 45°	**45-2844.4D50.006**	1	0.055 kg
Selector switch actuator 2 positions, long lever, Front dimension Ø 38 mm						
Plastic white	Metal sandgrey	A - B	B = 45°	**45-2844.4D90.006**	1	0.055 kg
Selector switch actuator 2 positions, long lever, Front dimension Ø 38 mm						
Plastic red	Metal sandgrey	A - C	C = 90°	**45-2828.4D20.001**	2	0.055 kg

Lever	Front ring	Switching action	Switching angle	Part No.	Wiring dia-gram	Weight
Selector switch actuator 2 positions, long lever, Front dimension Ø 38 mm						
Plastic green	Metal sandgrey	A - C	C = 90°	**45-2828.4D50.001**	2	0.055 kg
Selector switch actuator 2 positions, long lever, Front dimension Ø 38 mm						
Plastic white	Metal sandgrey	A - C	C = 90°	**45-2828.4D90.001**	2	0.055 kg

Switching action: A = Rest, B = Momentary, C = Maintain

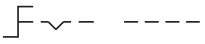 Wiring diagram 1	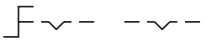 Wiring diagram 2

Selector switch 3 positions short lever, IP66, IP67, IP69K

Product can differ from the current configuration.

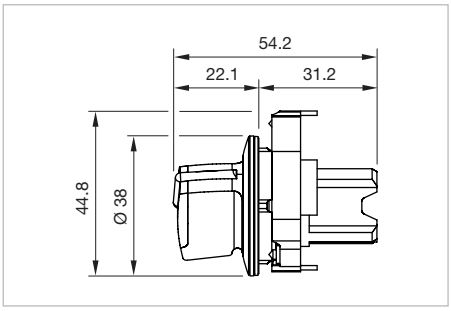

Dimensions [mm]

Additional Information

- It is advisable to choose a white illumination
- Mounting depth incl. front plate, see chapter «drawings»
- Front panel thickness 1 … 6 mm
- Illumination elements are optional

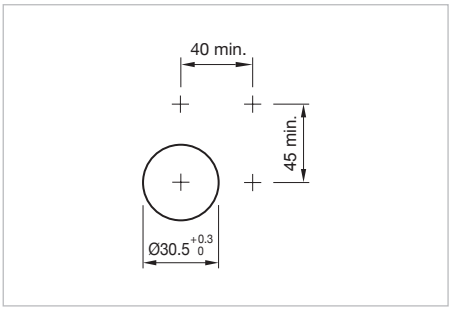

Mounting cut-outs [mm]

Equipment consisting of (schematic overview)

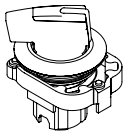

Actuator

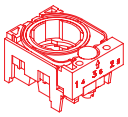

Holder *page 130*

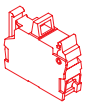

Switching element *page 132*

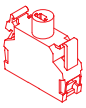

Illumination element *page 134*

Each Part Number listed below includes all the black components shown in the 3D-drawing.

To obtain a complete unit, please select the red components from the pages shown.

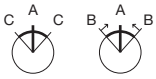

Switching positions (A = Rest, B = Momentary, C = Maintained)

Lever	Front ring	Switching action	Switching angle	Part No.	Wiring diagram	Weight
Selector switch actuator 3 positions, short lever, Front dimension Ø 38 mm						
Plastic red	Metal sandgrey	C - A - C	C = 45°	**45-2819.4C20.003**	1	0.055 kg
Selector switch actuator 3 positions, short lever, Front dimension Ø 38 mm						
Plastic green	Metal sandgrey	C - A - C	C = 45°	**45-2819.4C50.003**	1	0.055 kg
Selector switch actuator 3 positions, short lever, Front dimension Ø 38 mm						
Plastic white	Metal sandgrey	C - A - C	C = 45°	**45-2819.4C90.003**	1	0.055 kg
Selector switch actuator 3 positions, short lever, Front dimension Ø 38 mm						
Plastic red	Metal sandgrey	B - A - B	B = 45°	**45-280S.4C20.003**	2	0.055 kg

Lever	Front ring	Switching action	Switching angle	Part No.	Wiring dia-gram	Weight
Selector switch actuator 3 positions, short lever, Front dimension Ø 38 mm						
Plastic green	Metal sandgrey	B - A - B	B = 45°	**45-280S.4C50.003**	2	0.055 kg
Selector switch actuator 3 positions, short lever, Front dimension Ø 38 mm						
Plastic white	Metal sandgrey	B - A - B	B = 45°	**45-280S.4C90.003**	2	0.055 kg

Switching action: A = Rest, B = Momentary, C = Maintain

Wiring diagram 1	Wiring diagram 2

Selector switch 3 positions long lever, IP66, IP67, IP69K

Product can differ from the current configuration.

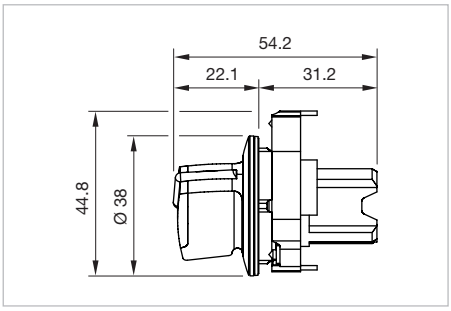

Dimensions [mm]

Additional Information

- It is advisable to choose a white illumination
- Mounting depth incl. front plate, see chapter «drawings»
- Front panel thickness 1 … 6 mm
- Illumination elements are optional

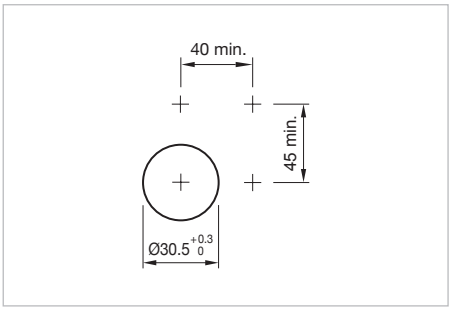

Mounting cut-outs [mm]

Equipment consisting of (schematic overview)

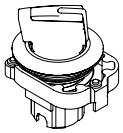

Actuator

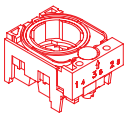

Holder *page 130*

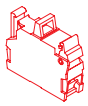

Switching element *page 132*

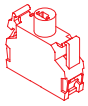

Illumination element *page 134*

Each Part Number listed below includes all the black components shown in the 3D-drawing.

To obtain a complete unit, please select the red components from the pages shown.

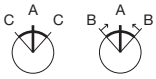

Switching positions (A = Rest, B = Momentary, C = Maintained)

Lever	Front ring	Switching action	Switching angle	Part No.	Wiring diagram	Weight
Selector switch actuator 3 positions, long lever, Front dimension Ø 38 mm						
Plastic red	Metal sandgrey	C - A - C	C = 45°	**45-2819.4D20.003**	1	0.055 kg
Selector switch actuator 3 positions, long lever, Front dimension Ø 38 mm						
Plastic green	Metal sandgrey	C - A - C	C = 45°	**45-2819.4D50.003**	1	0.055 kg
Selector switch actuator 3 positions, long lever, Front dimension Ø 38 mm						
Plastic white	Metal sandgrey	C - A - C	C = 45°	**45-2819.4D90.003**	1	0.055 kg
Selector switch actuator 3 positions, long lever, Front dimension Ø 38 mm						
Plastic red	Metal sandgrey	B - A - B	B = 45°	**45-280S.4D20.003**	2	0.055 kg

Lever	Front ring	Switching action	Switching angle	Part No.	Wiring dia-gram	Weight
Selector switch actuator 3 positions, long lever, Front dimension Ø 38 mm						
Plastic green	Metal sandgrey	B - A - B	B = 45°	**45-280S.4D50.003**	2	0.055 kg
Selector switch actuator 3 positions, long lever, Front dimension Ø 38 mm						
Plastic white	Metal sandgrey	B - A - B	B = 45°	**45-280S.4D90.003**	2	0.055 kg

Switching action: A = Rest, B = Momentary, C = Maintain

Wiring diagram 1	Wiring diagram 2

Indicator full face illumination, IP66, IP67, IP69K

Product can differ from the current configuration.

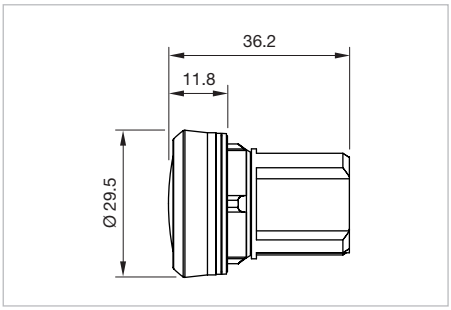

Dimensions [mm]

Additional Information

- Mounting depth incl. front plate, see chapter «drawings»

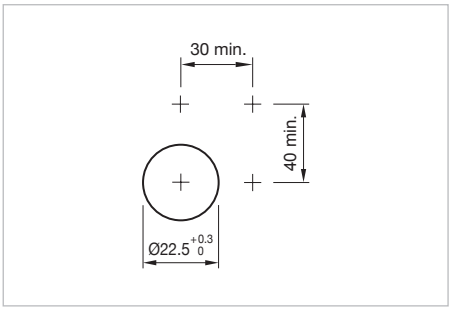

Mounting cut-outs [mm]

Equipment consisting of (schematic overview)

Actuator

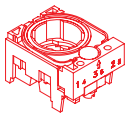

Holder *page 130*

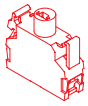

Illumination element *page 134*

Each Part Number listed below includes all the black components shown in the 3D-drawing.

To obtain a complete unit, please select the red components from the pages shown.

LED colour	Housing material	Lens cap	Part No.	Weight
Indicator actuator, Front dimension Ø 29.45 mm				
amber	Plastic	Plastic amber transparency	**45-2T00.10F0.000**	0.001 kg
Indicator actuator, Front dimension Ø 29.45 mm				
red	Plastic	Plastic red transparent	**45-2T00.10E0.000**	0.001 kg
Indicator actuator, Front dimension Ø 29.45 mm				
yellow	Plastic	Plastic yellow transparent	**45-2T00.10G0.000**	0.001 kg
Indicator actuator, Front dimension Ø 29.45 mm				
green	Plastic	Plastic green transparent	**45-2T00.10H0.000**	0.001 kg
Indicator actuator, Front dimension Ø 29.45 mm				
blue	Plastic	Plastic blue transparent	**45-2T00.10J0.000**	0.001 kg

LED colour	Housing material	Lens cap	Part No.	Weight
Indicator actuator, Front dimension Ø 29.45 mm				
white	Plastic	Plastic white transparent	**45-2T00.10N0.000**	0.001 kg
Indicator actuator, Front dimension Ø 29.45 mm				
colourless	Plastic	Plastic colourless transparent	**45-2T00.10K0.000**	0.001 kg
Indicator actuator, Front dimension Ø 29.45 mm				
amber	Metal	Plastic amber transparency	**45-2T00.20F0.000**	0.010 kg
Indicator actuator, Front dimension Ø 29.45 mm				
red	Metal	Plastic red transparent	**45-2T00.20E0.000**	0.010 kg
Indicator actuator, Front dimension Ø 29.45 mm				
yellow	Metal	Plastic yellow transparent	**45-2T00.20G0.000**	0.010 kg
Indicator actuator, Front dimension Ø 29.45 mm				
green	Metal	Plastic green transparent	**45-2T00.20H0.000**	0.010 kg
Indicator actuator, Front dimension Ø 29.45 mm				
blue	Metal	Plastic blue transparent	**45-2T00.20J0.000**	0.010 kg
Indicator actuator, Front dimension Ø 29.45 mm				
white	Metal	Plastic white transparent	**45-2T00.20N0.000**	0.010 kg
Indicator actuator, Front dimension Ø 29.45 mm				
colourless	Metal	Plastic colourless transparent	**45-2T00.20K0.000**	0.010 kg

Indicator front illumination, IP66, IP67, IP69K

Product can differ from the current configuration.

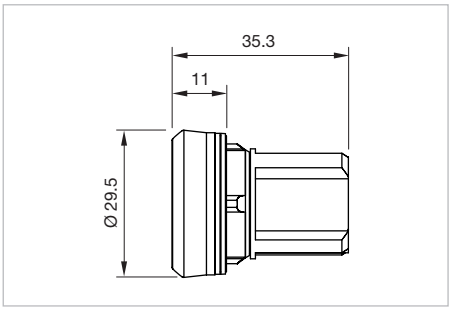

Dimensions [mm]

Additional Information

- Mounting depth incl. front plate, see chapter «drawings»

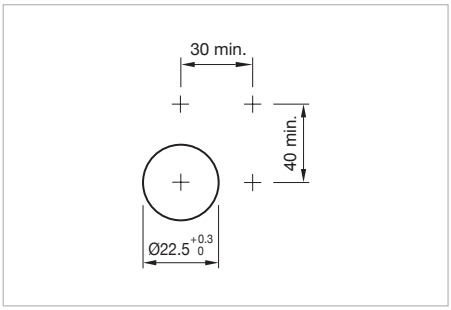

Mounting cut-outs [mm]

Equipment consisting of (schematic overview)

Actuator

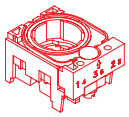

Holder *page 130*

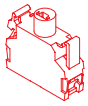

Illumination element *page 134*

Each Part Number listed below includes all the black components shown in the 3D-drawing.

To obtain a complete unit, please select the red components from the pages shown.

LED colour	Front ring	Lens	Housing material	Part No.	Weight
Indicator actuator, Front dimension Ø 29.45 mm					
red	Plastic black	Plastic red transparent	Plastic	**45-2T07.10E0.000**	0.011 kg
Indicator actuator, Front dimension Ø 29.45 mm					
yellow	Plastic black	Plastic yellow transparent	Plastic	**45-2T07.10G0.000**	0.011 kg
Indicator actuator, Front dimension Ø 29.45 mm					
green	Plastic black	Plastic green transparent	Plastic	**45-2T07.10H0.000**	0.011 kg
Indicator actuator, Front dimension Ø 29.45 mm					
blue	Plastic black	Plastic blue transparent	Plastic	**45-2T07.10J0.000**	0.011 kg
Indicator actuator, Front dimension Ø 29.45 mm					
colourless	Plastic black	Plastic colourless transparent	Plastic	**45-2T07.10K0.000**	0.011 kg

LED colour	Front ring	Lens	Housing material	Part No.	Weight
Indicator actuator, Front dimension Ø 29.45 mm					
red	Metal sandgrey	Plastic red transparent	Plastic	**45-2T07.30E0.000**	0.020 kg
Indicator actuator, Front dimension Ø 29.45 mm					
yellow	Metal sandgrey	Plastic yellow transparent	Plastic	**45-2T07.30G0.000**	0.020 kg
Indicator actuator, Front dimension Ø 29.45 mm					
green	Metal sandgrey	Plastic green transparent	Plastic	**45-2T07.30H0.000**	0.020 kg
Indicator actuator, Front dimension Ø 29.45 mm					
blue	Metal sandgrey	Plastic blue transparent	Plastic	**45-2T07.30J0.000**	0.020 kg
Indicator actuator, Front dimension Ø 29.45 mm					
colourless	Metal sandgrey	Plastic colourless transparent	Plastic	**45-2T07.30K0.000**	0.020 kg

45 Raised design

Pushbutton, IP66, IP67, IP69K

Product can differ from the current configuration.

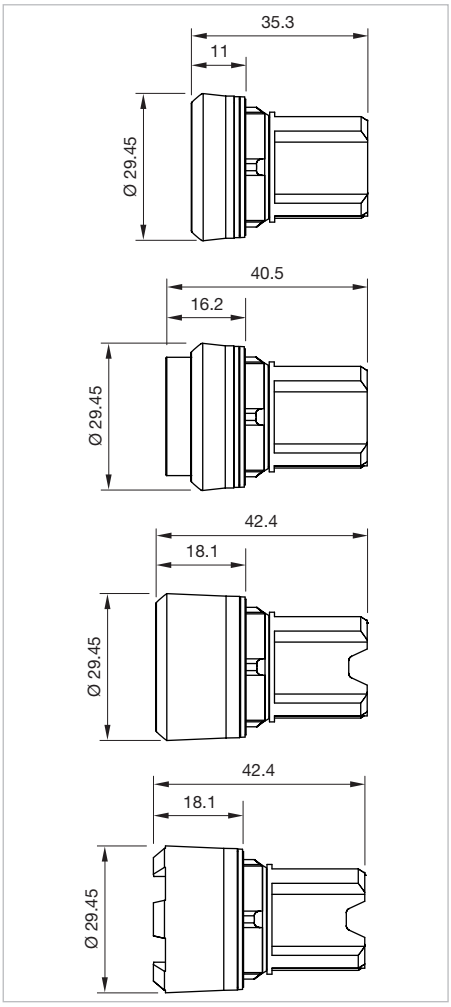

Dimensions [mm]

Equipment consisting of (schematic overview)

Actuator

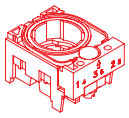

Holder *page 130*

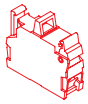

Switching element *page 132*

Each Part Number listed below includes all the black components shown in the 3D-drawing.

To obtain a complete unit, please select the red components from the pages shown.

Additional Information

- Mounting depth incl. front plate, see chapter «drawings»

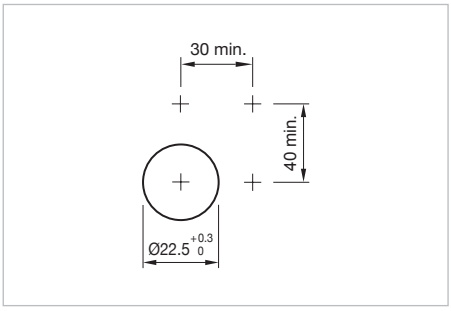

Mounting cut-outs [mm]

Product attribute	Front ring	Lens	Housing material	Switching action	Part No.	Wiring dia-gram	Weight
Pushbutton actuator, Momentary, Front dimension Ø 29.45 mm							
Lens level with front ring	Plastic black	Plastic black	Plastic	B	**45-2131.1110.000**	1	0.013 kg
Pushbutton actuator, Momentary, Front dimension Ø 29.45 mm							
Lens level with front ring	Plastic black	Plastic red	Plastic	B	**45-2131.1120.000**	1	0.013 kg
Pushbutton actuator, Momentary, Front dimension Ø 29.45 mm							
Lens level with front ring	Plastic black	Plastic yellow	Plastic	B	**45-2131.1140.000**	1	0.013 kg
Pushbutton actuator, Momentary, Front dimension Ø 29.45 mm							
Lens level with front ring	Plastic black	Plastic green	Plastic	B	**45-2131.1150.000**	1	0.013 kg
Pushbutton actuator, Momentary, Front dimension Ø 29.45 mm							
Lens level with front ring	Plastic black	Plastic blue	Plastic	B	**45-2131.1160.000**	1	0.013 kg
Pushbutton actuator, Momentary, Front dimension Ø 29.45 mm							
Lens level with front ring	Plastic black	Plastic grey	Plastic	B	**45-2131.1180.000**	1	0.013 kg
Pushbutton actuator, Momentary, Front dimension Ø 29.45 mm							
Lens level with front ring	Plastic black	Plastic white	Plastic	B	**45-2131.1190.000**	1	0.013 kg
Pushbutton actuator, Momentary, Front dimension Ø 29.45 mm							
Lens level with front ring	Plastic black	Plastic colourless	Plastic	B	**45-2131.11K0.000**	1	0.013 kg
Pushbutton actuator, Maintain, Front dimension Ø 29.45 mm							
Lens level with front ring	Plastic black	Plastic black	Plastic	C	**45-2134.1110.000**	2	0.013 kg

45 Raised design

Product attribute	Front ring	Lens	Housing material	Switching action	Part No.	Wiring dia-gram	Weight
Pushbutton actuator, Maintain, Front dimension Ø 29.45 mm							
Lens level with front ring	Plastic black	Plastic red	Plastic	C	**45-2134.1120.000**	2	0.013 kg
Pushbutton actuator, Maintain, Front dimension Ø 29.45 mm							
Lens level with front ring	Plastic black	Plastic yellow	Plastic	C	**45-2134.1140.000**	2	0.013 kg
Pushbutton actuator, Maintain, Front dimension Ø 29.45 mm							
Lens level with front ring	Plastic black	Plastic green	Plastic	C	**45-2134.1150.000**	2	0.013 kg
Pushbutton actuator, Maintain, Front dimension Ø 29.45 mm							
Lens level with front ring	Plastic black	Plastic blue	Plastic	C	**45-2134.1160.000**	2	0.013 kg
Pushbutton actuator, Maintain, Front dimension Ø 29.45 mm							
Lens level with front ring	Plastic black	Plastic white	Plastic	C	**45-2134.1190.000**	2	0.013 kg
Pushbutton actuator, Momentary, Front dimension Ø 29.45 mm							
Lens level with front ring	Metal sandgrey	Plastic black	Plastic	B	**45-2131.3110.000**	1	0.021 kg
Pushbutton actuator, Momentary, Front dimension Ø 29.45 mm							
Lens level with front ring	Metal sandgrey	Plastic red	Plastic	B	**45-2131.3120.000**	1	0.021 kg
Pushbutton actuator, Momentary, Front dimension Ø 29.45 mm							
Lens level with front ring	Metal sandgrey	Plastic yellow	Plastic	B	**45-2131.3140.000**	1	0.021 kg
Pushbutton actuator, Momentary, Front dimension Ø 29.45 mm							
Lens level with front ring	Metal sandgrey	Plastic green	Plastic	B	**45-2131.3150.000**	1	0.021 kg

Product attribute	Front ring	Lens	Housing material	Switching action	Part No.	Wiring dia-gram	Weight
Pushbutton actuator, Momentary, Front dimension Ø 29.45 mm							
Lens level with front ring	Metal sandgrey	Plastic blue	Plastic	B	**45-2131.3160.000**	1	0.021 kg
Pushbutton actuator, Momentary, Front dimension Ø 29.45 mm							
Lens level with front ring	Metal sandgrey	Plastic grey	Plastic	B	**45-2131.3180.000**	1	0.021 kg
Pushbutton actuator, Momentary, Front dimension Ø 29.45 mm							
Lens level with front ring	Metal sandgrey	Plastic white	Plastic	B	**45-2131.3190.000**	1	0.021 kg
Pushbutton actuator, Momentary, Front dimension Ø 29.45 mm							
Lens level with front ring	Metal sandgrey	Plastic colourless	Plastic	B	**45-2131.31K0.000**	1	0.021 kg
Pushbutton actuator, Maintain, Front dimension Ø 29.45 mm							
Lens level with front ring	Metal sandgrey	Plastic black	Plastic	C	**45-2134.3110.000**	2	0.021 kg
Pushbutton actuator, Maintain, Front dimension Ø 29.45 mm							
Lens level with front ring	Metal sandgrey	Plastic red	Plastic	C	**45-2134.3120.000**	2	0.021 kg
Pushbutton actuator, Maintain, Front dimension Ø 29.45 mm							
Lens level with front ring	Metal sandgrey	Plastic yellow	Plastic	C	**45-2134.3140.000**	2	0.021 kg
Pushbutton actuator, Maintain, Front dimension Ø 29.45 mm							
Lens level with front ring	Metal sandgrey	Plastic green	Plastic	C	**45-2134.3150.000**	2	0.021 kg
Pushbutton actuator, Maintain, Front dimension Ø 29.45 mm							
Lens level with front ring	Metal sandgrey	Plastic blue	Plastic	C	**45-2134.3160.000**	2	0.021 kg

45 Raised design

Product attribute	Front ring	Lens	Housing material	Switching action	Part No.	Wiring dia-gram	Weight
Pushbutton actuator, Maintain, Front dimension Ø 29.45 mm							
Lens level with front ring	Metal sandgrey	Plastic white	Plastic	C	**45-2134.3190.000**	2	0.021 kg
Pushbutton actuator, Momentary, Front dimension Ø 29.45 mm							
Lens level with front ring	Metal silver	Plastic black	Metal	B	**45-2131.2110.000**	1	0.048 kg
Pushbutton actuator, Momentary, Front dimension Ø 29.45 mm							
Lens level with front ring	Metal silver	Plastic red	Metal	B	**45-2131.2120.000**	1	0.048 kg
Pushbutton actuator, Momentary, Front dimension Ø 29.45 mm							
Lens level with front ring	Metal silver	Plastic yellow	Metal	B	**45-2131.2140.000**	1	0.048 kg
Pushbutton actuator, Momentary, Front dimension Ø 29.45 mm							
Lens level with front ring	Metal silver	Plastic green	Metal	B	**45-2131.2150.000**	1	0.048 kg
Pushbutton actuator, Momentary, Front dimension Ø 29.45 mm							
Lens level with front ring	Metal silver	Plastic blue	Metal	B	**45-2131.2160.000**	1	0.048 kg
Pushbutton actuator, Momentary, Front dimension Ø 29.45 mm							
Lens level with front ring	Metal silver	Plastic grey	Metal	B	**45-2131.2180.000**	1	0.048 kg
Pushbutton actuator, Momentary, Front dimension Ø 29.45 mm							
Lens level with front ring	Metal silver	Plastic white	Metal	B	**45-2131.2190.000**	1	0.048 kg
Pushbutton actuator, Momentary, Front dimension Ø 29.45 mm							
Lens level with front ring	Metal silver	Plastic colourless	Metal	B	**45-2131.21K0.000**	1	0.048 kg

Product attribute	Front ring	Lens	Housing material	Switching action	Part No.	Wiring dia-gram	Weight
Pushbutton actuator, Maintain, Front dimension Ø 29.45 mm							
Lens level with front ring	Metal silver	Plastic black	Metal	C	**45-2134.2110.000**	2	0.048 kg
Pushbutton actuator, Maintain, Front dimension Ø 29.45 mm							
Lens level with front ring	Metal silver	Plastic red	Metal	C	**45-2134.2120.000**	2	0.048 kg
Pushbutton actuator, Maintain, Front dimension Ø 29.45 mm							
Lens level with front ring	Metal silver	Plastic yellow	Metal	C	**45-2134.2140.000**	2	0.048 kg
Pushbutton actuator, Maintain, Front dimension Ø 29.45 mm							
Lens level with front ring	Metal silver	Plastic green	Metal	C	**45-2134.2150.000**	2	0.048 kg
Pushbutton actuator, Maintain, Front dimension Ø 29.45 mm							
Lens level with front ring	Metal silver	Plastic blue	Metal	C	**45-2134.2160.000**	2	0.048 kg
Pushbutton actuator, Maintain, Front dimension Ø 29.45 mm							
Lens level with front ring	Metal silver	Plastic white	Metal	C	**45-2134.2190.000**	2	0.048 kg
Pushbutton actuator, Momentary, Front dimension Ø 29.45 mm							
Lens raised above bezel	Plastic black	Plastic black	Plastic	B	**45-2131.1210.000**	1	0.013 kg
Pushbutton actuator, Momentary, Front dimension Ø 29.45 mm							
Lens raised above bezel	Plastic black	Plastic red	Plastic	B	**45-2131.1220.000**	1	0.013 kg
Pushbutton actuator, Momentary, Front dimension Ø 29.45 mm							
Lens raised above bezel	Plastic black	Plastic yellow	Plastic	B	**45-2131.1240.000**	1	0.013 kg

45 Raised design

Product attribute	Front ring	Lens	Housing material	Switching action	Part No.	Wiring dia-gram	Weight
Pushbutton actuator, Momentary, Front dimension Ø 29.45 mm							
Lens raised above bezel	Plastic black	Plastic green	Plastic	B	**45-2131.1250.000**	1	0.013 kg
Pushbutton actuator, Momentary, Front dimension Ø 29.45 mm							
Lens raised above bezel	Plastic black	Plastic blue	Plastic	B	**45-2131.1260.000**	1	0.013 kg
Pushbutton actuator, Momentary, Front dimension Ø 29.45 mm							
Lens raised above bezel	Plastic black	Plastic white	Plastic	B	**45-2131.1290.000**	1	0.013 kg
Pushbutton actuator, Momentary, Front dimension Ø 29.45 mm							
Lens raised above bezel	Metal sandgrey	Plastic black	Plastic	B	**45-2131.3210.000**	1	0.021 kg
Pushbutton actuator, Momentary, Front dimension Ø 29.45 mm							
Lens raised above bezel	Metal sandgrey	Plastic red	Plastic	B	**45-2131.3220.000**	1	0.021 kg
Pushbutton actuator, Momentary, Front dimension Ø 29.45 mm							
Lens raised above bezel	Metal sandgrey	Plastic yellow	Plastic	B	**45-2131.3240.000**	1	0.021 kg
Pushbutton actuator, Momentary, Front dimension Ø 29.45 mm							
Lens raised above bezel	Metal sandgrey	Plastic green	Plastic	B	**45-2131.3250.000**	1	0.021 kg
Pushbutton actuator, Momentary, Front dimension Ø 29.45 mm							
Lens raised above bezel	Metal sandgrey	Plastic blue	Plastic	B	**45-2131.3260.000**	1	0.021 kg
Pushbutton actuator, Momentary, Front dimension Ø 29.45 mm							
Lens raised above bezel	Metal sandgrey	Plastic white	Plastic	B	**45-2131.3290.000**	1	0.021 kg

Product attribute	Front ring	Lens	Housing material	Switching action	Part No.	Wiring dia-gram	Weight
Pushbutton actuator, Momentary, Front dimension Ø 29.45 mm							
Lens raised above bezel	Metal silver	Plastic black	Metal	B	**45-2131.2210.000**	1	0.021 kg
Pushbutton actuator, Momentary, Front dimension Ø 29.45 mm							
Lens raised above bezel	Metal silver	Plastic red	Metal	B	**45-2131.2220.000**	1	0.048 kg
Pushbutton actuator, Momentary, Front dimension Ø 29.45 mm							
Lens raised above bezel	Metal silver	Plastic yellow	Metal	B	**45-2131.2240.000**	1	0.048 kg
Pushbutton actuator, Momentary, Front dimension Ø 29.45 mm							
Lens raised above bezel	Metal silver	Plastic green	Metal	B	**45-2131.2250.000**	1	0.048 kg
Pushbutton actuator, Momentary, Front dimension Ø 29.45 mm							
Lens raised above bezel	Metal silver	Plastic blue	Metal	B	**45-2131.2260.000**	1	0.048 kg
Pushbutton actuator, Momentary, Front dimension Ø 29.45 mm							
Lens raised above bezel	Metal silver	Plastic white	Metal	B	**45-2131.2290.000**	1	0.048 kg
Pushbutton actuator, Maintain, Front dimension Ø 29.45 mm							
Lens raised above bezel	Metal silver	Plastic red	Metal	C	**45-2134.2220.000**	2	0.048 kg
Pushbutton actuator, Momentary, Front dimension Ø 29.45 mm							
Lens lower than front ring	Plastic black	Plastic black	Plastic	B	**45-2131.1310.000**	1	0.013 kg
Pushbutton actuator, Momentary, Front dimension Ø 29.45 mm							
Lens lower than front ring	Plastic black	Plastic red	Plastic	B	**45-2131.1320.000**	1	0.013 kg

45 Raised design

Product attribute	Front ring	Lens	Housing material	Switching action	Part No.	Wiring dia-gram	Weight
Pushbutton actuator, Momentary, Front dimension Ø 29.45 mm							
Lens lower than front ring	Plastic black	Plastic yellow	Plastic	B	**45-2131.1340.000**	1	0.013 kg
Pushbutton actuator, Momentary, Front dimension Ø 29.45 mm							
Lens lower than front ring	Plastic black	Plastic green	Plastic	B	**45-2131.1350.000**	1	0.013 kg
Pushbutton actuator, Momentary, Front dimension Ø 29.45 mm							
Lens lower than front ring	Plastic black	Plastic blue	Plastic	B	**45-2131.1360.000**	1	0.013 kg
Pushbutton actuator, Momentary, Front dimension Ø 29.45 mm							
Lens lower than front ring	Plastic black	Plastic white	Plastic	B	**45-2131.1390.000**	1	0.013 kg
Pushbutton actuator, Momentary, Front dimension Ø 29.45 mm							
Lens lower than front ring	Metal sandgrey	Plastic black	Plastic	B	**45-2131.3310.000**	1	0.021 kg
Pushbutton actuator, Momentary, Front dimension Ø 29.45 mm							
Lens lower than front ring	Metal sandgrey	Plastic red	Plastic	B	**45-2131.3320.000**	1	0.021 kg
Pushbutton actuator, Momentary, Front dimension Ø 29.45 mm							
Lens lower than front ring	Metal sandgrey	Plastic yellow	Plastic	B	**45-2131.3340.000**	1	0.021 kg
Pushbutton actuator, Momentary, Front dimension Ø 29.45 mm							
Lens lower than front ring	Metal sandgrey	Plastic green	Plastic	B	**45-2131.3350.000**	1	0.021 kg
Pushbutton actuator, Momentary, Front dimension Ø 29.45 mm							
Lens lower than front ring	Metal sandgrey	Plastic blue	Plastic	B	**45-2131.3360.000**	1	0.021 kg

Product attribute	Front ring	Lens	Housing material	Switching action	Part No.	Wiring dia-gram	Weight
Pushbutton actuator, Momentary, Front dimension Ø 29.45 mm							
Lens lower than front ring	Metal sandgrey	Plastic white	Plastic	B	**45-2131.3390.000**	1	0.021 kg
Pushbutton actuator, Momentary, Front dimension Ø 29.45 mm							
Lens lower than front ring	Metal silver	Plastic black	Metal	B	**45-2131.2310.000**	1	0.048 kg
Pushbutton actuator, Momentary, Front dimension Ø 29.45 mm							
Lens lower than front ring	Metal silver	Plastic red	Metal	B	**45-2131.2320.000**	1	0.048 kg
Pushbutton actuator, Momentary, Front dimension Ø 29.45 mm							
Lens lower than front ring	Metal silver	Plastic yellow	Metal	B	**45-2131.2340.000**	1	0.048 kg
Pushbutton actuator, Momentary, Front dimension Ø 29.45 mm							
Lens lower than front ring	Metal silver	Plastic green	Metal	B	**45-2131.2350.000**	1	0.048 kg
Pushbutton actuator, Momentary, Front dimension Ø 29.45 mm							
Lens lower than front ring	Metal silver	Plastic blue	Metal	B	**45-2131.2360.000**	1	0.048 kg
Pushbutton actuator, Momentary, Front dimension Ø 29.45 mm							
Lens lower than front ring	Metal silver	Plastic white	Metal	B	**45-2131.2390.000**	1	0.048 kg
Pushbutton actuator, Momentary, Front dimension Ø 29.45 mm							
Lens lover than front ring, with castellation	Plastic black	Plastic black	Plastic	B	**45-2131.1410.000**	1	0.013 kg
Pushbutton actuator, Momentary, Front dimension Ø 29.45 mm							
Lens lover than front ring, with castellation	Plastic black	Plastic red	Plastic	B	**45-2131.1420.000**	1	0.013 kg

45 Raised design

Product attribute	Front ring	Lens	Housing material	Switching action	Part No.	Wiring dia-gram	Weight
Pushbutton actuator, Momentary, Front dimension Ø 29.45 mm							
Lens lover than front ring, with castellation	Plastic black	Plastic yellow	Plastic	B	**45-2131.1440.000**	1	0.013 kg
Pushbutton actuator, Momentary, Front dimension Ø 29.45 mm							
Lens lover than front ring, with castellation	Plastic black	Plastic green	Plastic	B	**45-2131.1450.000**	1	0.013 kg
Pushbutton actuator, Momentary, Front dimension Ø 29.45 mm							
Lens lover than front ring, with castellation	Plastic black	Plastic blue	Plastic	B	**45-2131.1460.000**	1	0.013 kg
Pushbutton actuator, Momentary, Front dimension Ø 29.45 mm							
Lens lover than front ring, with castellation	Plastic black	Plastic white	Plastic	B	**45-2131.1490.000**	1	0.013 kg

Switching action: B = Momentary, C = Maintain

Wiring diagram 1	Wiring diagram 2

Double pushbutton, IP66, IP67, IP69K

Equipment consisting of (schematic overview)

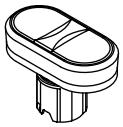

Actuator

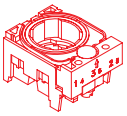

Holder *page 130*

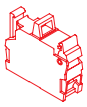

Switching element *page 132*

Each Part Number listed below includes all the black components shown in the 3D-drawing.

To obtain a complete unit, please select the red components from the pages shown.

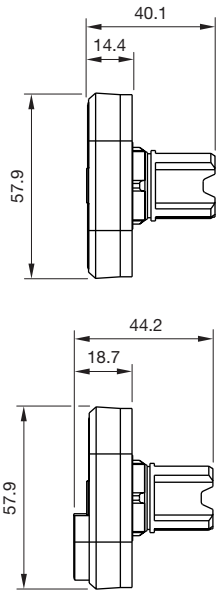

Dimensions [mm]

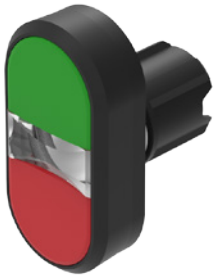

Product can differ from the current configuration.

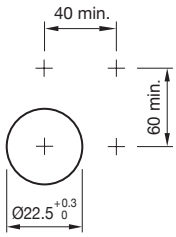

Mounting cut-outs [mm]

Additional Information

- Mounting depth incl. front plate, see chapter «drawings»

Product attribute	Front ring	Lens	Switching action	Part No.	Wiring diagram	Weight
Double pushbutton actuator, momentary, Front dimension 57.7 x 29.8 mm						
2 lenses, level with front ring	Plastic black	Plastic green-red	B	**45-2J31.16T0.000**	1	0.026 kg
Double pushbutton actuator, momentary, Front dimension 57.7 x 29.8 mm						
2 lenses, level with front ring	Plastic black	Plastic white-black	B	**45-2J31.16V0.000**	1	0.026 kg
Double pushbutton actuator, momentary, Front dimension 57.7 x 29.8 mm						
2 lenses, level with/raised above front ring	Plastic black	Plastic green-red	B	**45-2J31.15T0.000**	1	0.026 kg

45 Raised design

Product attribute	Front ring	Lens	Switching action	Part No.	Wiring diagram	Weight
Double pushbutton actuator, momentary, Front dimension 57.7 x 29.8 mm						
2 lenses, level with/raised above front ring	Plastic black	Plastic white-black	B	**45-2J31.15V0.000**	1	0.026 kg
Double pushbutton actuator, momentary, Front dimension 57.7 x 29.8 mm						
2 lenses, level with front ring	Metal sandgrey	Plastic green-red	B	**45-2J31.36T0.000**	1	0.043 kg
Double pushbutton actuator, momentary, Front dimension 57.7 x 29.8 mm						
2 lenses, level with front ring	Metal sandgrey	Plastic white-black	B	**45-2J31.36V0.000**	1	0.043 kg
Double pushbutton actuator, momentary, Front dimension 57.7 x 29.8 mm						
2 lenses, level with/raised above front ring	Metal sandgrey	Plastic green-red	B	**45-2J31.35T0.000**	1	0.043 kg
Double pushbutton actuator, momentary, Front dimension 57.7 x 29.8 mm						
2 lenses, level with front ring	Metal silver	Plastic green-red	B	**45-2J31.26T0.000**	1	0.068 kg
Double pushbutton actuator, momentary, Front dimension 57.7 x 29.8 mm						
2 lenses, level with front ring	Metal silver	Plastic white-black	B	**45-2J31.26V0.000**	1	0.068 kg
Double pushbutton actuator, momentary, Front dimension 57.7 x 29.8 mm						
2 lenses, level with/raised above front ring	Metal silver	Plastic green-red	B	**45-2J31.25T0.000**	1	0.068 kg
Double pushbutton actuator, momentary, Front dimension 57.7 x 29.8 mm						
2 lenses, level with/raised above front ring	Metal silver	Plastic white-black	B	**45-2J31.25V0.000**	1	0.068 kg

Switching action: B = Momentary

Wiring diagram 1

Illuminated pushbutton, IP66, IP67, IP69K

Equipment consisting of (schematic overview)

Actuator

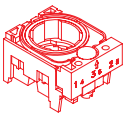

Holder *page 130*

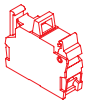

Switching element *page 132*

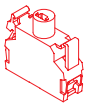

Illumination element *page 134*

Each Part Number listed below includes all the black components shown in the 3D-drawing.

To obtain a complete unit, please select the red components from the pages shown.

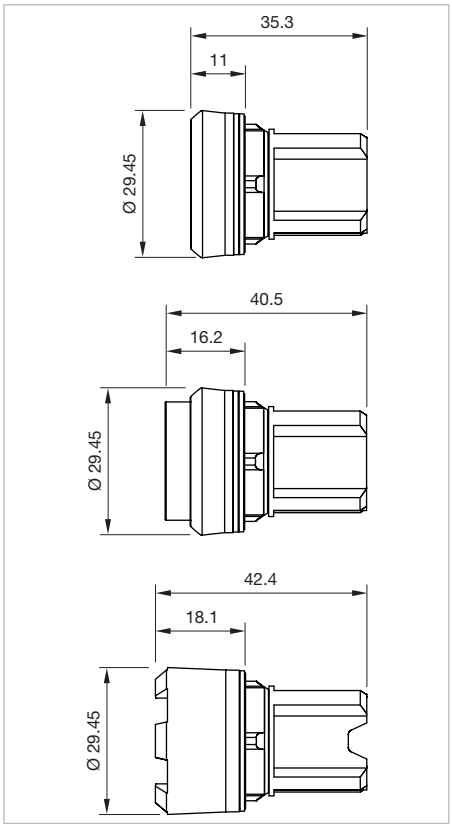

Dimensions [mm]

Product can differ from the current configuration.

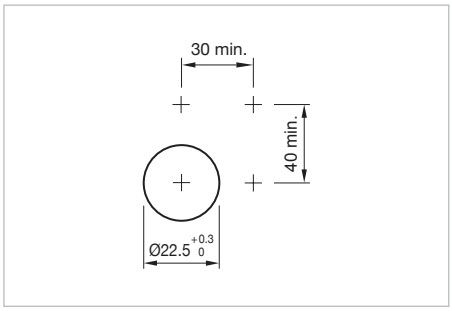

Mounting cut-outs [mm]

Additional Information

- Mounting depth incl. front plate, see chapter «drawings»

Product attribute	Front ring	Lens	Housing material	Switching action	Part No.	Wiring diagram	Weight
Illuminated pushbutton actuator, Momentary, Front dimension Ø 29.45 mm							
Lens level with front ring	Plastic black	Plastic amber transparency	Plastic	B	**45-2231.11F0.000**	1	0.011 kg
Illuminated pushbutton actuator, Momentary, Front dimension Ø 29.45 mm							
Lens level with front ring	Plastic black	Plastic red transparent	Plastic	B	**45-2231.11E0.000**	1	0.011 kg

45 Raised design

Product attribute	Front ring	Lens	Housing material	Switching action	Part No.	Wiring diagram	Weight
Illuminated pushbutton actuator, Momentary, Front dimension Ø 29.45 mm							
Lens level with front ring	Plastic black	Plastic yellow transparent	Plastic	B	**45-2231.11G0.000**	1	0.011 kg
Illuminated pushbutton actuator, Momentary, Front dimension Ø 29.45 mm							
Lens level with front ring	Plastic black	Plastic green transparent	Plastic	B	**45-2231.11H0.000**	1	0.011 kg
Illuminated pushbutton actuator, Momentary, Front dimension Ø 29.45 mm							
Lens level with front ring	Plastic black	Plastic blue transparent	Plastic	B	**45-2231.11J0.000**	1	0.011 kg
Illuminated pushbutton actuator, Momentary, Front dimension Ø 29.45 mm							
Lens level with front ring	Plastic black	Plastic white transparent	Plastic	B	**45-2231.11N0.000**	1	0.011 kg
Illuminated pushbutton actuator, Momentary, Front dimension Ø 29.45 mm							
Lens level with front ring	Plastic black	Plastic colourless transparent	Plastic	B	**45-2231.11K0.000**	1	0.011 kg
Illuminated pushbutton actuator, Maintain, Front dimension Ø 29.45 mm							
Lens level with front ring	Plastic black	Plastic red transparent	Plastic	C	**45-2234.11E0.000**	2	0.011 kg
Illuminated pushbutton actuator, Maintain, Front dimension Ø 29.45 mm							
Lens level with front ring	Plastic black	Plastic yellow transparent	Plastic	C	**45-2234.11G0.000**	2	0.011 kg
Illuminated pushbutton actuator, Maintain, Front dimension Ø 29.45 mm							
Lens level with front ring	Plastic black	Plastic green transparent	Plastic	C	**45-2234.11H0.000**	2	0.011 kg
Illuminated pushbutton actuator, Maintain, Front dimension Ø 29.45 mm							
Lens level with front ring	Plastic black	Plastic blue transparent	Plastic	C	**45-2234.11J0.000**	2	0.011 kg

Product attribute	Front ring	Lens	Housing material	Switching action	Part No.	Wiring dia-gram	Weight
Illuminated pushbutton actuator, Maintain, Front dimension Ø 29.45 mm							
Lens level with front ring	Plastic black	Plastic white transparent	Plastic	C	**45-2234.11N0.000**	2	0.011 kg
Illuminated pushbutton actuator, Maintain, Front dimension Ø 29.45 mm							
Lens level with front ring	Plastic black	Plastic colourless trans-parent	Plastic	C	**45-2234.11K0.000**	2	0.011 kg
Illuminated pushbutton actuator, Momentary, Front dimension Ø 29.45 mm							
Lens level with front ring	Metal sandgrey	Plastic amber transpa-rency	Plastic	B	**45-2231.31F0.000**	1	0.020 kg
Illuminated pushbutton actuator, Momentary, Front dimension Ø 29.45 mm							
Lens level with front ring	Metal sandgrey	Plastic red transparent	Plastic	B	**45-2231.31E0.000**	1	0.020 kg
Illuminated pushbutton actuator, Momentary, Front dimension Ø 29.45 mm							
Lens level with front ring	Metal sandgrey	Plastic yellow trans-parent	Plastic	B	**45-2231.31G0.000**	1	0.020 kg
Illuminated pushbutton actuator, Momentary, Front dimension Ø 29.45 mm							
Lens level with front ring	Metal sandgrey	Plastic green transparent	Plastic	B	**45-2231.31H0.000**	1	0.020 kg
Illuminated pushbutton actuator, Momentary, Front dimension Ø 29.45 mm							
Lens level with front ring	Metal sandgrey	Plastic blue transparent	Plastic	B	**45-2231.31J0.000**	1	0.020 kg
Illuminated pushbutton actuator, Momentary, Front dimension Ø 29.45 mm							
Lens level with front ring	Metal sandgrey	Plastic white transparent	Plastic	B	**45-2231.31N0.000**	1	0.020 kg
Illuminated pushbutton actuator, Momentary, Front dimension Ø 29.45 mm							
Lens level with front ring	Metal sandgrey	Plastic colourless trans-parent	Plastic	B	**45-2231.31K0.000**	1	0.020 kg

45 Raised design

Product attribute	Front ring	Lens	Housing material	Switching action	Part No.	Wiring dia-gram	Weight
Illuminated pushbutton actuator, Maintain, Front dimension Ø 29.45 mm							
Lens level with front ring	Metal sandgrey	Plastic red transparent	Plastic	C	**45-2234.31E0.000**	2	0.020 kg
Illuminated pushbutton actuator, Maintain, Front dimension Ø 29.45 mm							
Lens level with front ring	Metal sandgrey	Plastic yellow trans-parent	Plastic	C	**45-2234.31G0.000**	2	0.020 kg
Illuminated pushbutton actuator, Maintain, Front dimension Ø 29.45 mm							
Lens level with front ring	Metal sandgrey	Plastic green transparent	Plastic	C	**45-2234.31H0.000**	2	0.020 kg
Illuminated pushbutton actuator, Maintain, Front dimension Ø 29.45 mm							
Lens level with front ring	Metal sandgrey	Plastic blue transparent	Plastic	C	**45-2234.31J0.000**	2	0.020 kg
Illuminated pushbutton actuator, Maintain, Front dimension Ø 29.45 mm							
Lens level with front ring	Metal sandgrey	Plastic white transparent	Plastic	C	**45-2234.31N0.000**	2	0.020 kg
Illuminated pushbutton actuator, Maintain, Front dimension Ø 29.45 mm							
Lens level with front ring	Metal sandgrey	Plastic colourless trans-parent	Plastic	C	**45-2234.31K0.000**	2	0.020 kg
Illuminated pushbutton actuator, Momentary, Front dimension Ø 29.45 mm							
Lens level with front ring	Metal silver	Plastic amber transpa-rency	Metal	B	**45-2231.21F0.000**	1	0.032 kg
Illuminated pushbutton actuator, Momentary, Front dimension Ø 29.45 mm							
Lens level with front ring	Metal silver	Plastic red transparent	Metal	B	**45-2231.21E0.000**	1	0.032 kg
Illuminated pushbutton actuator, Momentary, Front dimension Ø 29.45 mm							
Lens level with front ring	Metal silver	Plastic yellow trans-parent	Metal	B	**45-2231.21G0.000**	1	0.032 kg

Product attribute	Front ring	Lens	Housing material	Switching action	Part No.	Wiring dia-gram	Weight
Illuminated pushbutton actuator, Momentary, Front dimension Ø 29.45 mm							
Lens level with front ring	Metal silver	Plastic green transparent	Metal	B	**45-2231.21H0.000**	1	0.032 kg
Illuminated pushbutton actuator, Momentary, Front dimension Ø 29.45 mm							
Lens level with front ring	Metal silver	Plastic blue transparent	Metal	B	**45-2231.21J0.000**	1	0.032 kg
Illuminated pushbutton actuator, Momentary, Front dimension Ø 29.45 mm							
Lens level with front ring	Metal silver	Plastic white transparent	Metal	B	**45-2231.21N0.000**	1	0.032 kg
Illuminated pushbutton actuator, Momentary, Front dimension Ø 29.45 mm							
Lens level with front ring	Metal silver	Plastic colourless trans-parent	Metal	B	**45-2231.21K0.000**	1	0.032 kg
Illuminated pushbutton actuator, Maintain, Front dimension Ø 29.45 mm							
Lens level with front ring	Metal silver	Plastic red transparent	Metal	C	**45-2234.21E0.000**	2	0.032 kg
Illuminated pushbutton actuator, Maintain, Front dimension Ø 29.45 mm							
Lens level with front ring	Metal silver	Plastic yellow trans-parent	Metal	C	**45-2234.21G0.000**	2	0.032 kg
Illuminated pushbutton actuator, Maintain, Front dimension Ø 29.45 mm							
Lens level with front ring	Metal silver	Plastic green transparent	Metal	C	**45-2234.21H0.000**	2	0.032 kg
Illuminated pushbutton actuator, Maintain, Front dimension Ø 29.45 mm							
Lens level with front ring	Metal silver	Plastic blue transparent	Metal	C	**45-2234.21J0.000**	2	0.032 kg
Illuminated pushbutton actuator, Maintain, Front dimension Ø 29.45 mm							
Lens level with front ring	Metal silver	Plastic white transparent	Metal	C	**45-2234.21N0.000**	2	0.032 kg

45 Raised design

Product attribute	Front ring	Lens	Housing material	Switching action	Part No.	Wiring diagram	Weight
Illuminated pushbutton actuator, Maintain, Front dimension Ø 29.45 mm							
Lens level with front ring	Metal silver	Plastic colourless transparent	Metal	C	**45-2234.21K0.000**	2	0.032 kg
Illuminated pushbutton actuator, Momentary, Front dimension Ø 29.45 mm							
Lens raised above bezel	Plastic black	Plastic red transparent	Plastic	B	**45-2231.12E0.000**	1	0.011 kg
Illuminated pushbutton actuator, Momentary, Front dimension Ø 29.45 mm							
Lens raised above bezel	Plastic black	Plastic yellow transparent	Plastic	B	**45-2231.12G0.000**	1	0.011 kg
Illuminated pushbutton actuator, Momentary, Front dimension Ø 29.45 mm							
Lens raised above bezel	Plastic black	Plastic green transparent	Plastic	B	**45-2231.12H0.000**	1	0.011 kg
Illuminated pushbutton actuator, Momentary, Front dimension Ø 29.45 mm							
Lens raised above bezel	Plastic black	Plastic blue transparent	Plastic	B	**45-2231.12J0.000**	1	0.011 kg
Illuminated pushbutton actuator, Momentary, Front dimension Ø 29.45 mm							
Lens raised above bezel	Plastic black	Plastic colourless transparent	Plastic	B	**45-2231.12K0.000**	1	0.011 kg
Illuminated pushbutton actuator, Momentary, Front dimension Ø 29.45 mm							
Lens raised above bezel	Metal sandgrey	Plastic red transparent	Plastic	B	**45-2231.32E0.000**	1	0.020 kg
Illuminated pushbutton actuator, Momentary, Front dimension Ø 29.45 mm							
Lens raised above bezel	Metal sandgrey	Plastic yellow transparent	Plastic	B	**45-2231.32G0.000**	1	0.020 kg
Illuminated pushbutton actuator, Momentary, Front dimension Ø 29.45 mm							
Lens raised above bezel	Metal sandgrey	Plastic green transparent	Plastic	B	**45-2231.32H0.000**	1	0.020 kg

Product attribute	Front ring	Lens	Housing material	Switching action	Part No.	Wiring diagram	Weight
Illuminated pushbutton actuator, Momentary, Front dimension Ø 29.45 mm							
Lens raised above bezel	Metal sandgrey	Plastic blue transparent	Plastic	B	**45-2231.32J0.000**	1	0.020 kg
Illuminated pushbutton actuator, Momentary, Front dimension Ø 29.45 mm							
Lens raised above bezel	Metal sandgrey	Plastic colourless transparent	Plastic	B	**45-2231.32K0.000**	1	0.020 kg
Illuminated pushbutton actuator, Momentary, Front dimension Ø 29.45 mm							
Lens raised above bezel	Metal silver	Plastic red transparent	Metal	B	**45-2231.22E0.000**	1	0.032 kg
Illuminated pushbutton actuator, Momentary, Front dimension Ø 29.45 mm							
Lens raised above bezel	Metal silver	Plastic amber transparency	Metal	B	**45-2231.22F0.000**	1	0.032 kg
Illuminated pushbutton actuator, Momentary, Front dimension Ø 29.45 mm							
Lens raised above bezel	Metal silver	Plastic yellow transparent	Metal	B	**45-2231.22G0.000**	1	0.032 kg
Illuminated pushbutton actuator, Momentary, Front dimension Ø 29.45 mm							
Lens raised above bezel	Metal silver	Plastic green transparent	Metal	B	**45-2231.22H0.000**	1	0.032 kg
Illuminated pushbutton actuator, Momentary, Front dimension Ø 29.45 mm							
Lens raised above bezel	Metal silver	Plastic blue transparent	Metal	B	**45-2231.22J0.000**	1	0.032 kg
Illuminated pushbutton actuator, Momentary, Front dimension Ø 29.45 mm							
Lens raised above bezel	Metal silver	Plastic colourless transparent	Metal	B	**45-2231.22K0.000**	1	0.032 kg

45 Raised design

Product attribute	Front ring	Lens	Housing material	Switching action	Part No.	Wiring diagram	Weight
Illuminated pushbutton actuator, Momentary, Front dimension Ø 29.45 mm							
Lens raised above bezel	Metal silver	Plastic white transparent	Metal	B	**45-2231.22N0.000**	1	0.032 kg
Illuminated pushbutton actuator, Momentary, Front dimension Ø 29.45 mm							
Lens lover than front ring, with castellation	Plastic black	Plastic blue transparent	Plastic	B	**45-2231.14J0.000**	1	0.011 kg

Switching action: B = Momentary, C = Maintain

Wiring diagram 1	Wiring diagram 2

Illuminated double pushbutton, IP66, IP67, IP69K

Equipment consisting of (schematic overview)

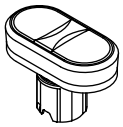

Actuator

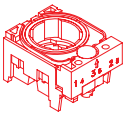

Holder *page 130*

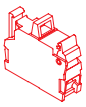

Switching element *page 132*

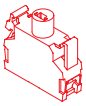

Illumination element *page 134*

Each Part Number listed below includes all the black components shown in the 3D-drawing.

To obtain a complete unit, please select the red components from the pages shown.

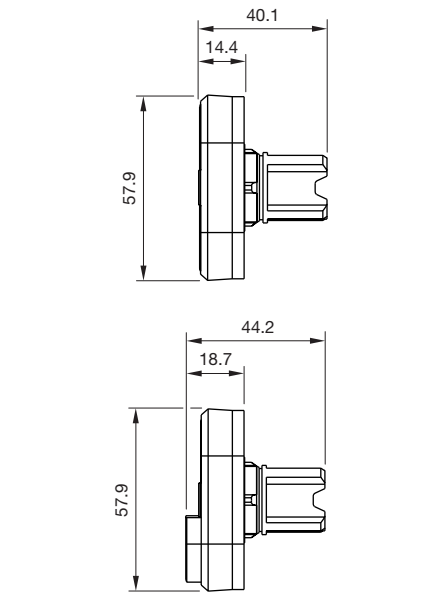

Dimensions [mm]

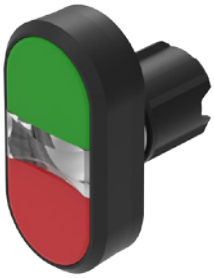

Product can differ from the current configuration.

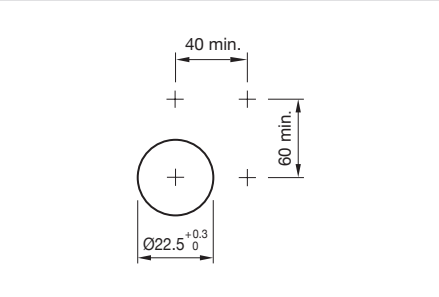

Mounting cut-outs [mm]

Additional Information

- Mounting depth incl. front plate, see chapter «drawings»
- With illuminative centre window

Product attribute	Front ring	Lens	Switching action	Part No.	Component layout	Wiring diagram	Weight
Illuminated double pushbutton actuator, Momentary, Front dimension 57.7 x 29.8 mm							
2 lenses, level with front ring	Plastic black	Plastic green-red	B	**45-2K31.16T0.000**	4	1	0.025 kg
Illuminated double pushbutton actuator, Momentary, Front dimension 57.7 x 29.8 mm							
2 lenses, level with front ring	Plastic black	Plastic white-black	B	**45-2K31.16V0.000**	4	1	0.025 kg
Illuminated double pushbutton actuator, Momentary, Front dimension 57.7 x 29.8 mm							
2 lenses, level with/raised above front ring	Plastic black	Plastic green-red	B	**45-2K31.15T0.000**	4	1	0.025 kg

45 Raised design

Product attribute	Front ring	Lens	Switching action	Part No.	Bauteile-Layout	Wiring dia-gram	Weight
Illuminated double pushbutton actuator, Momentary, Front dimension 57.7 x 29.8 mm							
2 lenses, level with/raised above front ring	Plastic black	Plastic white-black	B	**45-2K31.15V0.000**	4	1	0.025 kg
Illuminated double pushbutton actuator, Momentary, Front dimension 57.7 x 29.8 mm							
2 lenses, level with front ring	Metal sandgrey	Plastic green-red	B	**45-2K31.36T0.000**	4	1	0.043 kg
Illuminated double pushbutton actuator, Momentary, Front dimension 57.7 x 29.8 mm							
2 lenses, level with front ring	Metal sandgrey	Plastic white-black	B	**45-2K31.36V0.000**	4	1	0.043 kg
Illuminated double pushbutton actuator, Momentary, Front dimension 57.7 x 29.8 mm							
2 lenses, level with/raised above front ring	Metal sandgrey	Plastic green-red	B	**45-2K31.35T0.000**	4	1	0.043 kg
Illuminated double pushbutton actuator, Momentary, Front dimension 57.7 x 29.8 mm							
2 lenses, level with/raised above front ring	Metal sandgrey	Plastic white-black	B	**45-2K31.35V0.000**	4	1	0.043 kg

Switching action: B = Momentary
The component layouts you will find from page 144

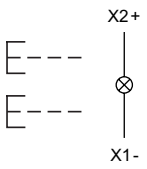

Wiring diagram 1

Emergency-stop switch foolproof, EN IEC 60947-5-5, IP66, IP67, IP69K

Equipment consisting of (schematic overview)

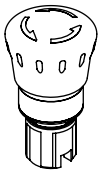

Actuator

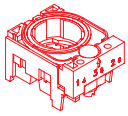

Holder *page 130*

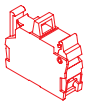

Switching element *page 132*

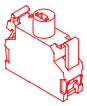

Illumination element *page 134*

Each Part Number listed below includes all the black components shown in the 3D-drawing.

To obtain a complete unit, please select the red components from the pages shown.

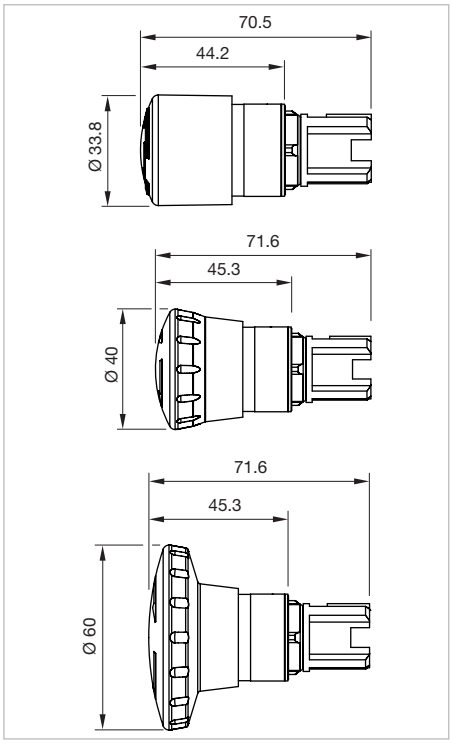

Dimensions [mm]

Product can differ from the current configuration.

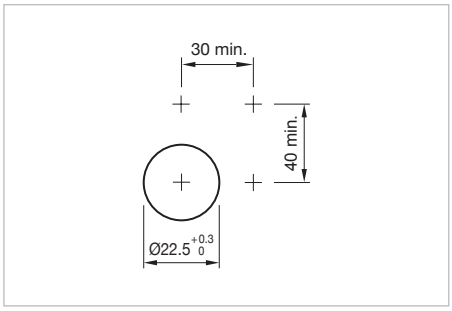

Mounting cut-outs [mm]

Additional Information

- Mounting depth incl. front plate, see chapter «drawings»
- The standard lock: RONIS, T254
- Two keys are supplied with each key lock switch

Product attribute	Front ring	Lens	Switching action	Part No.	Wiring diagram	Weight
Emergency-stop switch actuator, foolproof EN IEC 60947-5-5, Front dimension Ø 33.8 mm						
twist to release	Plastic black	Plastic red	C	**45-2C36.1820.000**	1	0.046 kg
Emergency-stop switch actuator, foolproof EN IEC 60947-5-5, Front dimension Ø 33.8 mm						
twist to release, illuminable	Plastic black	Plastic red	C	**45-2D36.1820.000**	2	0.046 kg

45 Raised design

Product attribute	Front ring	Lens	Switching action	Part No.	Wiring dia-gram	Weight
Emergency-stop switch actuator, foolproof EN IEC 60947-5-5, Front dimension Ø 33.8 mm						
twist to release, illuminable	Metall silber	Plastic red	C	**45-2D36.2820.000**	2	0.046 kg
Emergency-stop switch actuator, foolproof EN IEC 60947-5-5, Front dimension Ø 40 mm						
twist to release	Plastic black	Plastic red	C	**45-2C36.1920.000**	1	0.046 kg
Emergency-stop switch actuator, foolproof EN IEC 60947-5-5, Front dimension Ø 40 mm						
Pull release	Plastic black	Plastic red	C	**45-2C37.1920.000**	1	0.046 kg
Emergency-stop switch actuator, foolproof EN IEC 60947-5-5, Front dimension Ø 40 mm						
twist to release, illuminable	Plastic black	Plastic red	C	**45-2D36.1920.000**	2	0.046 kg
Emergency-stop switch actuator, foolproof EN IEC 60947-5-5, Front dimension Ø 60 mm						
twist to release	Plastic black	Plastic red	C	**45-2C36.1A20.000**	1	0.056 kg
Emergency-stop switch actuator, foolproof EN IEC 60947-5-5, Front dimension Ø 60 mm						
twist to release, illuminable	Plastic black	Plastic red	C	**45-2D36.1A20.000**	2	0.053 kg
Emergency-stop switch actuator, foolproof EN IEC 60947-5-5, Front dimension Ø 40 mm						
key to release	Plastic black	Plastic red	C	**45-2C35.1920.110**	1	0.083 kg

Switching action: C = Maintain

	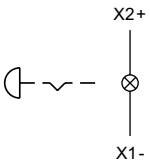
Wiring diagram 1	Wiring diagram 2

Stop switch actuator, foolproof, IP66, IP67, IP69K

Equipment consisting of (schematic overview)

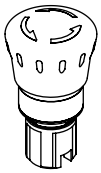

Actuator

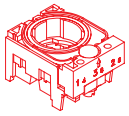

Holder *page 130*

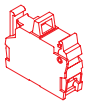

Switching element *page 132*

Each Part Number listed below includes all the black components shown in the 3D-drawing.

To obtain a complete unit, please select the red components from the pages shown.

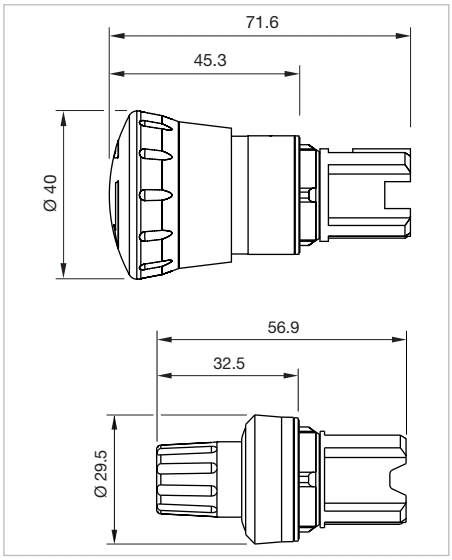

Dimensions [mm]

Product can differ from the current configuration.

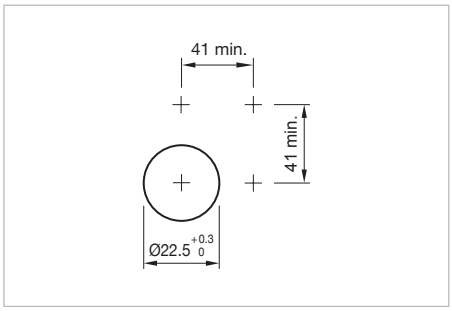

Mounting cut-outs [mm]

Additional Information

- Mounting depth incl. front plate, see chapter «drawings»

Product attribute	Front ring	Lens	Switching action	Lever	Part No.	Wiring diagram	Weight
Stop switch actuator, foolproof, Front dimension Ø 40 mm							
twist to release	Plastic black	Plastic black	C	–	**45-2736.1910.000**	1	0.036 kg
Stop switch actuator, foolproof, Front dimension Ø 40 mm							
twist to release	Plastic black	Plastic blue	C	–	**45-2736.1960.000**	1	0.046 kg

45 Raised design

Product attribute	Front ring	Lens	Switching action	Lever	Part No.	Wiring dia-gram	Weight
Stop switch actuator, foolproof, Front dimension Ø 29.5 mm							
twist to release, can be latched after pressing by rotating to the right	Plastic black	–	C	Plastic black	**45-2729.1010.000**	1	0.018 kg
Stop switch actuator, foolproof, Front dimension Ø 29.5 mm							
twist to release, can be latched after pressing by rotating to the right	Plastic black	–	C	Plastic red	**45-2729.1020.000**	1	0.018 kg

Switching action: C = Maintain

Wiring diagram 1

Mushroom-head pushbutton Ø 30 mm, IP66, IP67, IP69K

Equipment consisting of (schematic overview)

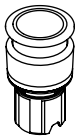

Actuator

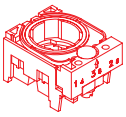

Holder *page 130*

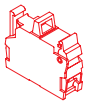

Switching element *page 132*

Each Part Number listed below includes all the black components shown in the 3D-drawing.

To obtain a complete unit, please select the red components from the pages shown.

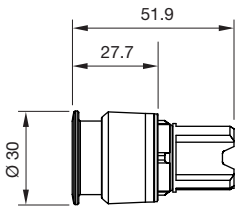

Dimensions [mm]

Product can differ from the current configuration.

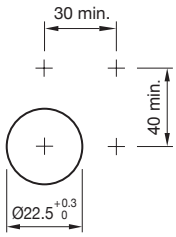

Mounting cut-outs [mm]

Additional Information

- Mounting depth incl. front plate, see chapter «drawings»

Front ring	Lens	Housing material	Switching action	Part No.	Wiring diagram	Weight
Mushroom-head pushbutton actuator, Maintain, Front dimension Ø 30 mm						
Plastic black	Plastic black	Plastic	C	**45-2530.1810.000**	2	0.020 kg
Mushroom-head pushbutton actuator, Maintain, Front dimension Ø 30 mm						
Plastic black	Plastic red	Plastic	C	**45-2530.1820.000**	2	0.020 kg
Mushroom-head pushbutton actuator, Maintain, Front dimension Ø 30 mm						
Plastic black	Plastic yellow	Plastic	C	**45-2530.1840.000**	2	0.020 kg
Mushroom-head pushbutton actuator, Momentary, Front dimension Ø 30 mm						
Plastic black	Plastic black	Plastic	B	**45-2531.1810.000**	1	0.020 kg
Mushroom-head pushbutton actuator, Momentary, Front dimension Ø 30 mm						
Plastic black	Plastic red	Plastic	B	**45-2531.1820.000**	1	0.020 kg

45 Raised design

Front ring	Lens	Housing material	Switching action	Part No.	Wiring dia-gram	Weight
Mushroom-head pushbutton actuator, Momentary, Front dimension Ø 30 mm						
Plastic black	Plastic yellow	Plastic	B	**45-2531.1840.000**	1	0.020 kg
Mushroom-head pushbutton actuator, Momentary, Front dimension Ø 30 mm						
Plastic black	Plastic green	Plastic	B	**45-2531.1850.000**	1	0.020 kg
Mushroom-head pushbutton actuator, Maintain, Front dimension Ø 30 mm						
Metal sandgrey	Plastic black	Plastic	C	**45-2530.3810.000**	2	0.034 kg
Mushroom-head pushbutton actuator, Maintain, Front dimension Ø 30 mm						
Metal sandgrey	Plastic red	Plastic	C	**45-2530.3820.000**	2	0.034 kg
Mushroom-head pushbutton actuator, Momentary, Front dimension Ø 30 mm						
Metal sandgrey	Plastic black	Plastic	B	**45-2531.3810.000**	1	0.034 kg
Mushroom-head pushbutton actuator, Momentary, Front dimension Ø 30 mm						
Metal sandgrey	Plastic red	Plastic	B	**45-2531.3820.000**	1	0.034 kg
Mushroom-head pushbutton actuator, Momentary, Front dimension Ø 30 mm						
Metal sandgrey	Plastic yellow	Plastic	B	**45-2531.3840.000**	1	0.034 kg
Mushroom-head pushbutton actuator, Momentary, Front dimension Ø 30 mm						
Metal sandgrey	Plastic green	Plastic	B	**45-2531.3850.000**	1	0.034 kg
Mushroom-head pushbutton actuator, Maintain, Front dimension Ø 30 mm						
Metal silver	Plastic black	Metal	C	**45-2530.2810.000**	2	0.052 kg

Front ring	Lens	Housing material	Switching action	Part No.	Wiring dia-gram	Weight
Mushroom-head pushbutton actuator, Maintain, Front dimension Ø 30 mm						
Metal silver	Plastic red	Metal	C	**45-2530.2820.000**	2	0.052 kg
Mushroom-head pushbutton actuator, Momentary, Front dimension Ø 30 mm						
Metal silver	Plastic black	Metal	B	**45-2531.2810.000**	1	0.052 kg
Mushroom-head pushbutton actuator, Momentary, Front dimension Ø 30 mm						
Metal silver	Plastic red	Metal	B	**45-2531.2820.000**	1	0.052 kg
Mushroom-head pushbutton actuator, Momentary, Front dimension Ø 30 mm						
Metal silver	Plastic yellow	Metal	B	**45-2531.2840.000**	1	0.052 kg
Mushroom-head pushbutton actuator, Momentary, Front dimension Ø 30 mm						
Metal silver	Plastic green	Metal	B	**45-2531.2850.000**	1	0.052 kg

Switching action: B = Momentary, C = Maintain

Wiring diagram 1	Wiring diagram 2

Mushroom-head pushbutton Ø 40 mm, IP66, IP67, IP69K

Product can differ from the current configuration.

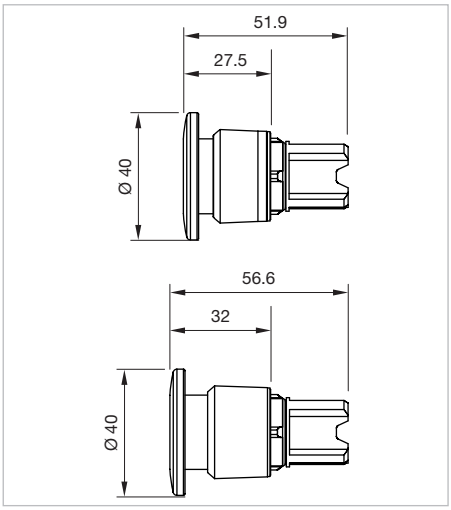

Dimensions [mm]

Equipment consisting of (schematic overview)

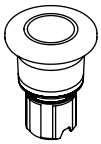

Actuator

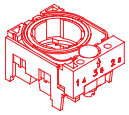

Holder *page 130*

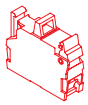

Switching element *page 132*

Each Part Number listed below includes all the black components shown in the 3D-drawing.

To obtain a complete unit, please select the red components from the pages shown.

Additional Information

- Mounting depth incl. front plate, see chapter «drawings»

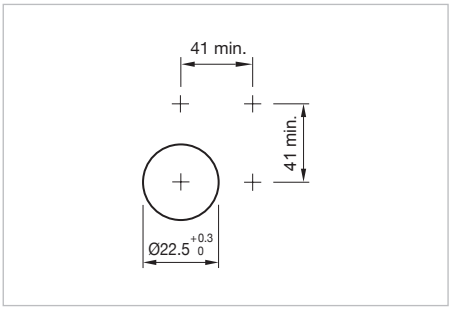

Mounting cut-outs [mm]

Front ring	Lens	Housing material	Switching action	Part No.	Wiring diagram	Weight
Mushroom-head pushbutton actuator, Maintain, Front dimension Ø 40 mm						
Plastic black	Plastic black	Plastic	C	**45-2530.1910.000**	2	0.022 kg
Mushroom-head pushbutton actuator, Maintain, Front dimension Ø 40 mm						
Plastic black	Plastic red	Plastic	C	**45-2530.1920.000**	2	0.020 kg
Mushroom-head pushbutton actuator, Maintain, Front dimension Ø 40 mm						
Plastic black	Plastic yellow	Plastic	C	**45-2530.1940.000**	2	0.020 kg
Mushroom-head pushbutton actuator, Maintain, Front dimension Ø 40 mm						
Plastic black	Plastic green	Plastic	C	**45-2530.1950.000**	2	0.020 kg

Front ring	Lens	Housing material	Switching action	Part No.	Wiring dia-gram	Weight
Mushroom-head pushbutton actuator, Momentary, Front dimension Ø 40 mm						
Plastic black	Plastic black	Plastic	B	**45-2531.1910.000**	1	0.020 kg
Mushroom-head pushbutton actuator, Momentary, Front dimension Ø 40 mm						
Plastic black	Plastic red	Plastic	B	**45-2531.1920.000**	1	0.020 kg
Mushroom-head pushbutton actuator, Momentary, Front dimension Ø 40 mm						
Plastic black	Plastic yellow	Plastic	B	**45-2531.1940.000**	1	0.020 kg
Mushroom-head pushbutton actuator, Momentary, Front dimension Ø 40 mm						
Plastic black	Plastic green	Plastic	B	**45-2531.1950.000**	1	0.020 kg
Mushroom-head pushbutton actuator, Maintain, Front dimension Ø 40 mm						
Metal sandgrey	Plastic black	Plastic	C	**45-2530.3910.000**	2	0.034 kg
Mushroom-head pushbutton actuator, Maintain, Front dimension Ø 40 mm						
Metal sandgrey	Plastic red	Plastic	C	**45-2530.3920.000**	2	0.034 kg
Mushroom-head pushbutton actuator, Momentary, Front dimension Ø 40 mm						
Metal sandgrey	Plastic black	Plastic	B	**45-2531.3910.000**	1	0.034 kg
Mushroom-head pushbutton actuator, Momentary, Front dimension Ø 40 mm						
Metal sandgrey	Plastic red	Plastic	B	**45-2531.3920.000**	1	0.034 kg
Mushroom-head pushbutton actuator, Momentary, Front dimension Ø 40 mm						
Metal sandgrey	Plastic yellow	Plastic	B	**45-2531.3940.000**	1	0.034 kg

45 Raised design

Front ring	Lens	Housing material	Switching action	Part No.	Wiring dia-gram	Weight
Mushroom-head pushbutton actuator, Momentary, Front dimension Ø 40 mm						
Metal sandgrey	Plastic green	Plastic	B	**45-2531.3950.000**	1	0.034 kg
Mushroom-head pushbutton actuator, Maintain, Front dimension Ø 40 mm						
Metal silver	Plastic black	Metal	C	**45-2530.2910.000**	2	0.052 kg
Mushroom-head pushbutton actuator, Maintain, Front dimension Ø 40 mm						
Metal silver	Plastic red	Metal	C	**45-2530.2920.000**	2	0.052 kg
Mushroom-head pushbutton actuator, Maintain, Front dimension Ø 40 mm						
Metal silver	Plastic yellow	Metal	C	**45-2530.2940.000**	2	0.052 kg
Mushroom-head pushbutton actuator, Momentary, Front dimension Ø 40 mm						
Metal silver	Plastic black	Metal	B	**45-2531.2910.000**	1	0.052 kg
Mushroom-head pushbutton actuator, Momentary, Front dimension Ø 40 mm						
Metal silver	Plastic red	Metal	B	**45-2531.2920.000**	1	0.052 kg
Mushroom-head pushbutton actuator, Momentary, Front dimension Ø 40 mm						
Metal silver	Plastic yellow	Metal	B	**45-2531.2940.000**	1	0.052 kg
Mushroom-head pushbutton actuator, Momentary, Front dimension Ø 40 mm						
Metal silver	Plastic green	Metal	B	**45-2531.2950.000**	1	0.052 kg
Mushroom-head pushbutton actuator, momentary/maintain, Front dimension Ø 40 mm						
Metal silver	Plastic black	Metal	B/C	**45-2532.2910.000**	3	0.052 kg

Front ring	Lens	Housing material	Switching action	Part No.	Wiring dia-gram	Weight
Mushroom-head pushbutton actuator, momentary/maintain, Front dimension Ø 40 mm						
Metal silver	Plastic red	Metal	B/C	**45-2532.2920.000**	3	0.052 kg
Mushroom-head pushbutton actuator, momentary/momentary, Front dimension Ø 40 mm						
Metal silver	Plastic black	Metal	B/B	**45-2533.2910.000**	4	0.052 kg
Mushroom-head pushbutton actuator, momentary/momentary, Front dimension Ø 40 mm						
Metal silver	Plastic red	Metal	B/B	**45-2533.2920.000**	4	0.052 kg

Switching action: B = Momentary, C = Maintain, B/B = Momentary/Momentary, B/C = Momentary/Maintain

		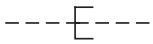	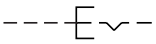
Wiring diagram 1	Wiring diagram 2	Wiring diagram 3	Wiring diagram 4

Mushroom-head pushbutton Ø 60 mm, IP66, IP67, IP69K

Product can differ from the current configuration.

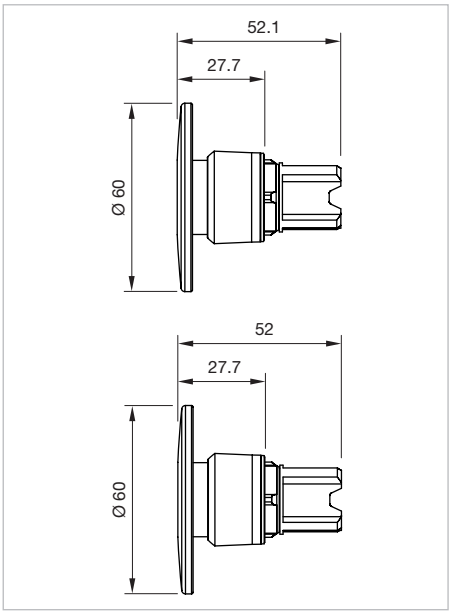

Dimensions [mm]

Equipment consisting of (schematic overview)

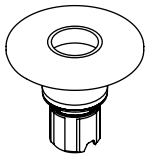

Actuator

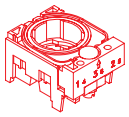

Holder *page 130*

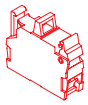

Switching element *page 132*

Each Part Number listed below includes all the black components shown in the 3D-drawing.

To obtain a complete unit, please select the red components from the pages shown.

Additional Information

- Mounting depth incl. front plate, see chapter «drawings»

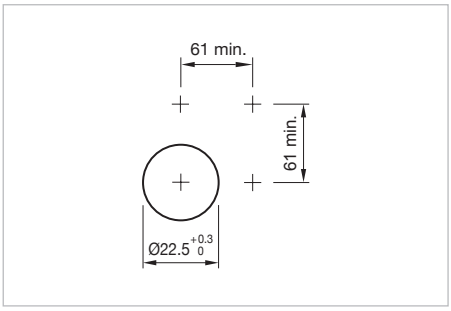

Mounting cut-outs [mm]

Front ring	Lens	Housing material	Switching action	Part No.	Wiring diagram	Weight
Mushroom-head pushbutton actuator, Maintain, Front dimension Ø 60 mm						
Plastic black	Plastic black	Plastic	C	**45-2530.1A10.000**	2	0.022 kg
Mushroom-head pushbutton actuator, Maintain, Front dimension Ø 60 mm						
Plastic black	Plastic red	Plastic	C	**45-2530.1A20.000**	2	0.020 kg
Mushroom-head pushbutton actuator, Momentary, Front dimension Ø 60 mm						
Plastic black	Plastic black	Plastic	B	**45-2531.1A10.000**	1	0.020 kg
Mushroom-head pushbutton actuator, Momentary, Front dimension Ø 60 mm						
Plastic black	Plastic red	Plastic	B	**45-2531.1A20.000**	1	0.020 kg

Front ring	Lens	Housing material	Switching action	Part No.	Wiring dia-gram	Weight
Mushroom-head pushbutton actuator, Momentary, Front dimension Ø 60 mm						
Plastic black	Plastic yellow	Plastic	B	**45-2531.1A40.000**	1	0.020 kg
Mushroom-head pushbutton actuator, Momentary, Front dimension Ø 60 mm						
Plastic black	Plastic green	Plastic	B	**45-2531.1A50.000**	1	0.020 kg
Mushroom-head pushbutton actuator, Maintain, Front dimension Ø 60 mm						
Metal silver	Plastic black	Metal	C	**45-2530.2A10.000**	2	0.052 kg
Mushroom-head pushbutton actuator, Maintain, Front dimension Ø 60 mm						
Metal silver	Plastic red	Metal	C	**45-2530.2A20.000**	2	0.052 kg
Mushroom-head pushbutton actuator, Momentary, Front dimension Ø 60 mm						
Metal silver	Plastic black	Metal	B	**45-2531.2A10.000**	1	0.052 kg
Mushroom-head pushbutton actuator, Momentary, Front dimension Ø 60 mm						
Metal silver	Plastic red	Metal	B	**45-2531.2A20.000**	1	0.052 kg
Mushroom-head pushbutton actuator, Momentary, Front dimension Ø 60 mm						
Metal silver	Plastic yellow	Metal	B	**45-2531.2A40.000**	1	0.052 kg
Mushroom-head pushbutton actuator, Momentary, Front dimension Ø 60 mm						
Metal silver	Plastic green	Metal	B	**45-2531.2A50.000**	1	0.052 kg

Switching action: B = Momentary, C = Maintain

Wiring diagram 1	Wiring diagram 2

Mushroom-head pushbutton Ø 30 mm, illuminated, IP66, IP67, IP69K

Product can differ from the current configuration.

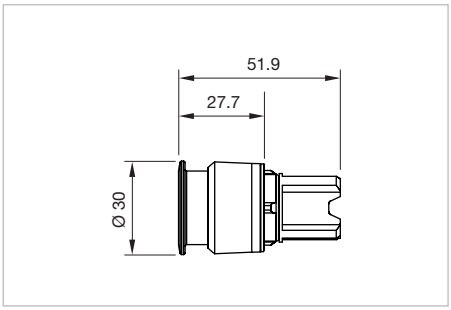

Dimensions [mm]

Additional Information

- Mounting depth incl. front plate, see chapter «drawings»

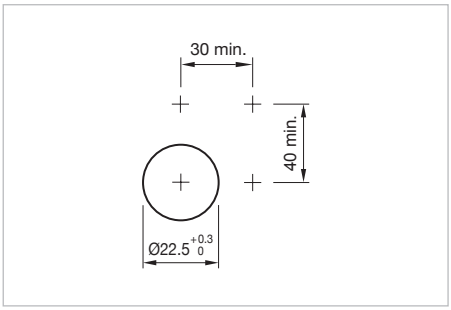

Mounting cut-outs [mm]

Equipment consisting of (schematic overview)

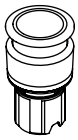

Actuator

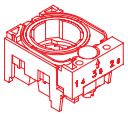

Holder *page 130*

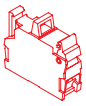

Switching element *page 132*

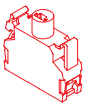

Illumination element *page 134*

Each Part Number listed below includes all the black components shown in the 3D-drawing.

To obtain a complete unit, please select the red components from the pages shown.

Front ring	Lens	Housing material	Switching action	Part No.	Wiring diagram	Weight
Mushroom-head pushbutton actuator, Maintain, Front dimension Ø 30 mm						
Plastic black	Plastic red transparent	Plastic	C	**45-2630.18E0.000**	1	0.027 kg
Mushroom-head pushbutton actuator, Maintain, Front dimension Ø 30 mm						
Plastic black	Plastic yellow transparent	Plastic	C	**45-2630.18G0.000**	1	0.027 kg
Mushroom-head pushbutton actuator, Maintain, Front dimension Ø 30 mm						
Plastic black	Plastic green transparent	Plastic	C	**45-2630.18H0.000**	1	0.027 kg
Mushroom-head pushbutton actuator, Maintain, Front dimension Ø 30 mm						
Plastic black	Plastic blue transparent	Plastic	C	**45-2630.18J0.000**	1	0.027 kg
Mushroom-head pushbutton actuator, Maintain, Front dimension Ø 30 mm						
Plastic black	Plastic colourless transparent	Plastic	C	**45-2630.18K0.000**	1	0.027 kg

Front ring	Lens	Housing material	Switching action	Part No.	Wiring dia-gram	Weight
Mushroom-head pushbutton actuator, Momentary, Front dimension Ø 30 mm						
Plastic black	Plastic red transparent	Plastic	B	**45-2631.18E0.000**	2	0.033 kg
Mushroom-head pushbutton actuator, Momentary, Front dimension Ø 30 mm						
Plastic black	Plastic yellow transparent	Plastic	B	**45-2631.18G0.000**	2	0.033 kg
Mushroom-head pushbutton actuator, Momentary, Front dimension Ø 30 mm						
Plastic black	Plastic green transparent	Plastic	B	**45-2631.18H0.000**	2	0.033 kg
Mushroom-head pushbutton actuator, Momentary, Front dimension Ø 30 mm						
Plastic black	Plastic blue transparent	Plastic	B	**45-2631.18J0.000**	2	0.033 kg
Mushroom-head pushbutton actuator, Momentary, Front dimension Ø 30 mm						
Plastic black	Plastic colourless transparent	Plastic	B	**45-2631.18K0.000**	2	0.033 kg
Mushroom-head pushbutton actuator, Momentary, Front dimension Ø 30 mm						
Plastic black	Plastic white transparent	Plastic	B	**45-2631.18N0.000**	2	0.033 kg
Mushroom-head pushbutton actuator, Maintain, Front dimension Ø 30 mm						
Metal sandgrey	Plastic red transparent	Plastic	C	**45-2630.38E0.000**	1	0.034 kg
Mushroom-head pushbutton actuator, Maintain, Front dimension Ø 30 mm						
Metal sandgrey	Plastic yellow transparent	Plastic	C	**45-2630.38G0.000**	1	0.034 kg
Mushroom-head pushbutton actuator, Momentary, Front dimension Ø 30 mm						
Metal sandgrey	Plastic yellow transparent	Plastic	B	**45-2631.38G0.000**	2	0.026 kg

45 Raised design

Front ring	Lens	Housing material	Switching action	Part No.	Wiring dia-gram	Weight
Mushroom-head pushbutton actuator, Momentary, Front dimension Ø 30 mm						
Metal sandgrey	Plastic red transparent	Plastic	B	**45-2631.38H0.000**	2	0.026 kg
Mushroom-head pushbutton actuator, Momentary, Front dimension Ø 30 mm						
Metal sandgrey	Plastic colourless transparent	Plastic	B	**45-2631.38K0.000**	2	0.026 kg
Mushroom-head pushbutton actuator, Momentary, Front dimension Ø 30 mm						
Metal sandgrey	Plastic white transparent	Plastic	B	**45-2631.38N0.000**	2	0.026 kg
Mushroom-head pushbutton actuator, Maintain, Front dimension Ø 30 mm						
Metal silver	Plastic amber transparency	Metal	C	**45-2630.28F0.000**	1	0.052 kg
Mushroom-head pushbutton actuator, Maintain, Front dimension Ø 30 mm						
Metal silver	Plastic red transparent	Metal	C	**45-2630.28E0.000**	1	0.052 kg
Mushroom-head pushbutton actuator, Maintain, Front dimension Ø 30 mm						
Metal silver	Plastic yellow transparent	Metal	C	**45-2630.28G0.000**	1	0.052 kg
Mushroom-head pushbutton actuator, Maintain, Front dimension Ø 30 mm						
Metal silver	Plastic green transparent	Metal	C	**45-2630.28H0.000**	1	0.052 kg
Mushroom-head pushbutton actuator, Maintain, Front dimension Ø 30 mm						
Metal silver	Plastic blue transparent	Metal	C	**45-2630.28J0.000**	1	0.052 kg
Mushroom-head pushbutton actuator, Maintain, Front dimension Ø 30 mm						
Metal silver	Plastic colourless transparent	Metal	C	**45-2630.28K0.000**	1	0.052 kg

Front ring	Lens	Housing material	Switching action	Part No.	Wiring dia-gram	Weight
Mushroom-head pushbutton actuator, Momentary, Front dimension Ø 30 mm						
Metal silver	Plastic yellow transparent	Metal	B	**45-2631.28G0.000**	2	0.041 kg
Mushroom-head pushbutton actuator, Momentary, Front dimension Ø 30 mm						
Metal silver	Plastic green transparent	Metal	B	**45-2631.28H0.000**	2	0.041 kg
Mushroom-head pushbutton actuator, Momentary, Front dimension Ø 30 mm						
Metal silver	Plastic white transparent	Metal	B	**45-2631.28N0.000**	2	0.041 kg

Switching action: B = Momentary, C = Maintain

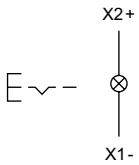 Wiring diagram 1	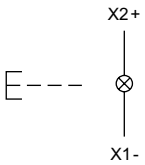 Wiring diagram 2

Mushroom-head pushbutton Ø 40 mm, illuminated, IP66, IP67, IP69K

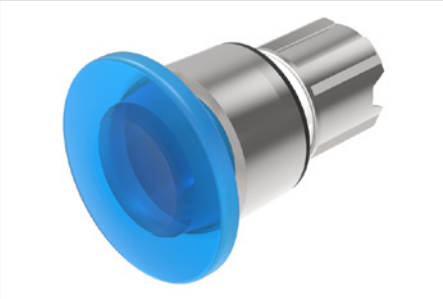

Product can differ from the current configuration.

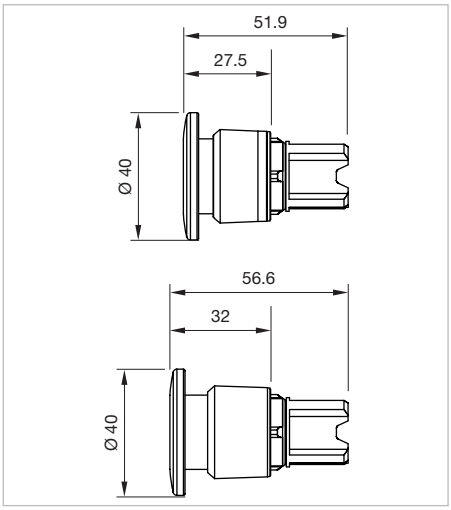

Dimensions [mm]

Equipment consisting of (schematic overview)

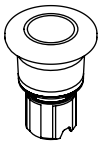

Actuator

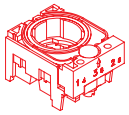

Holder *page 130*

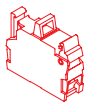

Switching element *page 132*

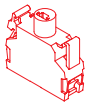

Illumination element *page 134*

Each Part Number listed below includes all the black components shown in the 3D-drawing.

To obtain a complete unit, please select the red components from the pages shown.

Additional Information

- Mounting depth incl. front plate, see chapter «drawings»

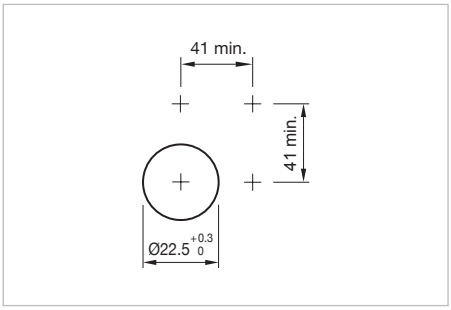

Mounting cut-outs [mm]

Front ring	Lens	Housing material	Switching action	Part No.	Wiring diagram	Weight
Mushroom-head pushbutton actuator, Maintain, Front dimension Ø 40 mm						
Plastic black	Plastic red transparent	Plastic	C	**45-2630.19E0.000**	1	0.028 kg
Mushroom-head pushbutton actuator, Maintain, Front dimension Ø 40 mm						
Plastic black	Plastic yellow transparent	Plastic	C	**45-2630.19G0.000**	1	0.028 kg
Mushroom-head pushbutton actuator, Maintain, Front dimension Ø 40 mm						
Plastic black	Plastic green transparent	Plastic	C	**45-2630.19H0.000**	1	0.028 kg
Mushroom-head pushbutton actuator, Maintain, Front dimension Ø 40 mm						
Plastic black	Plastic blue transparent	Plastic	C	**45-2630.19J0.000**	1	0.028 kg

Front ring	Lens	Housing material	Switching action	Part No.	Wiring dia-gram	Weight
Mushroom-head pushbutton actuator, Maintain, Front dimension Ø 40 mm						
Plastic black	Plastic colourless transparent	Plastic	C	**45-2630.19K0.000**	1	0.028 kg
Mushroom-head pushbutton actuator, Momentary, Front dimension Ø 40 mm						
Plastic black	Plastic yellow transparent	Plastic	B	**45-2631.19G0.000**	2	0.019 kg
Mushroom-head pushbutton actuator, Momentary, Front dimension Ø 40 mm						
Plastic black	Plastic green transparent	Plastic	B	**45-2631.19H0.000**	2	0.019 kg
Mushroom-head pushbutton actuator, Momentary, Front dimension Ø 40 mm						
Plastic black	Plastic colourless transparent	Plastic	B	**45-2631.19K0.000**	2	0.019 kg
Mushroom-head pushbutton actuator, Momentary, Front dimension Ø 40 mm						
Plastic black	Plastic white transparent	Plastic	B	**45-2631.19N0.000**	2	0.019 kg
Mushroom-head pushbutton actuator, Maintain, Front dimension Ø 40 mm						
Metal sandgrey	Plastic red transparent	Plastic	C	**45-2630.39E0.000**	1	0.035 kg
Mushroom-head pushbutton actuator, Maintain, Front dimension Ø 40 mm						
Metal sandgrey	Plastic yellow transparent	Plastic	C	**45-2630.39G0.000**	1	0.035 kg
Mushroom-head pushbutton actuator, Momentary, Front dimension Ø 40 mm						
Metal sandgrey	Plastic yellow transparent	Plastic	B	**45-2631.39G0.000**	2	0.028 kg
Mushroom-head pushbutton actuator, Momentary, Front dimension Ø 40 mm						
Metal sandgrey	Plastic green transparent	Plastic	B	**45-2631.39H0.000**	2	0.028 kg

45 Raised design

Front ring	Lens	Housing material	Switching action	Part No.	Wiring dia-gram	Weight
Mushroom-head pushbutton actuator, Momentary, Front dimension Ø 40 mm						
Metal sandgrey	Plastic colourless transparent	Plastic	B	**45-2631.39K0.000**	2	0.028 kg
Mushroom-head pushbutton actuator, Momentary, Front dimension Ø 40 mm						
Metal sandgrey	Plastic white transparent	Plastic	B	**45-2631.39N0.000**	2	0.028 kg
Mushroom-head pushbutton actuator, Maintain, Front dimension Ø 40 mm						
Metal silver	Plastic red transparent	Metal	C	**45-2630.29E0.000**	1	0.035 kg
Mushroom-head pushbutton actuator, Maintain, Front dimension Ø 40 mm						
Metal silver	Plastic amber transparency	Metal	C	**45-2630.29F0.000**	1	0.053 kg
Mushroom-head pushbutton actuator, Maintain, Front dimension Ø 40 mm						
Metal silver	Plastic yellow transparent	Metal	C	**45-2630.29G0.000**	1	0.053 kg
Mushroom-head pushbutton actuator, Maintain, Front dimension Ø 40 mm						
Metal silver	Plastic green transparent	Metal	C	**45-2630.29H0.000**	1	0.053 kg
Mushroom-head pushbutton actuator, Maintain, Front dimension Ø 40 mm						
Metal silver	Plastic blue transparent	Metal	C	**45-2630.29J0.000**	1	0.053 kg
Mushroom-head pushbutton actuator, Maintain, Front dimension Ø 40 mm						
Metal silver	Plastic colourless transparent	Metal	C	**45-2630.29K0.000**	1	0.053 kg
Mushroom-head pushbutton actuator, Momentary, Front dimension Ø 40 mm						
Metal silver	Plastic amber transparency	Metal	B	**45-2631.29F0.000**	2	0.042 kg

Front ring	Lens	Housing material	Switching action	Part No.	Wiring dia-gram	Weight
Mushroom-head pushbutton actuator, Momentary, Front dimension Ø 40 mm						
Metal silver	Plastic yellow transparent	Metal	B	**45-2631.29G0.000**	2	0.042 kg
Mushroom-head pushbutton actuator, Momentary, Front dimension Ø 40 mm						
Metal silver	Plastic green transparent	Metal	B	**45-2631.29H0.000**	2	0.042 kg
Mushroom-head pushbutton actuator, Momentary, Front dimension Ø 40 mm						
Metal silver	Plastic white transparent	Metal	B	**45-2631.29N0.000**	2	0.042 kg
Mushroom-head pushbutton actuator, momentary/maintain, Front dimension Ø 40 mm						
Metal silver	Plastic red transparent	Metal	B/C	**45-2632.29E0.000**	3	0.051 kg
Mushroom-head pushbutton actuator, momentary/maintain, Front dimension Ø 40 mm						
Metal silver	Plastic green transparent	Metal	B/C	**45-2632.29H0.000**	3	0.051 kg
Mushroom-head pushbutton actuator, momentary/momentary, Front dimension Ø 40 mm						
Metal silver	Plastic red transparent	Metal	B/B	**45-2633.29E0.000**	4	0.051 kg
Mushroom-head pushbutton actuator, momentary/momentary, Front dimension Ø 40 mm						
Metal silver	Plastic white transparent	Metal	B/B	**45-2633.29N0.000**	4	0.051 kg

Switching action: B = Momentary, C = Maintain, B/B = Momentary/Momentary, B/C = Momentary/Maintain

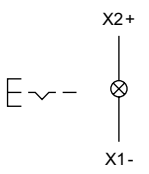

Wiring diagram 1

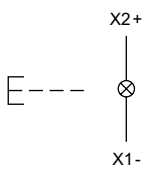

Wiring diagram 2

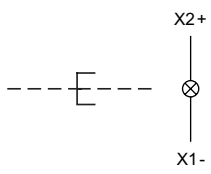

Wiring diagram 3

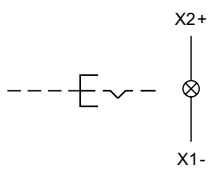

Wiring diagram 4

Mushroom-head pushbutton Ø 60 mm, illuminated, IP66, IP67, IP69K

Product can differ from the current configuration.

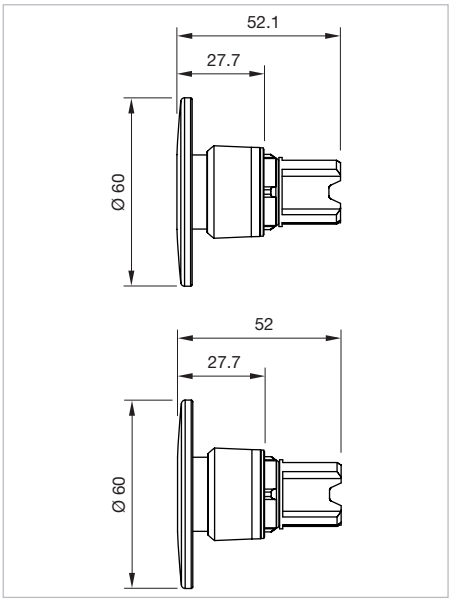

Dimensions [mm]

Equipment consisting of (schematic overview)

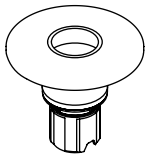

Actuator

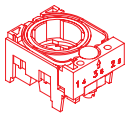

Holder *page 130*

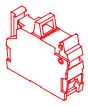

Switching element *page 132*

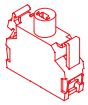

Illumination element *page 134*

Each Part Number listed below includes all the black components shown in the 3D-drawing.

To obtain a complete unit, please select the red components from the pages shown.

Additional Information

- Mounting depth incl. front plate, see chapter «drawings»

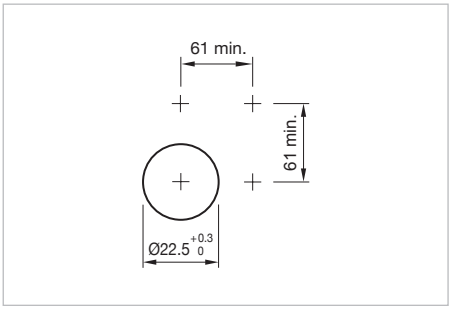

Mounting cut-outs [mm]

Front ring	Lens	Housing material	Switching action	Part No.	Wiring diagram	Weight
Mushroom-head pushbutton actuator, Maintain, Front dimension Ø 60 mm						
Metal silver	Plastic red transparent	Metal	C	**45-2630.2AE0.000**	1	0.057 kg
Mushroom-head pushbutton actuator, Maintain, Front dimension Ø 60 mm						
Metal silver	Plastic yellow transparent	Metal	C	**45-2630.2AG0.000**	1	0.057 kg
Mushroom-head pushbutton actuator, Maintain, Front dimension Ø 60 mm						
Metal silver	Plastic green transparent	Metal	C	**45-2630.2AH0.000**	1	0.057 kg

Front ring	Lens	Housing material	Switching action	Part No.	Wiring dia-gram	Weight
Mushroom-head pushbutton actuator, Maintain, Front dimension Ø 60 mm						
Metal silver	Plastic blue transparent	Metal	C	**45-2630.2AJ0.000**	1	0.057 kg
Mushroom-head pushbutton actuator, Maintain, Front dimension Ø 60 mm						
Metal silver	Plastic colourless transparent	Metal	C	**45-2630.2AK0.000**	1	0.057 kg
Mushroom-head pushbutton actuator, Momentary, Front dimension Ø 60 mm						
Metal silver	Plastic amber transparency	Metal	B	**45-2631.2AF0.000**	2	0.045 kg
Mushroom-head pushbutton actuator, Momentary, Front dimension Ø 60 mm						
Metal silver	Plastic yellow transparent	Metal	B	**45-2631.2AG0.000**	2	0.045 kg
Mushroom-head pushbutton actuator, Momentary, Front dimension Ø 60 mm						
Metal silver	Plastic green transparent	Metal	B	**45-2631.2AH0.000**	2	0.045 kg
Mushroom-head pushbutton actuator, Momentary, Front dimension Ø 60 mm						
Metal silver	Plastic white transparent	Metal	B	**45-2631.2AN0.000**	2	0.045 kg

Switching action: B = Momentary, C = Maintain

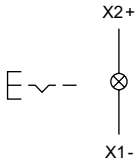 Wiring diagram 1	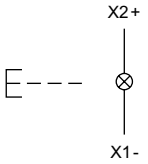 Wiring diagram 2

Keylock switch 2 positions, IP66, IP67, IP69K

Product can differ from the current configuration.

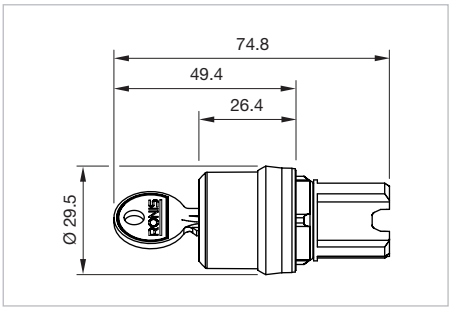

Dimensions [mm]

Equipment consisting of (schematic overview)

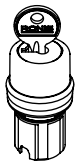

Actuator

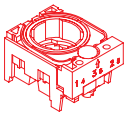

Holder *page 130*

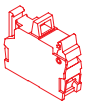

Switching element *page 132*

Each Part Number listed below includes all the black components shown in the 3D-drawing.

To obtain a complete unit, please select the red components from the pages shown.

Additional Information

- Mounting depth incl. front plate, see chapter «drawings»
- The standard lock: RONIS, T254
- Two keys are supplied with each key lock switch

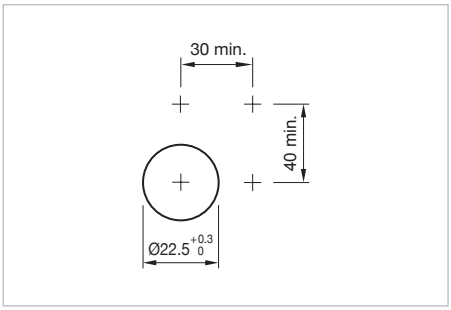

Mounting cut-outs [mm]

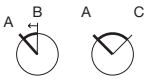

Switching positions (A = Rest, B = Momentary, C = Maintained)

Front ring	Housing material	Switching action	Switching angle	Key remove	Part No.	Wiring diagram	Weight
Keylock switch actuator 2 positions, Front dimension Ø 29.45 mm							
Plastic black	Plastic	A - B	B = 45°	A	**45-290K.1000.116**	1	0.046 kg
		A - C	C = 90°	A	**45-290J.1000.111**	2	0.046 kg
		A - C	C = 90°	A + C	**45-290H.1000.111**	2	0.046 kg
		A - C	C = 90°	A	**45-2925.1000.111**	2	0.046 kg
Keylock switch actuator 2 positions, Front dimension Ø 29.45 mm							
Metal sandgrey	Plastic	A - B	B = 45°	A	**45-290K.3000.116**	1	0.061 kg
		A - C	C = 90°	A	**45-290J.3000.111**	2	0.061 kg
		A - C	C = 90°	A + C	**45-290H.3000.111**	2	0.061 kg
		A - C	C = 90°	A	**45-2925.3000.111**	2	0.061 kg

Front ring	Housing material	Switching action	Switching angle	Key remove	Part No.	Wiring dia-gram	Weight
Keylock switch actuator 2 positions, Front dimension Ø 29.45 mm							
Metal silver	Metal	A - B	B = 45°	A	**45-290K.2000.116**	1	0.080 kg
		A - C	C = 90°	A	**45-290J.2000.111**	2	0.080 kg
		A - C	C = 90°	A + C	**45-290H.2000.111**	2	0.080 kg
		A - C	C = 90°	A	**45-2925.2000.111**	2	0.080 kg

Switching action: A = Rest, B = Momentary, C = Maintain

Wiring diagram 1	Wiring diagram 2

Keylock switch 3 positions, IP66, IP67, IP69K

Product can differ from the current configuration.

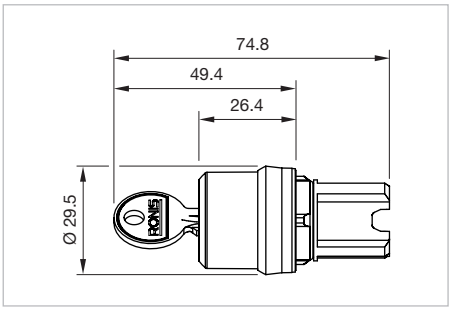

Dimensions [mm]

Equipment consisting of (schematic overview)

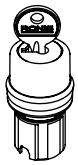

Actuator

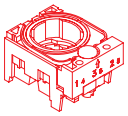

Holder *page 130*

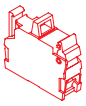

Switching element *page 132*

Each Part Number listed below includes all the black components shown in the 3D-drawing.

To obtain a complete unit, please select the red components from the pages shown.

Additional Information

- Mounting depth incl. front plate, see chapter «drawings»
- The standard lock: RONIS, T254
- Two keys are supplied with each key lock switch

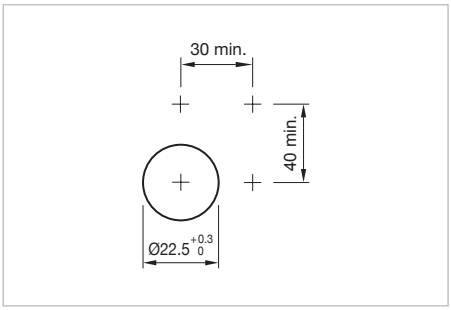

Mounting cut-outs [mm]

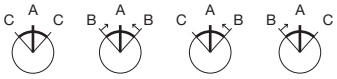

Switching positions (A = Rest, B = Momentary, C = Maintained)

Front ring	Switching action	Switching angle	Key remove	Part No.	Wiring diagram	Weight
Keylock switch actuator 3 positions, Front dimension Ø 29.45 mm						
Plastic black	C - A - C	C = 45°	A	**45-2924.1000.113**	1	0.060 kg
		C = 45°	C + A + C	**45-290F.1000.113**	1	0.060 kg
		C = 45°	C - -	**45-290D.1000.113**	1	0.060 kg
		C = 45°	- - C	**45-2917.1000.113**	1	0.060 kg
		C = 45°	C + C	**45-290C.1000.113**	1	0.060 kg
		C = 45°	C + A	**45-290G.1000.113**	1	0.060 kg
	B - A - B	B = 45°	A	**45-290Z.1000.113**	2	0.060 kg
	C - A - B	C = 45°, B = 45°	A	**45-2922.1000.113**	3	0.060 kg
		C = 45°, B = 45°	C	**45-290A.1000.113**	3	0.060 kg
		C = 45°, B = 45°	C + A	**45-290E.1000.113**	3	0.060 kg
	B - A - C	B = 45°, C = 45°	A	**45-2911.1000.113**	4	0.060 kg
		B = 45°, C = 45°	C	**45-290W.1000.113**	4	0.060 kg
		B = 45°, C = 45°	A + C	**45-2910.1000.113**	4	0.060 kg

Front ring	Switching action	Switching angle	Key remove	Part No.	Wiring dia-gram	Weight
Keylock switch actuator 3 positions, Front dimension Ø 29.45 mm						
Metal sandgrey	C - A - C	C = 45°	A	**45-2924.3000.113**	1	0.061 kg
		C = 45°	C + A + C	**45-290F.3000.113**	1	0.061 kg
		C = 45°	C - -	**45-290D.3000.113**	1	0.061 kg
		C = 45°	- - C	**45-2917.3000.113**	1	0.061 kg
		C = 45°	C + C	**45-290C.3000.113**	1	0.061 kg
		C = 45°	C + A	**45-290G.3000.113**	1	0.061 kg
	B - A - B	B = 45°	A	**45-290Z.3000.113**	2	0.061 kg
	C - A - B	C = 45°, B = 45°	A	**45-2922.3000.113**	3	0.061 kg
	B - A - C	B = 45°, C = 45°	A	**45-2911.3000.113**	4	0.061 kg
Keylock switch actuator 3 positions, Front dimension Ø 29.45 mm						
Metal silver	C - A - C	C = 45°	A	**45-2924.2000.113**	1	0.080 kg
		C = 45°	C + A + C	**45-290F.2000.113**	1	0.080 kg
		C = 45°	C - -	**45-290D.2000.113**	1	0.080 kg
		C = 45°	- - C	**45-2917.2000.113**	1	0.080 kg
		C = 45°	C + C	**45-290C.2000.113**	1	0.080 kg
		C = 45°	C + A	**45-290G.2000.113**	1	0.080 kg
	B - A - B	B = 45°	A	**45-290Z.2000.113**	2	0.080 kg
	C - A - B	C = 45°, B = 45°	A	**45-2922.2000.113**	3	0.080 kg
		C = 45°, B = 45°	C	**45-290A.2000.113**	3	0.080 kg
		C = 45°, B = 45°	C + A	**45-290E.2000.113**	3	0.080 kg
	B - A - C	B = 45°, C = 45°	A	**45-2911.2000.113**	4	0.080 kg
		B = 45°, C = 45°	A + C	**45-2910.2000.113**	4	0.080 kg

Switching action: A = Rest, B = Momentary, C = Maintain

Wiring diagram 1	Wiring diagram 2	Wiring diagram 3	Wiring diagram 4

Selector switch actuator 2 positions round lever, IP66, IP67, IP69K

Product can differ from the current configuration.

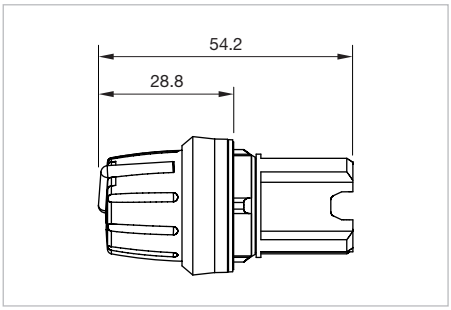

Dimensions [mm]

Additional Information

- Mounting depth incl. front plate, see chapter «drawings»

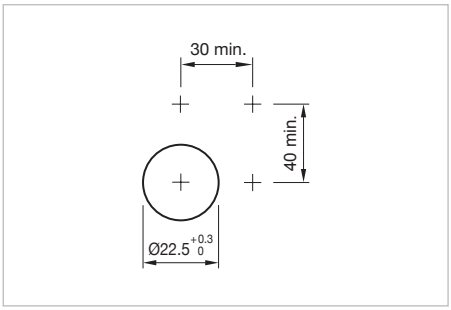

Mounting cut-outs [mm]

Equipment consisting of (schematic overview)

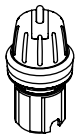

Actuator

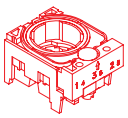

Holder *page 130*

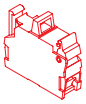

Switching element *page 132*

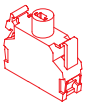

Illumination element *page 134*

Each Part Number listed below includes all the black components shown in the 3D-drawing.

To obtain a complete unit, please select the red components from the pages shown.

A C

Switching positions (A = Rest, B = Momentary, C = Maintained)

Lever	Front ring	Housing material	Switching action	Switching angle	Part No.	Wiring diagram	Weight
Selector switch actuator 2 positions, round lever, Front dimension Ø 29.45 mm							
Plastic red	Plastic black	Plastic	A - C	C = 90°	**45-2828.1E20.001**	1	0.023 kg
Selector switch actuator 2 positions, round lever, Front dimension Ø 29.45 mm							
Plastic white	Plastic black	Plastic	A - C	C = 90°	**45-2828.1E90.001**	1	0.023 kg
Selector switch actuator 2 positions, round lever, Front dimension Ø 29.45 mm							
Plastic red	Metal sandgrey	Plastic	A - C	C = 90°	**45-2828.3E20.001**	1	0.023 kg
Selector switch actuator 2 positions, round lever, Front dimension Ø 29.45 mm							
Plastic white	Metal sandgrey	Plastic	A - C	C = 90°	**45-2828.3E90.001**	1	0.023 kg

Switching action: A = Rest, C = Maintain

Wiring diagram 1

Selector switch actuator 2 positions short lever, IP66, IP67, IP69K

Product can differ from the current configuration.

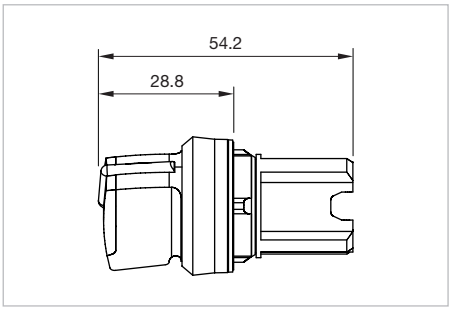

Dimensions [mm]

Additional Information

- Mounting depth incl. front plate, see chapter «drawings»
- External diameter of the short lever 32.3 mm

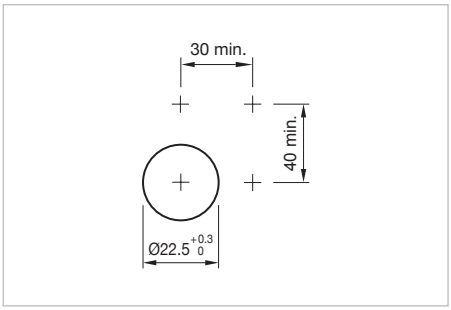

Mounting cut-outs [mm]

Equipment consisting of (schematic overview)

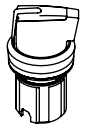

Actuator

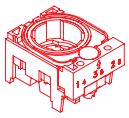

Holder *page 130*

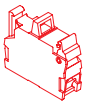

Switching element *page 132*

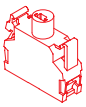

Illumination element *page 134*

Each Part Number listed below includes all the black components shown in the 3D-drawing.

To obtain a complete unit, please select the red components from the pages shown.

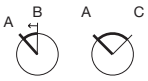

Switching positions (A = Rest, B = Momentary, C = Maintained)

Lever	Front ring	Housing material	Switching action	Switching angle	Part No.	Wiring diagram	Weight
Selector switch actuator 2 positions, short lever, Front dimension Ø 29.45 mm							
Plastic red	Plastic black	Plastic	A - B	B = 45°	**45-2844.1C20.006**	1	0.022 kg
Selector switch actuator 2 positions, short lever, Front dimension Ø 29.45 mm							
Plastic yellow	Plastic black	Plastic	A - B	B = 45°	**45-2844.1C40.006**	1	0.022 kg
Selector switch actuator 2 positions, short lever, Front dimension Ø 29.45 mm							
Plastic green	Plastic black	Plastic	A - B	B = 45°	**45-2844.1C50.006**	1	0.022 kg
Selector switch actuator 2 positions, short lever, Front dimension Ø 29.45 mm							
Plastic blue	Plastic black	Plastic	A - B	B = 45°	**45-2844.1C60.006**	1	0.022 kg

Lever	Front ring	Housing material	Switching action	Switching angle	Part No.	Wiring dia-gram	Weight
Selector switch actuator 2 positions, short lever, Front dimension Ø 29.45 mm							
Plastic white	Plastic black	Plastic	A - B	B = 45°	**45-2844.1C90.006**	1	0.022 kg
Selector switch actuator 2 positions, short lever, Front dimension Ø 29.45 mm							
Plastic red	Metal sandgrey	Plastic	A - B	B = 45°	**45-2844.3C20.006**	1	0.029 kg
Selector switch actuator 2 positions, short lever, Front dimension Ø 29.45 mm							
Plastic yellow	Metal sandgrey	Plastic	A - B	B = 45°	**45-2844.3C40.006**	1	0.029 kg
Selector switch actuator 2 positions, short lever, Front dimension Ø 29.45 mm							
Plastic green	Metal sandgrey	Plastic	A - B	B = 45°	**45-2844.3C50.006**	1	0.029 kg
Selector switch actuator 2 positions, short lever, Front dimension Ø 29.45 mm							
Plastic blue	Metal sandgrey	Plastic	A - B	B = 45°	**45-2844.3C60.006**	1	0.029 kg
Selector switch actuator 2 positions, short lever, Front dimension Ø 29.45 mm							
Plastic white	Metal sandgrey	Plastic	A - B	B = 45°	**45-2844.3C90.006**	1	0.029 kg
Selector switch actuator 2 positions, short lever, Front dimension Ø 29.45 mm							
Plastic red	Metal silver	Metal	A - B	B = 45°	**45-2844.2C20.006**	1	0.044 kg
Selector switch actuator 2 positions, short lever, Front dimension Ø 29.45 mm							
Plastic yellow	Metal silver	Metal	A - B	B = 45°	**45-2844.2C40.006**	1	0.044 kg
Selector switch actuator 2 positions, short lever, Front dimension Ø 29.45 mm							
Plastic green	Metal silver	Metal	A - B	B = 45°	**45-2844.2C50.006**	1	0.044 kg

45 Raised design

Lever	Front ring	Housing material	Switching action	Switching angle	Part No.	Wiring dia-gram	Weight
Selector switch actuator 2 positions, short lever, Front dimension Ø 29.45 mm							
Plastic blue	Metal silver	Metal	A - B	B = 45°	**45-2844.2C60.006**	1	0.044 kg
Selector switch actuator 2 positions, short lever, Front dimension Ø 29.45 mm							
Plastic white	Metal silver	Metal	A - B	B = 45°	**45-2844.2C90.006**	1	0.044 kg
Selector switch actuator 2 positions, short lever, Front dimension Ø 29.45 mm							
Plastic red	Plastic black	Plastic	A - C	C = 90°	**45-2828.1C20.001**	2	0.022 kg
Selector switch actuator 2 positions, short lever, Front dimension Ø 29.45 mm							
Plastic yellow	Plastic black	Plastic	A - C	C = 90°	**45-2828.1C40.001**	2	0.022 kg
Selector switch actuator 2 positions, short lever, Front dimension Ø 29.45 mm							
Plastic green	Plastic black	Plastic	A - C	C = 90°	**45-2828.1C50.001**	2	0.022 kg
Selector switch actuator 2 positions, short lever, Front dimension Ø 29.45 mm							
Plastic blue	Plastic black	Plastic	A - C	C = 90°	**45-2828.1C60.001**	2	0.022 kg
Selector switch actuator 2 positions, short lever, Front dimension Ø 29.45 mm							
Plastic white	Plastic black	Plastic	A - C	C = 90°	**45-2828.1C90.001**	2	0.022 kg
Selector switch actuator 2 positions, short lever, Front dimension Ø 29.45 mm							
Plastic red	Metal sandgrey	Plastic	A - C	C = 90°	**45-2828.3C20.001**	2	0.029 kg
Selector switch actuator 2 positions, short lever, Front dimension Ø 29.45 mm							
Plastic yellow	Metal sandgrey	Plastic	A - C	C = 90°	**45-2828.3C40.001**	2	0.029 kg

Lever	Front ring	Housing material	Switching action	Switching angle	Part No.	Wiring dia-gram	Weight
Selector switch actuator 2 positions, short lever, Front dimension Ø 29.45 mm							
Plastic green	Metal sandgrey	Plastic	A - C	C = 90°	**45-2828.3C50.001**	2	0.029 kg
Selector switch actuator 2 positions, short lever, Front dimension Ø 29.45 mm							
Plastic blue	Metal sandgrey	Plastic	A - C	C = 90°	**45-2828.3C60.001**	2	0.029 kg
Selector switch actuator 2 positions, short lever, Front dimension Ø 29.45 mm							
Plastic white	Metal sandgrey	Plastic	A - C	C = 90°	**45-2828.3C90.001**	2	0.029 kg
Selector switch actuator 2 positions, short lever, Front dimension Ø 29.45 mm							
Plastic red	Metal silver	Metal	A - C	C = 90°	**45-2828.2C20.001**	2	0.044 kg
Selector switch actuator 2 positions, short lever, Front dimension Ø 29.45 mm							
Plastic ambergris	Metal silver	Metal	A - C	C = 90°	**45-2828.2C30.001**	2	0.044 kg
Selector switch actuator 2 positions, short lever, Front dimension Ø 29.45 mm							
Plastic green	Metal silver	Metal	A - C	C = 90°	**45-2828.2C50.001**	2	0.044 kg
Selector switch actuator 2 positions, short lever, Front dimension Ø 29.45 mm							
Plastic white	Metal silver	Metal	A - C	C = 90°	**45-2828.2C90.001**	2	0.044 kg

Switching action: A = Rest, B = Momentary, C = Maintain

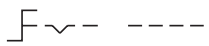	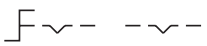
Wiring diagram 1	Wiring diagram 2

Selector switch 2 positions long lever, IP66, IP67, IP69K

Product can differ from the current configuration.

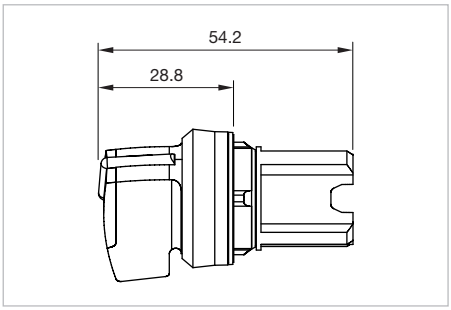

Dimensions [mm]

Additional Information

- Mounting depth incl. front plate, see chapter «drawings»
- External diameter of the long lever 44.8 mm

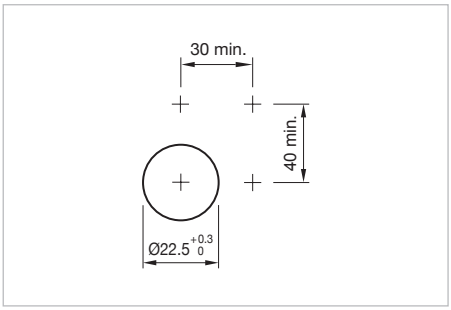

Mounting cut-outs [mm]

Equipment consisting of (schematic overview)

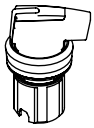

Actuator

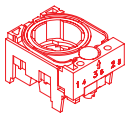

Holder *page 130*

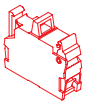

Switching element *page 132*

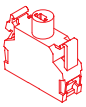

Illumination element *page 134*

Each Part Number listed below includes all the black components shown in the 3D-drawing.

To obtain a complete unit, please select the red components from the pages shown.

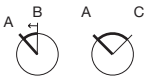

Switching positions (A = Rest, B = Momentary, C = Maintained)

Lever	Front ring	Housing material	Switching action	Switching angle	Part No.	Wiring diagram	Weight
Selector switch actuator 2 positions, long lever, Front dimension Ø 29.45 mm							
Plastic red	Plastic black	Plastic	A - C	C = 90°	**45-2828.1D20.001**	1	0.022 kg
Selector switch actuator 2 positions, long lever, Front dimension Ø 29.45 mm							
Plastic white	Plastic black	Plastic	A - C	C = 90°	**45-2828.1D90.001**	1	0.022 kg
Selector switch actuator 2 positions, long lever, Front dimension Ø 29.45 mm							
Plastic red	Metal sandgrey	Plastic	A - C	C = 90°	**45-2828.3D20.001**	1	0.029 kg
Selector switch actuator 2 positions, long lever, Front dimension Ø 29.45 mm							
Plastic white	Metal sandgrey	Plastic	A - C	C = 90°	**45-2828.3D90.001**	1	0.029 kg

Lever	Front ring	Housing material	Switching action	Switching angle	Part No.	Wiring dia-gram	Weight
Selector switch actuator 2 positions, long lever, Front dimension Ø 29.45 mm							
Plastic red	Metal silver	Metal	A - C	C = 90°	**45-2828.2D20.001**	1	0.022 kg
Selector switch actuator 2 positions, long lever, Front dimension Ø 29.45 mm							
Plastic yellow	Metal silver	Metal	A - C	C = 90°	**45-2828.2D40.001**	1	0.052 kg
Selector switch actuator 2 positions, long lever, Front dimension Ø 29.45 mm							
Plastic green	Metal silver	Metal	A - C	C = 90°	**45-2828.2D50.001**	1	0.052 kg
Selector switch actuator 2 positions, long lever, Front dimension Ø 29.45 mm							
Plastic blue	Metal silver	Metal	A - C	C = 90°	**45-2828.2D60.001**	1	0.052 kg
Selector switch actuator 2 positions, long lever, Front dimension Ø 29.45 mm							
Plastic white	Metal silver	Metal	A - C	C = 90°	**45-2828.2D90.001**	1	0.052 kg
Selector switch actuator 2 positions, long lever, Front dimension Ø 29.45 mm							
Plastic yellow	Metal silver	Metal	A - B	B = 45°	**45-2844.2D40.006**	2	0.044 kg
Selector switch actuator 2 positions, long lever, Front dimension Ø 29.45 mm							
Plastic green	Metal silver	Metal	A - B	B = 45°	**45-2844.2D50.006**	2	0.044 kg
Selector switch actuator 2 positions, long lever, Front dimension Ø 29.45 mm							
Plastic blue	Metal silver	Metal	A - B	B = 45°	**45-2844.2D60.006**	2	0.044 kg
Selector switch actuator 2 positions, long lever, Front dimension Ø 29.45 mm							
Plastic white	Metal silver	Metal	A - B	B = 45°	**45-2844.2D90.006**	2	0.044 kg

Switching action: A = Rest, B = Momentary, C = Maintain

45 Raised design

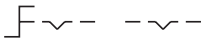

Wiring diagram 1

Selector switch 3 positions short lever, IP66, IP67, IP69K

Equipment consisting of (schematic overview)

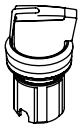

Actuator

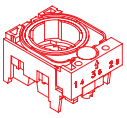

Holder *page 130*

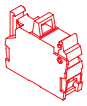

Switching element *page 132*

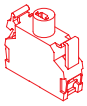

Illumination element *page 134*

Each Part Number listed below includes all the black components shown in the 3D-drawing.

To obtain a complete unit, please select the red components from the pages shown.

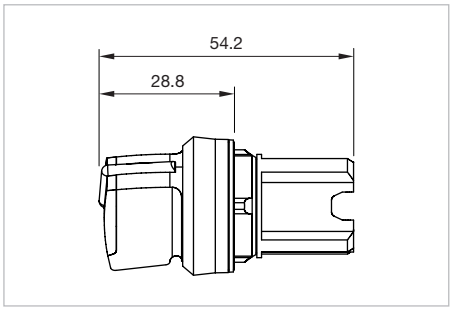

Dimensions [mm]

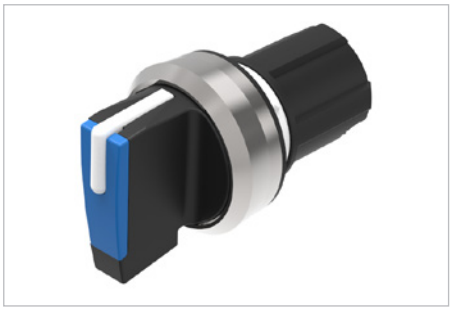

Product can differ from the current configuration.

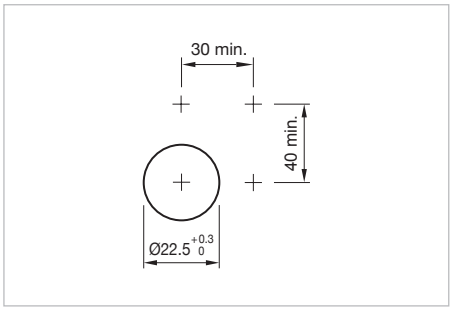

Mounting cut-outs [mm]

Additional Information

- Mounting depth incl. front plate, see chapter «drawings»
- External diameter of the short lever 32.3 mm

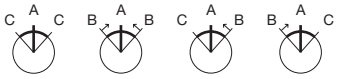

Switching positions (A = Rest, B = Momentary, C = Maintained)

Lever	Front ring	Housing material	Switching action	Switching angle	Part No.	Wiring diagram	Weight
Selector switch actuator 3 positions, short lever, Front dimension Ø 29.45 mm							
Plastic red	Plastic black	Plastic	C - A - C	C = 45°	**45-2819.1C20.003**	1	0.022 kg
Selector switch actuator 3 positions, short lever, Front dimension Ø 29.45 mm							
Plastic yellow	Plastic black	Plastic	C - A - C	C = 45°	**45-2819.1C40.003**	1	0.022 kg
Selector switch actuator 3 positions, short lever, Front dimension Ø 29.45 mm							
Plastic green	Plastic black	Plastic	C - A - C	C = 45°	**45-2819.1C50.003**	1	0.022 kg
Selector switch actuator 3 positions, short lever, Front dimension Ø 29.45 mm							
Plastic blue	Plastic black	Plastic	C - A - C	C = 45°	**45-2819.1C60.003**	1	0.022 kg

45 Raised design

Lever	Front ring	Housing material	Switching action	Switching angle	Part No.	Wiring dia-gram	Weight
Selector switch actuator 3 positions, short lever, Front dimension Ø 29.45 mm							
Plastic white	Plastic black	Plastic	C - A - C	C = 45°	**45-2819.1C90.003**	1	0.022 kg
Selector switch actuator 3 positions, short lever, Front dimension Ø 29.45 mm							
Plastic red	Plastic black	Plastic	B - A - B	B = 45°	**45-280S.1C20.003**	2	0.022 kg
Selector switch actuator 3 positions, short lever, Front dimension Ø 29.45 mm							
Plastic yellow	Plastic black	Plastic	B - A - B	B = 45°	**45-280S.1C40.003**	2	0.022 kg
Selector switch actuator 3 positions, short lever, Front dimension Ø 29.45 mm							
Plastic green	Plastic black	Plastic	B - A - B	B = 45°	**45-280S.1C50.003**	2	0.022 kg
Selector switch actuator 3 positions, short lever, Front dimension Ø 29.45 mm							
Plastic blue	Plastic black	Plastic	B - A - B	B = 45°	**45-280S.1C60.003**	2	0.022 kg
Selector switch actuator 3 positions, short lever, Front dimension Ø 29.45 mm							
Plastic white	Plastic black	Plastic	B - A - B	B = 45°	**45-280S.1C90.003**	2	0.022 kg
Selector switch actuator 3 positions, short lever, Front dimension Ø 29.45 mm							
Plastic red	Plastic black	Plastic	C - A - B	C = 45°, B = 45°	**45-2816.1C20.003**	3	0.022 kg
Selector switch actuator 3 positions, short lever, Front dimension Ø 29.45 mm							
Plastic yellow	Plastic black	Plastic	C - A - B	C = 45°, B = 45°	**45-2816.1C40.003**	3	0.022 kg
Selector switch actuator 3 positions, short lever, Front dimension Ø 29.45 mm							
Plastic green	Plastic black	Plastic	C - A - B	C = 45°, B = 45°	**45-2816.1C50.003**	3	0.022 kg
Selector switch actuator 3 positions, short lever, Front dimension Ø 29.45 mm							
Plastic blue	Plastic black	Plastic	C - A - B	C = 45°, B = 45°	**45-2816.1C60.003**	3	0.022 kg

Lever	Front ring	Housing material	Switching action	Switching angle	Part No.	Wiring dia-gram	Weight
Selector switch actuator 3 positions, short lever, Front dimension Ø 29.45 mm							
Plastic white	Plastic black	Plastic	C - A - B	C = 45°, B = 45°	**45-2816.1C90.003**	3	0.022 kg
Selector switch actuator 3 positions, short lever, Front dimension Ø 29.45 mm							
Plastic red	Plastic black	Plastic	B - A - C	B = 45°, C = 45°	**45-280X.1C20.003**	4	0.022 kg
Selector switch actuator 3 positions, short lever, Front dimension Ø 29.45 mm							
Plastic yellow	Plastic black	Plastic	B - A - C	B = 45°, C = 45°	**45-280X.1C40.003**	4	0.022 kg
Selector switch actuator 3 positions, short lever, Front dimension Ø 29.45 mm							
Plastic green	Plastic black	Plastic	B - A - C	B = 45°, C = 45°	**45-280X.1C50.003**	4	0.022 kg
Selector switch actuator 3 positions, short lever, Front dimension Ø 29.45 mm							
Plastic blue	Plastic black	Plastic	B - A - C	B = 45°, C = 45°	**45-280X.1C60.003**	4	0.022 kg
Selector switch actuator 3 positions, short lever, Front dimension Ø 29.45 mm							
Plastic white	Plastic black	Plastic	B - A - C	B = 45°, C = 45°	**45-280X.1C90.003**	4	0.022 kg
Selector switch actuator 3 positions, short lever, Front dimension Ø 29.45 mm							
Plastic red	Metal sandgrey	Plastic	C - A - C	C = 45°	**45-2819.3C20.003**	1	0.022 kg
Selector switch actuator 3 positions, short lever, Front dimension Ø 29.45 mm							
Plastic yellow	Metal sandgrey	Plastic	C - A - C	C = 45°	**45-2819.3C40.003**	1	0.022 kg
Selector switch actuator 3 positions, short lever, Front dimension Ø 29.45 mm							
Plastic green	Metal sandgrey	Plastic	C - A - C	C = 45°	**45-2819.3C50.003**	1	0.022 kg
Selector switch actuator 3 positions, short lever, Front dimension Ø 29.45 mm							
Plastic blue	Metal sandgrey	Plastic	C - A - C	C = 45°	**45-2819.3C60.003**	1	0.022 kg

45 Raised design

Lever	Front ring	Housing material	Switching action	Switching angle	Part No.	Wiring diagram	Weight
Selector switch actuator 3 positions, short lever, Front dimension Ø 29.45 mm							
Plastic white	Metal sandgrey	Plastic	C - A - C	C = 45°	**45-2819.3C90.003**	1	0.022 kg
Selector switch actuator 3 positions, short lever, Front dimension Ø 29.45 mm							
Plastic red	Metal sandgrey	Plastic	B - A - B	B = 45°	**45-280S.3C20.003**	2	0.022 kg
Selector switch actuator 3 positions, short lever, Front dimension Ø 29.45 mm							
Plastic yellow	Metal sandgrey	Plastic	B - A - B	B = 45°	**45-280S.3C40.003**	2	0.022 kg
Selector switch actuator 3 positions, short lever, Front dimension Ø 29.45 mm							
Plastic green	Metal sandgrey	Plastic	B - A - B	B = 45°	**45-280S.3C50.003**	2	0.022 kg
Selector switch actuator 3 positions, short lever, Front dimension Ø 29.45 mm							
Plastic blue	Metal sandgrey	Plastic	B - A - B	B = 45°	**45-280S.3C60.003**	2	0.022 kg
Selector switch actuator 3 positions, short lever, Front dimension Ø 29.45 mm							
Plastic white	Metal sandgrey	Plastic	B - A - B	B = 45°	**45-280S.3C90.003**	2	0.022 kg
Selector switch actuator 3 positions, short lever, Front dimension Ø 29.45 mm							
Plastic red	Metal sandgrey	Plastic	C - A - B	C = 45°, B = 45°	**45-2816.3C20.003**	3	0.022 kg
Selector switch actuator 3 positions, short lever, Front dimension Ø 29.45 mm							
Plastic yellow	Metal sandgrey	Plastic	C - A - B	C = 45°, B = 45°	**45-2816.3C40.003**	3	0.022 kg
Selector switch actuator 3 positions, short lever, Front dimension Ø 29.45 mm							
Plastic green	Metal sandgrey	Plastic	C - A - B	C = 45°, B = 45°	**45-2816.3C50.003**	3	0.022 kg
Selector switch actuator 3 positions, short lever, Front dimension Ø 29.45 mm							
Plastic blue	Metal sandgrey	Plastic	C - A - B	C = 45°, B = 45°	**45-2816.3C60.003**	3	0.022 kg

Lever	Front ring	Housing material	Switching action	Switching angle	Part No.	Wiring dia-gram	Weight
Selector switch actuator 3 positions, short lever, Front dimension Ø 29.45 mm							
Plastic white	Metal sandgrey	Plastic	C - A - B	C = 45°, B = 45°	**45-2816.3C90.003**	3	0.022 kg
Selector switch actuator 3 positions, short lever, Front dimension Ø 29.45 mm							
Plastic red	Metal sandgrey	Plastic	B - A - C	B = 45°, C = 45°	**45-280X.3C20.003**	4	0.022 kg
Selector switch actuator 3 positions, short lever, Front dimension Ø 29.45 mm							
Plastic yellow	Metal sandgrey	Plastic	B - A - C	B = 45°, C = 45°	**45-280X.3C40.003**	4	0.022 kg
Selector switch actuator 3 positions, short lever, Front dimension Ø 29.45 mm							
Plastic green	Metal sandgrey	Plastic	B - A - C	B = 45°, C = 45°	**45-280X.3C50.003**	4	0.022 kg
Selector switch actuator 3 positions, short lever, Front dimension Ø 29.45 mm							
Plastic blue	Metal sandgrey	Plastic	B - A - C	B = 45°, C = 45°	**45-280X.3C60.003**	4	0.022 kg
Selector switch actuator 3 positions, short lever, Front dimension Ø 29.45 mm							
Plastic white	Metal sandgrey	Plastic	B - A - C	B = 45°, C = 45°	**45-280X.3C90.003**	4	0.022 kg
Selector switch actuator 3 positions, short lever, Front dimension Ø 29.45 mm							
Plastic red	Metal silver	Metal	C - A - C	C = 45°	**45-2819.2C20.003**	1	0.022 kg
Selector switch actuator 3 positions, short lever, Front dimension Ø 29.45 mm							
Plastic yellow	Metal silver	Metal	C - A - C	C = 45°	**45-2819.2C40.003**	1	0.022 kg
Selector switch actuator 3 positions, short lever, Front dimension Ø 29.45 mm							
Plastic green	Metal silver	Metal	C - A - C	C = 45°	**45-2819.2C50.003**	1	0.022 kg
Selector switch actuator 3 positions, short lever, Front dimension Ø 29.45 mm							
Plastic white	Metal silver	Metal	C - A - C	C = 45°	**45-2819.2C90.003**	1	0.022 kg

45 Raised design

Lever	Front ring	Housing material	Switching action	Switching angle	Part No.	Wiring dia-gram	Weight
Selector switch actuator 3 positions, short lever, Front dimension Ø 29.45 mm							
Plastic red	Metal silver	Metal	B - A - B	B = 45°	**45-280S.2C20.003**	2	0.022 kg
Selector switch actuator 3 positions, short lever, Front dimension Ø 29.45 mm							
Plastic ambergris	Metal silver	Metal	B - A - B	B = 45°	**45-280S.2C30.003**	2	0.022 kg
Selector switch actuator 3 positions, short lever, Front dimension Ø 29.45 mm							
Plastic yellow	Metal silver	Metal	B - A - B	B = 45°	**45-280S.2C40.003**	2	0.022 kg
Selector switch actuator 3 positions, short lever, Front dimension Ø 29.45 mm							
Plastic green	Metal silver	Metal	B - A - B	B = 45°	**45-280S.2C50.003**	2	0.022 kg
Selector switch actuator 3 positions, short lever, Front dimension Ø 29.45 mm							
Plastic blue	Metal silver	Metal	B - A - B	B = 45°	**45-280S.2C60.003**	2	0.022 kg
Selector switch actuator 3 positions, short lever, Front dimension Ø 29.45 mm							
Plastic white	Metal silver	Metal	B - A - B	B = 45°	**45-280S.2C90.003**	2	0.022 kg
Selector switch actuator 3 positions, short lever, Front dimension Ø 29.45 mm							
Plastic red	Metal silver	Metal	C - A - B	C = 45°, B = 45°	**45-2816.2C20.003**	3	0.022 kg
Selector switch actuator 3 positions, short lever, Front dimension Ø 29.45 mm							
Plastic green	Metal silver	Metal	C - A - B	C = 45°, B = 45°	**45-2816.2C50.003**	3	0.022 kg
Selector switch actuator 3 positions, short lever, Front dimension Ø 29.45 mm							
Plastic white	Metal silver	Metal	C - A - B	C = 45°, B = 45°	**45-2816.2C90.003**	3	0.022 kg
			B - A - C	B = 45°, C = 45°	**45-280X.2C90.003**	4	0.022 kg

Switching action: A = Rest, B = Momentary, C = Maintain

Wiring diagram 1	Wiring diagram 2	Wiring diagram 3	Wiring diagram 4

Selector switch 3 positions long lever, IP66, IP67, IP69K

Product can differ from the current configuration.

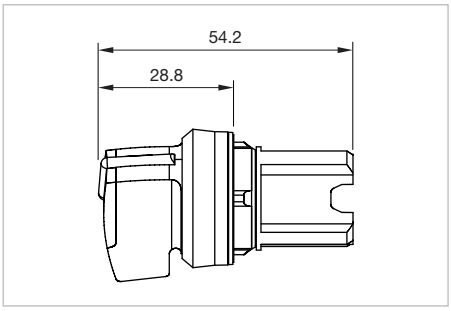

Dimensions [mm]

Additional Information

- Mounting depth incl. front plate, see chapter «drawings»
- External diameter of the long lever 44.8 mm

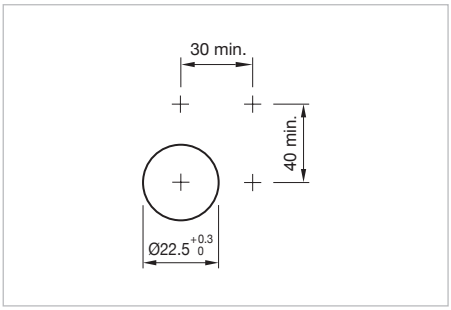

Mounting cut-outs [mm]

Equipment consisting of (schematic overview)

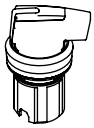

Actuator

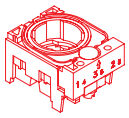

Holder *page 130*

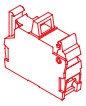

Switching element *page 132*

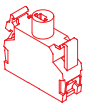

Illumination element *page 134*

Each Part Number listed below includes all the black components shown in the 3D-drawing.

To obtain a complete unit, please select the red components from the pages shown.

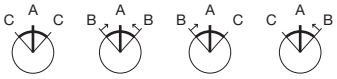

Switching positions (A = Rest, B = Momentary, C = Maintained)

Lever	Front ring	Housing material	Switching action	Switching angle	Part No.	Wiring diagram	Weight
Selector switch actuator 3 positions, long lever, Front dimension Ø 29.45 mm							
Plastic red	Metal silver	Metal	C - A - C	C = 45°	**45-2819.2D20.003**	1	0.022 kg
Selector switch actuator 3 positions, long lever, Front dimension Ø 29.45 mm							
Plastic green	Metal silver	Metal	C - A - C	C = 45°	**45-2819.2D50.003**	1	0.022 kg
Selector switch actuator 3 positions, long lever, Front dimension Ø 29.45 mm							
Plastic white	Metal silver	Metal	C - A - C	C = 45°	**45-2819.2D90.003**	1	0.022 kg
Selector switch actuator 3 positions, long lever, Front dimension Ø 29.45 mm							
Plastic red	Metal silver	Metal	B - A - B	B = 45°	**45-280S.2D20.003**	2	0.022 kg

Lever	Front ring	Housing material	Switching action	Switching angle	Part No.	Wiring dia-gram	Weight
Selector switch actuator 3 positions, long lever, Front dimension Ø 29.45 mm							
Plastic green	Metal silver	Metal	B - A - B	B = 45°	**45-280S.2D50.003**	2	0.022 kg
Selector switch actuator 3 positions, long lever, Front dimension Ø 29.45 mm							
Plastic white	Metal silver	Metal	B - A - B	B = 45°	**45-280S.2D90.003**	2	0.022 kg
Selector switch actuator 3 positions, long lever, Front dimension Ø 29.45 mm							
Plastic red	Metal silver	Metal	C - A - B	C = 45°, B = 45°	**45-2816.2D20.003**	3	0.022 kg
Selector switch actuator 3 positions, long lever, Front dimension Ø 29.45 mm							
Plastic white	Metal silver	Metal	C - A - B	C = 45°, B = 45°	**45-2816.2D90.003**	3	0.022 kg
Selector switch actuator 3 positions, long lever, Front dimension Ø 29.45 mm							
Plastic red	Metal silver	Metal	B - A - C	B = 45°, C = 45°	**45-280X.2D20.003**	4	0.022 kg
Selector switch actuator 3 positions, long lever, Front dimension Ø 29.45 mm							
Plastic white	Metal silver	Metal	B - A - C	B = 45°, C = 45°	**45-280X.2D90.003**	4	0.022 kg

Switching action: A = Rest, B = Momentary, C = Maintain

Wiring diagram 1	Wiring diagram 2	Wiring diagram 3	Wiring diagram 4

Selector switch actuator 4 positions round lever, IP66, IP67, IP69K

Product can differ from the current configuration.

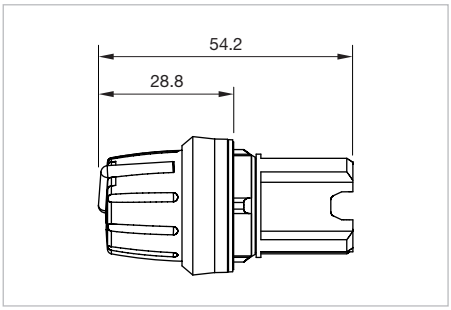

Dimensions [mm]

Additional Information

- Use only with holder for 4 elements
- Mounting depth incl. front plate, see chapter «drawings»

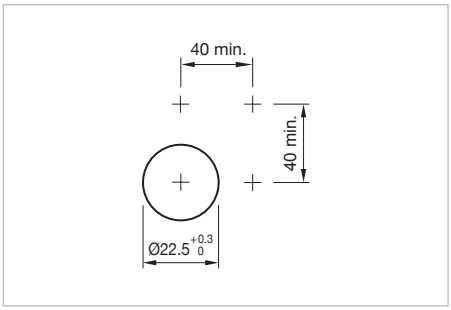

Mounting cut-outs [mm]

Equipment consisting of (schematic overview)

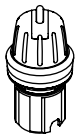

Actuator

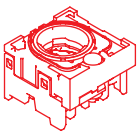

Holder *page 130*

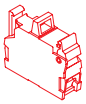

Switching element *page 132*

Each Part Number listed below includes all the black components shown in the 3D-drawing.

To obtain a complete unit, please select the red components from the pages shown.

Lever	Front ring	Housing material	Switching action	Switching angle	Part No.	Wiring diagram	Weight
Selector switch actuator 4 positions, round lever, Front dimension Ø 29.45 mm							
Plastic white	Plastic black	Plastic	C	C = 90°	**45-2845.1E90.002**	1	0.023 kg
Selector switch actuator 4 positions, round lever, Front dimension Ø 29.45 mm							
Plastic white	Metal sandgrey	Plastic	C	C = 90°	**45-2845.3E90.002**	1	0.023 kg
Selector switch actuator 4 positions, round lever, Front dimension Ø 29.45 mm							
Plastic white	Metal silver	Metal	C	C = 90°	**45-2845.2E90.002**	1	0.023 kg

Switching action: C = Maintain

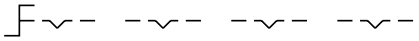

Wiring diagram 1

Potentiometer, IP66, IP67, IP69K

Equipment consisting of (schematic overview)

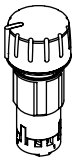

Actuator

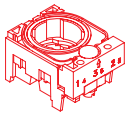

Holder *page 130*

Each Part Number listed below includes all the black components shown in the 3D-drawing.

To obtain a complete unit, please select the red components from the pages shown.

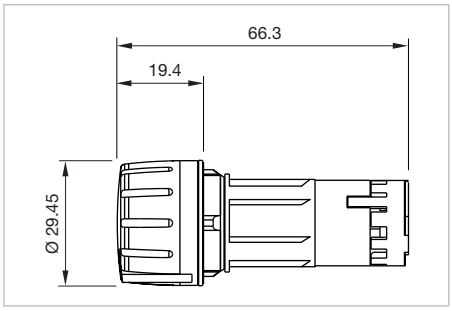

Dimensions [mm]

Product can differ from the current configuration.

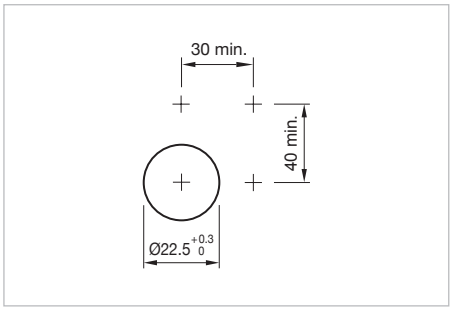

Mounting cut-outs [mm]

Additional Information

- Power 0.5 W
- Slewing range 275° ±2°
- Mounting depth incl. front plate, see chapter «drawings»

Product attribute	Front ring	Housing material	Part No.	Compo-nent layout	Wiring dia-gram	Weight
Potentiometer, Front dimension Ø 29.45 mm						
Resistor 1 kOhm / linear, series E3	Plastic black	Plastic	**45-2P03.1E10.000**	1	1	0.03 kg
Resistor 4.7 kOhm / linear, series E3	Plastic black	Plastic	**45-2P04.1E10.000**	1	1	0.03 kg
Resistor 10 kOhm / linear, series E3	Plastic black	Plastic	**45-2P02.1E10.000**	1	1	0.03 kg
Resistor 47 kOhm / linear, series E3	Plastic black	Plastic	**45-2P06.1E10.000**	1	1	0.03 kg
Resistor 100 kOhm / linear, series E3	Plastic black	Plastic	**45-2P01.1E10.000**	1	1	0.03 kg
Resistor 470 kOhm / linear, series E3	Plastic black	Plastic	**45-2P05.1E10.000**	1	1	0.03 kg
Potentiometer, Front dimension Ø 29.45 mm						
Resistor 1 kOhm / linear, series E3	Metal silver	Metal	**45-2P03.2E10.000**	1	1	0.03 kg
Resistor 4.7 kOhm / linear, series E3	Metal silver	Metal	**45-2P04.2E10.000**	1	1	0.03 kg
Resistor 10 kOhm / linear, series E3	Metal silver	Metal	**45-2P02.2E10.000**	1	1	0.03 kg
Resistor 47 kOhm / linear, series E3	Metal silver	Metal	**45-2P06.2E10.000**	1	1	0.03 kg
Resistor 100 kOhm / linear, series E3	Metal silver	Metal	**45-2P01.2E10.000**	1	1	0.03 kg
Resistor 470 kOhm / linear, series E3	Metal silver	Metal	**45-2P05.2E10.000**	1	1	0.03 kg

The component layouts you will find from Page 144

45 Raised design

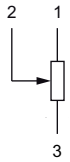

Wiring diagram 1

Toggle stick, IP 65, IP 67

Equipment consisting of (schematic overview)

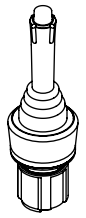

Actuator

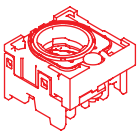

Holder *page 130*

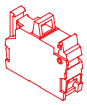

Switching element *page 132*

Each Part Number listed below includes all the black components shown in the 3D-drawing.

To obtain a complete unit, please select the red components from the pages shown.

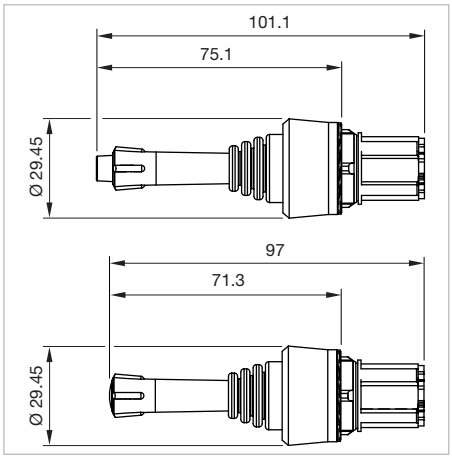

Dimensions [mm]

Product can differ from the current configuration.

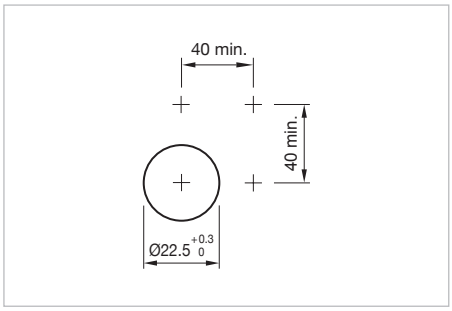

Mounting cut-outs [mm]

Additional Information

- Use only with holder for 4 elements
- Mounting depth incl. front plate, see chapter «drawings»

Product attribute	Front ring	Housing material	Switching action	Part No.	Wiring diagram	Weight
Toggle stick, Front dimension Ø 29.45 mm						
2 positions (L-R), lockable	Plastic black	Plastic	B	**45-2F13.1010.000**	1	0.035 kg
2 positions (U-D), lockable	Plastic black	Plastic	B	**45-2F40.1010.000**	3	0.035 kg
4-positions, lockable	Plastic black	Plastic	B	**45-2F14.1010.000**	5	0.035 kg
Toggle stick, Front dimension Ø 29.45 mm						
2 positions (L-R), lockable	Metal sandgrey	Plastic	B	**45-2F13.3010.000**	1	0.042 kg
2 positions (U-D), lockable	Metal sandgrey	Plastic	B	**45-2F40.3010.000**	3	0.042 kg
4-positions, lockable	Metal sandgrey	Plastic	B	**45-2F14.3010.000**	5	0.042 kg
Toggle stick, Front dimension Ø 29.45 mm						
2 positions (L-R), lockable	Metal silver	Metal	B	**45-2F13.2010.000**	1	0.081 kg
2 positions (U-D), lockable	Metal silver	Metal	B	**45-2F40.2010.000**	3	0.081 kg
4-positions, lockable	Metal silver	Metal	B	**45-2F14.2010.000**	5	0.081 kg

45 Raised design

Product attribute	Front ring	Housing material	Switching action	Part No.	Wiring diagram	Weight
Toggle stick, Front dimension Ø 29.45 mm						
2 positions (L-R)	Plastic black	Plastic	B	**45-2F0T.1010.000**	1	0.035 kg
2 positions (U-D)	Plastic black	Plastic	B	**45-2F38.1010.000**	3	0.035 kg
4 positions	Plastic black	Plastic	B	**45-2F0V.1010.000**	5	0.035 kg
Toggle stick, Front dimension Ø 29.45 mm						
2 positions (L-R)	Metal sandgrey	Plastic	B	**45-2F0T.3010.000**	1	0.042 kg
2 positions (U-D)	Metal sandgrey	Plastic	B	**45-2F38.3010.000**	3	0.042 kg
4 positions	Metal sandgrey	Plastic	B	**45-2F0V.3010.000**	5	0.042 kg
Toggle stick, Front dimension Ø 29.45 mm						
2 positions (L-R)	Metal silver	Metal	B	**45-2F0T.2010.000**	1	0.081 kg
2 positions (U-D)	Metal silver	Metal	B	**45-2F38.2010.000**	3	0.081 kg
4 positions	Metal silver	Metal	B	**45-2F0V.2010.000**	5	0.081 kg

Switching action: B = Momentary

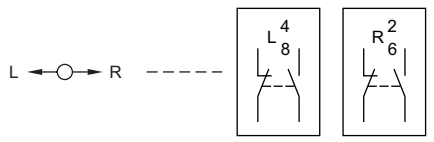

Wiring diagram 1

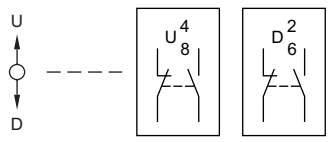

Wiring diagram 3

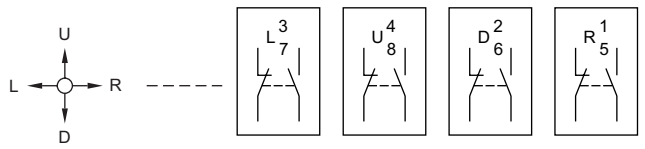

Wiring diagram 5

Toggle switches, IP66, IP67, IP69K

Equipment consisting of (schematic overview)

Actuator

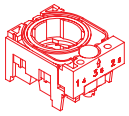

Holder *page 130*

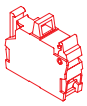

Switching element *page 132*

Each Part Number listed below includes all the black components shown in the 3D-drawing.

To obtain a complete unit, please select the red components from the pages shown.

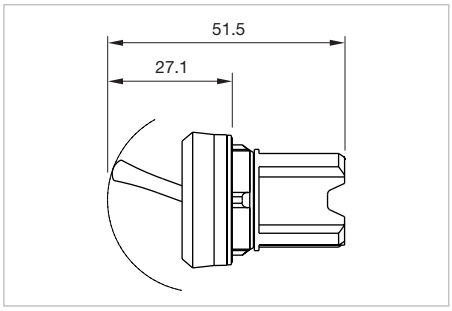

Dimensions [mm]

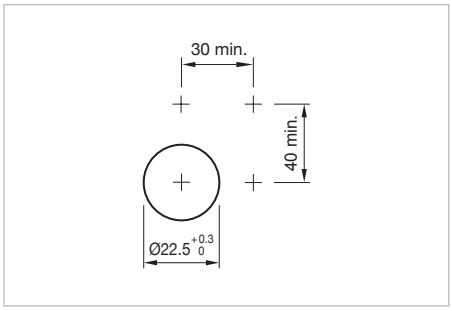

Mounting cut-outs [mm]

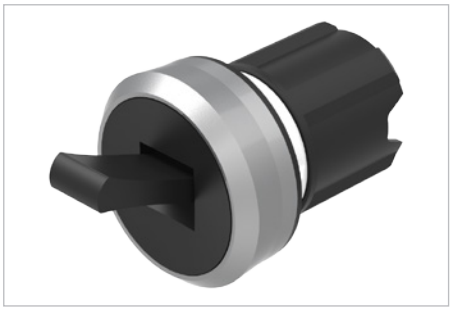

Product can differ from the current configuration.

Additional Information

- Mounting depth incl. front plate, see chapter «drawings»

Product attribute	Lever	Front ring	Switching action	Part No.	Wiring diagram	Weight
Toggle switch actuator, Front dimension Ø 29.45 mm						
reset from above	Plastic black	Plastic black	C	**45-2N42.1010.000**	1	0.015 kg
–	Plastic black	Plastic black	B	**45-2N39.1010.000**	2	0.015 kg
Toggle switch actuator, Front dimension Ø 29.45 mm						
reset from above	Plastic black	Metal sandgrey	C	**45-2N42.3010.000**	1	0.020 kg
–	Plastic black	Metal sandgrey	B	**45-2N39.3010.000**	2	0.020 kg
Toggle switch actuator, Front dimension Ø 29.45 mm						
reset from above	Plastic black	Metal silver	C	**45-2N42.2010.000**	1	0.038 kg
–	Plastic black	Metal silver	B	**45-2N39.2010.000**	2	0.038 kg

Switching action: B = Momentary, C = Maintain

Wiring diagram 1	Wiring diagram 2

Lens plastic round flat

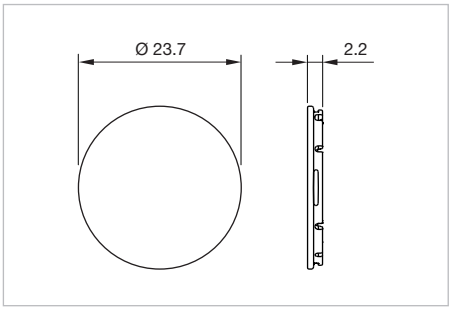

Dimensions [mm]

Dimension	Lens	Part No.	Weight
Lens			
Ø 23.7 mm	Plastic black	**45-553.0100**	0.001 kg
Lens			
Ø 23.7 mm	Plastic red	**45-553.0200**	0.001 kg
Lens			
Ø 23.7 mm	Plastic yellow	**45-553.0400**	0.001 kg
Lens			
Ø 23.7 mm	Plastic green	**45-553.0500**	0.001 kg
Lens			
Ø 23.7 mm	Plastic blue	**45-553.0600**	0.001 kg
Lens			
Ø 23.7 mm	Plastic white	**45-553.0900**	0.001 kg
Lens			
Ø 23.7 mm	Plastic red transparent	**45-553.0E00**	0.001 kg

Dimension	Lens	Part No.	Weight
Lens			
Ø 23.7 mm	Plastic amber transparent	**45-553.0F00**	0.001 kg
Lens			
Ø 23.7 mm	Plastic yellow transparent	**45-553.0G00**	0.001 kg
Lens			
Ø 23.7 mm	Plastic green transparent	**45-553.0H00**	0.001 kg
Lens			
Ø 23.7 mm	Plastic blue transparent	**45-553.0J00**	0.001 kg
Lens			
Ø 23.7 mm	Plastic white transparent	**45-553.0K00**	0.001 kg
Lens			
Ø 23.7 mm	Plastic colourless transparent	**45-553.0N00**	0.001 kg

Lens plastic round encreased

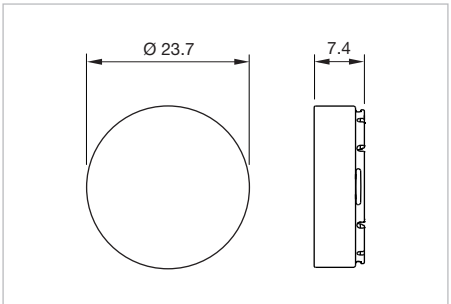

Dimensions [mm]

Dimension	Lens	Part No.	Weight
Lens			
Ø 23.7 mm	Plastic black	**45-552.0100**	0.002 kg

45

Dimension	Lens	Part No.	Weight
Lens			
Ø 23.7 mm	Plastic red	**45-552.0200**	0.002 kg
Lens			
Ø 23.7 mm	Plastic yellow	**45-552.0400**	0.002 kg
Lens			
Ø 23.7 mm	Plastic green	**45-552.0500**	0.002 kg
Lens			
Ø 23.7 mm	Plastic red transparent	**45-552.0E00**	0.002 kg
Lens			
Ø 23.7 mm	Plastic yellow transparent	**45-552.0G00**	0.002 kg
Lens			
Ø 23.7 mm	Plastic green transparent	**45-552.0H00**	0.002 kg
Lens			
Ø 23.7 mm	Plastic blue transparent	**45-552.0J00**	0.002 kg
Lens			
Ø 23.7 mm	Plastic colourless transparent	**45-552.0K00**	0.002 kg

Marking plate

Additional Information

- For pushbutton illuminated
- Markable, see «Marking»
- To change the text plate, the push cap is removed with a screwdriver and then snapped back

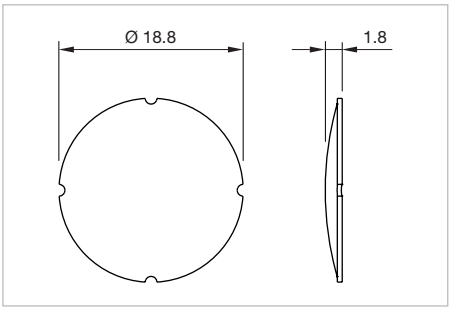

Dimensions [mm]

Marking plate illumination	Marking plate	Part No.	Weight
Marking plate			
illuminative	white translucent	**45-563.0K00**	0.001 kg

Legend plate

Additional Information

- Markable, see «Marking»

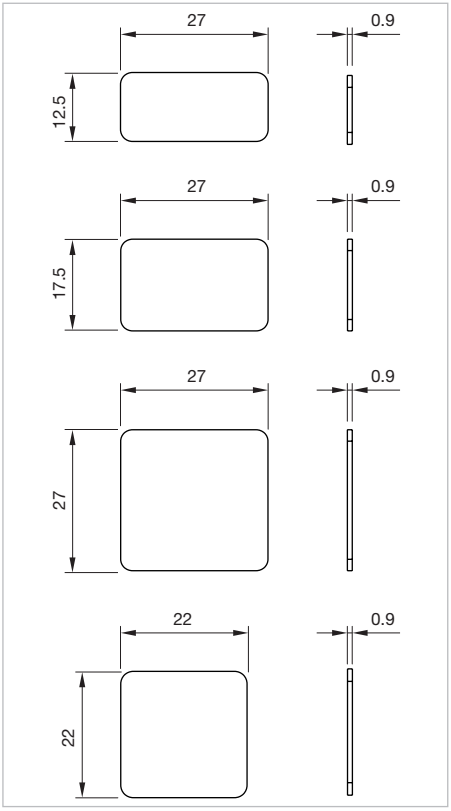

Dimensions [mm]

Product attribute	Dimension	Material	Colour	Part No.	Weight
Legend plate					
For sticking or snapping in place	27 x 12.5 mm	Plastic	black	**45-573.1102**	0.001 kg
For sticking or snapping in place	27 x 12.5 mm	Plastic	red	**45-573.1202**	0.001 kg
For sticking or snapping in place	27 x 12.5 mm	Plastic	silver	**45-573.1A02**	0.001 kg
Legend plate					
For sticking or snapping in place	27 x 17.5 mm	Plastic	black	**45-573.1103**	0.001 kg
For sticking or snapping in place	27 x 17.5 mm	Plastic	silver	**45-573.1A03**	0.001 kg
Legend plate					
For sticking or snapping in place	27 x 27 mm	Plastic	black	**45-573.1105**	0.001 kg
For sticking or snapping in place	27 x 27 mm	Plastic	silver	**45-573.1A05**	0.001 kg
Legend plate					
For sticking or snapping in place	22 x 22 mm	Plastic	silver	**45-573.1A04**	0.001 kg
For sticking	22 x 22 mm	Plastic	black	**45-573.1104**	0.001 kg

Emergency-stop legend

Additional Information

- Front panel thickness 3 mm max.

Product attribute	Dimension	Mounting cut-out	Marking	Colour	Part No.	Weight
Emergency-stop legend						
–	Ø 45 x 1 mm	Ø 22.5 mm	without marking	yellow	**45-50K.1407**	0.005 kg
Emergency-stop legend						
–	Ø 75 x 1 mm	Ø 22.5 mm	without marking	yellow	**45-50K.1408**	0.010 kg
Emergency-stop legend						
self-adhesive	Ø 75 x 1 mm	Ø 23 mm	without marking	yellow	**45-50J.1400**	0.004 kg
Emergency-stop legend						
self-adhesive	Ø 75 x 1 mm	Ø 23 mm	NOT - HALT	yellow	**45-50J.140Q**	0.004 kg
Emergency-stop legend						
self-adhesive	Ø 75 x 1 mm	Ø 23 mm	EMERGENCY STOP	yellow	**45-50J.140S**	0.004 kg
Emergency-stop legend						
self-adhesive	Ø 75 x 1 mm	Ø 23 mm	NOT - AUS	yellow	**45-50J.140P**	0.004 kg
Emergency-stop legend						
self-adhesive	Ø 75 x 1 mm	Ø 23 mm	ARRET D›URGENCE	yellow	**45-50J.140T**	0.004 kg
Emergency-stop legend						
self-adhesive	Ø 75 x 1 mm	Ø 23 mm	EMERGENZA	yellow	**45-50J.140V**	0.004 kg
Emergency-stop legend						
self-adhesive	Ø 75 x 1 mm	Ø 23 mm	NODSTOP	yellow	**45-50J.140W**	0.004 kg

Product attribute	Dimension	Mounting cut-out	Marking	Colour	Part No.	Weight
Emergency-stop legend						
self-adhesive	Ø 75 x 1 mm	Ø 23 mm	紧急停止	yellow	**45-50J.140X**	0.004 kg
Emergency-stop legend						
self-adhesive	Ø 75 x 1 mm	Ø 23 mm	NOT-HALT EMERGENCY STOP EMERGENZA EMERGENCIA	yellow	**45-50J.140Z**	0.004 kg
Emergency-stop legend						
self-adhesive	150 x 38 mm	Ø 23 mm	without marking	yellow	**45-561.1400**	0.004 kg
Emergency-stop legend						
self-adhesive	150 x 38 mm	Ø 23 mm	NOT - AUS	yellow	**45-561.140P**	0.004 kg
Emergency-stop legend						
self-adhesive	150 x 38 mm	Ø 23 mm	without marking	yellow	**45-562.1400**	0.004 kg

Legend plate for potentiometer

Dimension	Material	Colour	Part No.	Weight
Legend plate for potentiometer				
Ø 40 mm	Plastic	black	**45-538.1100**	0.001 kg

Legend support without legend

Additional Information

- For sticking or snapping in place

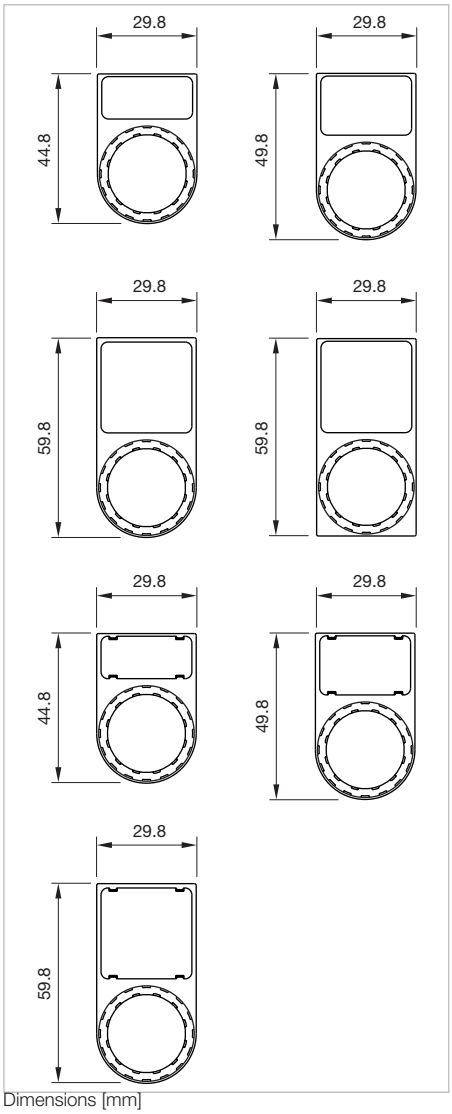

Dimensions [mm]

Product attribute	Material	Colour	Part No.	Weight
Legend support without legend				
for legend plate 27 x 12.5 mm	Plastic	black	**45-564.1102**	0.002 kg
Legend support without legend				
for legend plate 27 x 17.5 mm	Plastic	black	**45-567.1103**	0.002 kg
Legend support without legend				
for legend plate 27 x 27 mm	Plastic	black	**45-569.1105**	0.002 kg

Product attribute	Material	Colour	Part No.	Weight
Legend support without legend				
for legend plate 27 x 27 mm	Plastic	black	**45-570.1105**	0.002 kg
Legend support without legend				
for legend plate 27 x 12.5 mm	Plastic	black	**45-564.1110**	0.002 kg
Legend support without legend				
for legend plate 27 x 17.5 mm	Plastic	black	**45-567.1111**	0.002 kg
Legend support without legend				
for legend plate 27 x 27 mm	Plastic	black	**45-569.1112**	0.002 kg

Legend support without legend for toggle stick

Additional Information

- For sticking or snapping in place

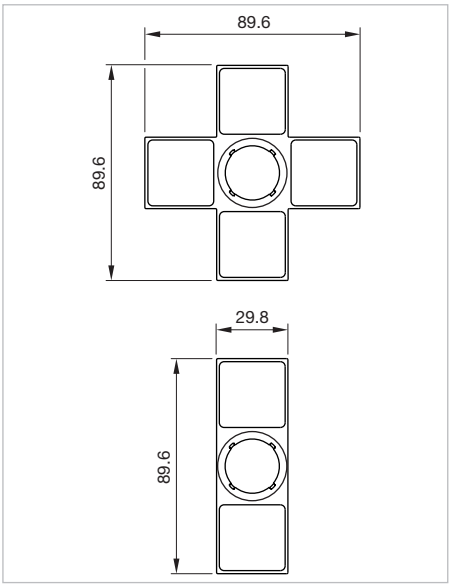

Dimensions [mm]

Product attribute	Material	Colour	Part No.	Weight
Legend support without legend for toggle stick				
for legend plate 27 x 27 mm	Plastic	black	**45-571.1105**	0.002 kg
Legend support without legend for toggle stick				
for legend plate 27 x 27 mm	Plastic	black	**45-572.1105**	0.002 kg

Single frame, IP66, IP67, IP69K

Additional Information

- For design square

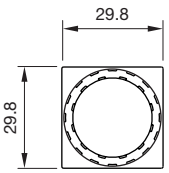

Dimensions [mm]

Dimension	Material	Colour	Part No.	Weight
Single frame for design square				
29.8 x 29.8 mm	Plastic	black	**45-558.0000**	0.001 kg

Protective cover, IP66, IP67

Additional Information

- Hinged, with means for sealing
- Please note that bigger minimum distances are necessary

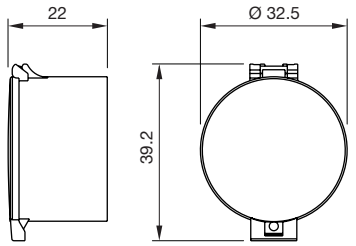

Dimensions [mm]

Material	Colour	Optics	Part No.	Weight
Protective cover				
Plastic	black	opaque	**45-555.1100**	0.012 kg
Protective cover				
Plastic	colourless	transparent	**45-555.1K00**	0.012 kg

Protective cap

Product attribute	Front protection	Material	Colour	Optics	Part No.	Weight
Protective cap for pushbutton						
for lens raised above bezel	IP66, IP67	Silicone	colourless	transparent	**45-544.1K00**	0.008 kg
for lens flush	IP66, IP67	Silicone	colourless	transparent	**45-545.1K00**	0.008 kg
Protective cap for twin pushbutton						
for lens raised above bezel	IP66, IP67	Silicone	colourless	transparent	**45-547.1K00**	0.011 kg
for lens flush	IP66, IP67	Silicone	colourless	transparent	**45-548.1K00**	0.011 kg
Protective cap for Emergency stop switch						
for lens raised above bezel	IP66, IP67	Silicone	colourless	transparent	**45-542.1K00**	0.015 kg
Protective cap for Mushroom-head pushbutton						
for Mushroom-head pushbutton Ø 40	IP66, IP67	Silicone	colourless	transparent	**45-543.1K00**	0.006 kg
Protective cap for selector switch						
for lever switch, short lever	IP66, IP67	Silicone	colourless	transparent	**45-546.1K00**	0.006 kg
Protective cap for keylock switch						
for keylock switch	IP66, IP67	Silicone	colourless	transparent	**45-50F.1100**	0.006 kg

Cover, IP66, IP67, IP69K

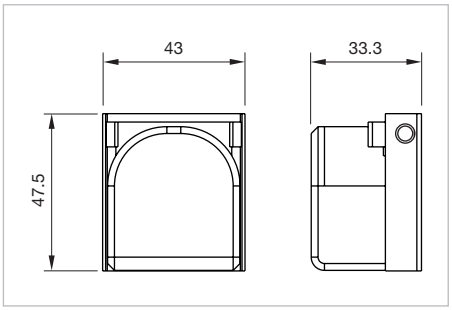

Dimensions [mm]

Product attribute	Material	Colour	Optics	Part No.	Weight
Cover for locking device					
For pushbuttons, selector switches with round or short lever	Metall/Kunststoff	silver/colourless	transparent	**45-529.2100**	0.043 kg

E-stop protective shroud

Additional Information

- The protection shroud is not suitable for a proper use of emergency-stop. It can obstruct a spontaneous operation of the emergency-stop

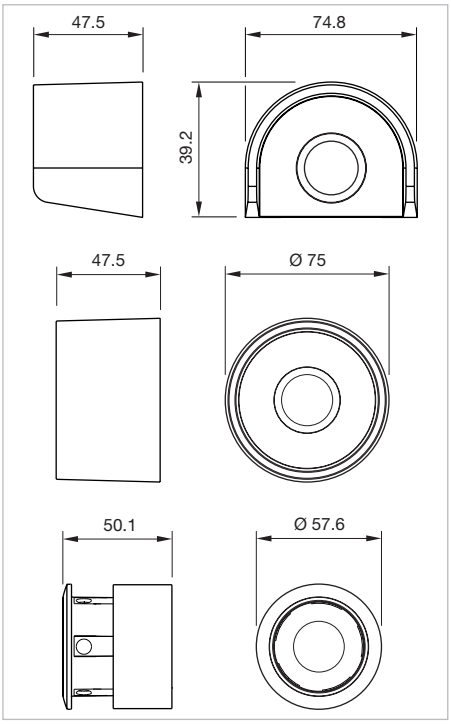

Dimensions [mm]

Product attribute	Material	Colour	Part No.	Weight
E-stop protective shroud				
non-illuminative	Plastic	yellow	**45-549.1400**	0.052 kg
E-stop protective shroud				
non-illuminative	Plastic	grey	**45-549.1800**	0.052 kg
E-stop protective shroud				
non-illuminative	Plastic	yellow	**45-550.1400**	0.044 kg
E-stop protective shroud				
for Emergency stop switch Ø 40 mm, for 5 padlocks	Metal	yellow	**45-539.2400**	0.162 kg
E-stop protective shroud				
for Emergency stop switch Ø 40 mm, for 5 padlocks	Metal	grey	**45-539.2800**	0.153 kg

Protective shroud, IP66, IP67, IP69K

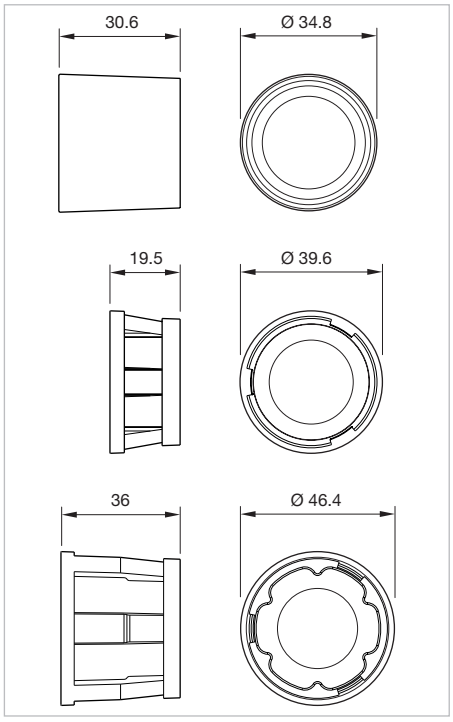

Dimensions [mm]

Product attribute	Material	Colour	Part No.	Weight
Protective shroud				
for pushbutton, selector switch	Plastic	black	**45-50N.1100**	0.010 kg
Protective shroud				
for pushbuttons	Metal	silver	**45-50Q.2100**	0.020 kg
Protective shroud				
for mushroom-head pushbutton Ø 40 mm	Metal	silver	**45-50P.0100**	0.020 kg

Sun collar

Product attribute	Material	Colour	Part No.	Weight
Sun collar				
for pushbutton illuminated	Plastic	black	**45-560.1100**	0.010 kg

Blind plug, IP66, IP67, IP69K

Additional Information

- Use with plastic or metal holder

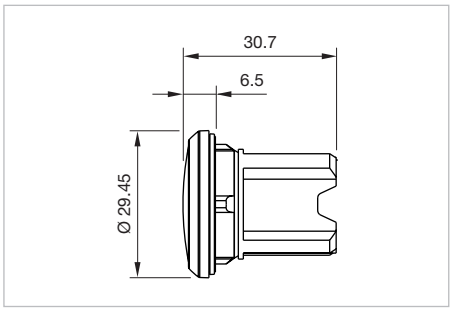

Dimensions [mm]

Mounting cut-out	Material	Colour	Part No.	Weight
Blind plug				
Ø 22.5 mm	Plastic	black	**45-506.1100**	0.010 kg
Blind plug				
Ø 22.5 mm	Metal sandgrey	silver	**45-506.3A00**	0.008 kg
Blind plug				
Ø 22.5 mm	Metal shiny	silver	**45-506.2A00**	0.038 kg

Locking device, IP66, IP67, IP69K

Product attribute	Dimension	Material	Colour	Part No.	Weight
Locking device					
for pushbutton with lens raised	47 x 43.1 x 25.1 mm	Metal	silver	**45-531.2100**	0.047 kg
Locking device					
for pushbutton with lens flat	47 x 43.1 x 25.1 mm	Metal	silver	**45-532.2100**	0.047 kg
for mushroom-head pushbutton Ø 30 mm or Ø 40 mm	47 x 43.1 x 25.1 mm	Metal	silver	**45-530.2100**	0.047 kg
Locking device					
for selector switch in position left	47 x 47.1 x 21.1 mm	Metal	silver	**45-534.2100**	0.047 kg
Locking device					
for selector switch in position center	47 x 47.1 x 21.1 mm	Metal	silver	**45-533.2100**	0.047 kg
Locking device					
for selector switch in position right	47 x 47.1 x 21.1 mm	Metal	silver	**45-536.2100**	0.047 kg
Locking device					
for selector switch in position center and right	47 x 47.1 x 21.1 mm	Metal	silver	**45-535.2100**	0.047 kg
Locking device					
for selector switch in position center and left	47 x 47.1 x 21.1 mm	Metal	silver	**45-537.2100**	0.047 kg

Spare key

Additional Information

- For standard lock RONIS T254

Product attribute	Part No.	Weight
Spare key		
2 spare keys	**45-522.0900**	0.007 kg

Rear side

Holder for 3 elements

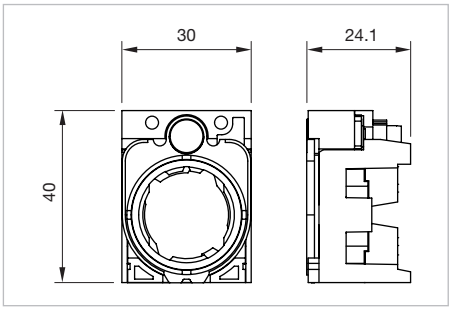

Dimensions [mm]

Product attribute	Material	Part No.	Compo-nent layout	Weight
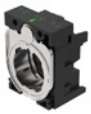 **Holder for 3 elements**				
for all buttons except selector switch 4 positions and toggle stick	Plastic	**45-2300.1000.000**	2	0.028 kg
Holder for 3 elements				
for all buttons except selector switch 4 positions and toggle stick	Metal	**45-2300.2000.000**	2	0.046 kg

The component layouts you will find from Page 145

Holder for 4 elements

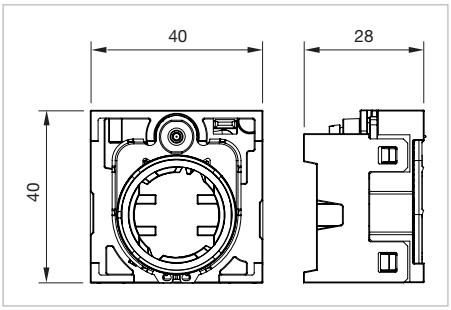

Dimensions [mm]

Product attribute	Material	Part No.	Compo-nent layout	Weight
Holder for 4 elements				
for selector switch 4 positions and toggle stick	Plastic	**45-2400.1000.000**	3	0.028 kg
Holder for 4 elements				
for selector switch 4 positions and toggle stick	Metal	**45-2400.2000.000**	3	0.046 kg

The component layouts you will find from Page 145

Switching element front mounting

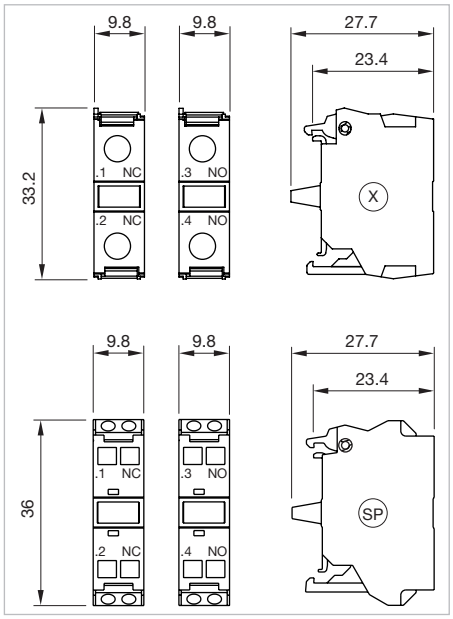

Dimensions [mm]
X = Screw terminal,
SP = Spring-type terminal

Switching current	Contacts	Contact material	Terminal	Part No.	Wiring diagram	Weight
Switching element						
10 A	1 NO	Silver	Screw	**45-311.1Z10**	1	0.010 kg
10 A	1 NC	Silver	Screw	**45-312.1Z10**	2	0.010 kg
Switching element						
10 A	1 NO	Silver	Spring-type terminal	**45-311.1Z40**	1	0.010 kg
10 A	1 NC	Silver	Spring-type terminal	**45-312.1Z40**	2	0.010 kg

.3 NO .4 NO	.1 NC 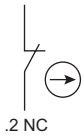 .2 NC
Wiring diagram 1	Wiring diagram 2

Switching element base mounting

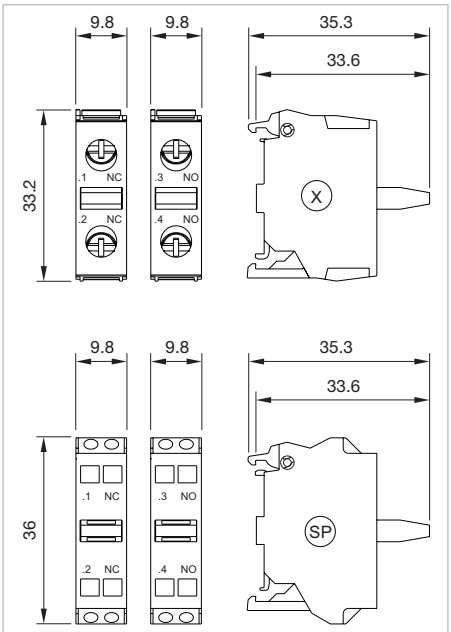

Dimensions [mm]
X = Screw terminal,
SP = Spring-type terminal

Switching current	Contacts	Contact material	Terminal	Part No.	Wiring diagram	Weight
Switching element						
10 A	1 NO	Silver	Screw	**45-311.2Z10**	1	0.010 kg
Switching element						
10 A	1 NC	Silver	Screw	**45-312.2Z10**	2	0.010 kg
Switching element						
10 A	1 NO	Silver	Spring-type terminal	**45-311.2Z40**	1	0.010 kg
Switching element						
10 A	1 NC	Silver	Spring-type terminal	**45-312.2Z40**	2	0.010 kg

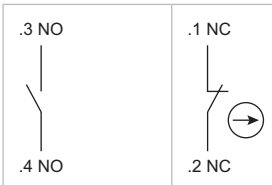

Wiring diagram 1 | Wiring diagram 2

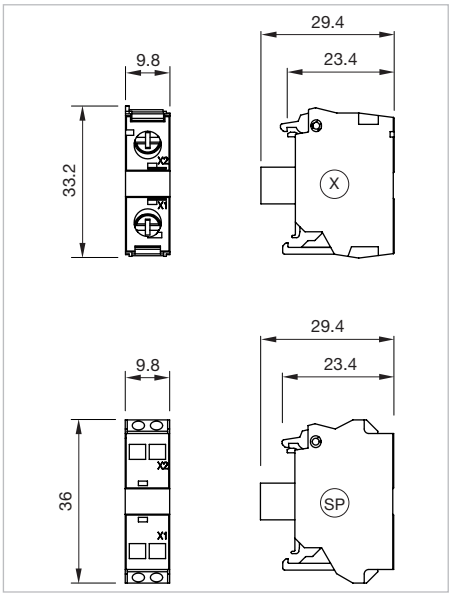

Dimensions [mm]
X = Screw terminal,
SP = Spring-type terminal

LED colour	Operating voltage	Lumi. intensityt	Terminal	Part No.	Wiring dia-gram	Weight
Illumination element						
red	6-24 VAC/DC	450...1120 mcd	Screw	**45-320.1E11**	1	0.009 kg
amber	6-24 VAC/DC	450...1120 mcd	Screw	**45-320.1F11**	1	0.009 kg
yellow	6-24 VAC/DC	900...1400 mcd	Screw	**45-320.1G11**	1	0.009 kg
green	6-24 VAC/DC	900...1400 mcd	Screw	**45-320.1H11**	1	0.009 kg
blue	6-24 VAC/DC	280...710 mcd	Screw	**45-320.1J11**	1	0.009 kg
white	6-24 VAC/DC	900...1400 mcd	Screw	**45-320.1N11**	1	0.009 kg
red	24-240 VAC/DC	450...1120 mcd	Screw	**45-320.1E12**	1	0.010 kg
amber	24-240 VAC/DC	450...1120 mcd	Screw	**45-320.1F12**	1	0.010 kg
yellow	24-240 VAC/DC	900...1400 mcd	Screw	**45-320.1G12**	1	0.010 kg
green	24-240 VAC/DC	900...1400 mcd	Screw	**45-320.1H12**	1	0.010 kg
blue	24-240 VAC/DC	280...710 mcd	Screw	**45-320.1J12**	1	0.010 kg
white	24-240 VAC/DC	900...1400 mcd	Screw	**45-320.1N12**	1	0.010 kg
red	24 VAC/DC	450...1120 mcd	Screw	**45-320.1E16**	1	0.009 kg
amber	24 VAC/DC	450...1120 mcd	Screw	**45-320.1F16**	1	0.009 kg
yellow	24 VAC/DC	900...1400 mcd	Screw	**45-320.1G16**	1	0.009 kg
green	24 VAC/DC	900...1400 mcd	Screw	**45-320.1H16**	1	0.009 kg
blue	24 VAC/DC	280...710 mcd	Screw	**45-320.1J16**	1	0.009 kg
white	24 VAC/DC	900...1400 mcd	Screw	**45-320.1N16**	1	0.009 kg
red	110 VAC	450...1120 mcd	Screw	**45-320.1E17**	1	0.010 kg
amber	110 VAC	450...1120 mcd	Screw	**45-320.1F17**	1	0.010 kg
yellow	110 VAC	900...1400 mcd	Screw	**45-320.1G17**	1	0.010 kg
green	110 VAC	900...1400 mcd	Screw	**45-320.1H17**	1	0.010 kg
blue	110 VAC	280...710 mcd	Screw	**45-320.1J17**	1	0.010 kg
white	110 VAC	900...1400 mcd	Screw	**45-320.1N17**	1	0.010 kg

LED colour	Operating voltage	Lumi. intensity	Terminal	Part No.	Wiring dia-gram	Weight
red	230 VAC	450...1120 mcd	Screw	**45-320.1E18**	1	0.010 kg
amber	230 VAC	450...1120 mcd	Screw	**45-320.1F18**	1	0.010 kg
yellow	230 VAC	900...1400 mcd	Screw	**45-320.1G18**	1	0.010 kg
green	230 VAC	900...1400 mcd	Screw	**45-320.1H18**	1	0.010 kg
blue	230 VAC	280...710 mcd	Screw	**45-320.1J18**	1	0.010 kg
white	230 VAC	900...1400 mcd	Screw	**45-320.1N18**	1	0.010 kg
Illumination element						
red	6-24 VAC/DC	450...1120 mcd	Spring-type terminal	**45-320.1E41**	1	0.009 kg
amber	6-24 VAC/DC	450...1120 mcd	Spring-type terminal	**45-320.1F41**	1	0.009 kg
yellow	6-24 VAC/DC	900...1400 mcd	Spring-type terminal	**45-320.1G41**	1	0.009 kg
green	6-24 VAC/DC	900...1400 mcd	Spring-type terminal	**45-320.1H41**	1	0.009 kg
blue	6-24 VAC/DC	280...710 mcd	Spring-type terminal	**45-320.1J41**	1	0.009 kg
white	6-24 VAC/DC	900...1400 mcd	Spring-type terminal	**45-320.1N41**	1	0.009 kg
red	24-240 VAC/DC	450...1120 mcd	Spring-type terminal	**45-320.1E42**	1	0.010 kg
amber	24-240 VAC/DC	450...1120 mcd	Spring-type terminal	**45-320.1F42**	1	0.010 kg
yellow	24-240 VAC/DC	900...1400 mcd	Spring-type terminal	**45-320.1G42**	1	0.010 kg
green	24-240 VAC/DC	900...1400 mcd	Spring-type terminal	**45-320.1H42**	1	0.010 kg
blue	24-240 VAC/DC	280...710 mcd	Spring-type terminal	**45-320.1J42**	1	0.010 kg
white	24-240 VAC/DC	900...1400 mcd	Spring-type terminal	**45-320.1N42**	1	0.010 kg
red	24 VAC/DC	450...1120 mcd	Spring-type terminal	**45-320.1E46**	1	0.009 kg
amber	24 VAC/DC	450...1120 mcd	Spring-type terminal	**45-320.1F46**	1	0.009 kg
yellow	24 VAC/DC	900...1400 mcd	Spring-type terminal	**45-320.1G46**	1	0.009 kg
green	24 VAC/DC	900...1400 mcd	Spring-type terminal	**45-320.1H46**	1	0.009 kg
blue	24 VAC/DC	280...710 mcd	Spring-type terminal	**45-320.1J46**	1	0.009 kg
white	24 VAC/DC	900...1400 mcd	Spring-type terminal	**45-320.1N46**	1	0.009 kg
red	110 VAC	450...1120 mcd	Spring-type terminal	**45-320.1E47**	1	0.010 kg
amber	110 VAC	450...1120 mcd	Spring-type terminal	**45-320.1F47**	1	0.010 kg
yellow	110 VAC	900...1400 mcd	Spring-type terminal	**45-320.1G47**	1	0.010 kg
green	110 VAC	900...1400 mcd	Spring-type terminal	**45-320.1H47**	1	0.010 kg
blue	110 VAC	280...710 mcd	Spring-type terminal	**45-320.1J47**	1	0.010 kg
white	110 VAC	900...1400 mcd	Spring-type terminal	**45-320.1N47**	1	0.010 kg
red	230 VAC	450...1120 mcd	Spring-type terminal	**45-320.1E48**	1	0.010 kg
amber	230 VAC	450...1120 mcd	Spring-type terminal	**45-320.1F48**	1	0.010 kg
yellow	230 VAC	900...1400 mcd	Spring-type terminal	**45-320.1G48**	1	0.010 kg
green	230 VAC	900...1400 mcd	Spring-type terminal	**45-320.1H48**	1	0.010 kg
blue	230 VAC	280...710 mcd	Spring-type terminal	**45-320.1J48**	1	0.010 kg
white	230 VAC	900...1400 mcd	Spring-type terminal	**45-320.1N48**	1	0.010 kg

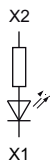

Wiring diagram 1

Illumination element base mounting

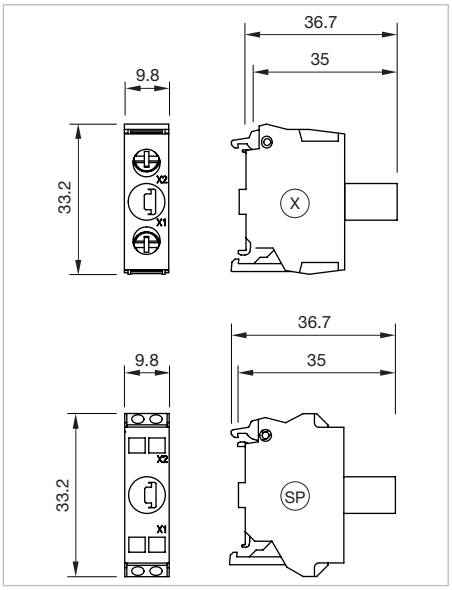

Dimensions [mm]
X = Screw terminal,
SP = Spring-type terminal

LED colour	Operating voltage	Lumi. intensity	Terminal	Part No.	Wiring dia-gram	Weight
Illumination element						
red	6-24 VAC/DC	450...1120 mcd	Screw	**45-320.2E11**	1	0.009 kg
amber	6-24 VAC/DC	450...1120 mcd	Screw	**45-320.2F11**	1	0.009 kg
yellow	6-24 VAC/DC	900...1400 mcd	Screw	**45-320.2G11**	1	0.009 kg
green	6-24 VAC/DC	900...1400 mcd	Screw	**45-320.2H11**	1	0.009 kg
blue	6-24 VAC/DC	280...710 mcd	Screw	**45-320.2J11**	1	0.009 kg
white	6-24 VAC/DC	900...1400 mcd	Screw	**45-320.2N11**	1	0.009 kg
red	24-240 VAC/DC	900...1400 mcd	Screw	**45-320.2E12**	1	0.009 kg
amber	24-240 VAC/DC	450...1120 mcd	Screw	**45-320.2F12**	1	0.009 kg
yellow	24-240 VAC/DC	900...1400 mcd	Screw	**45-320.2G12**	1	0.009 kg
green	24-240 VAC/DC	900...1400 mcd	Screw	**45-320.2H12**	1	0.009 kg
blue	24-240 VAC/DC	280...710 mcd	Screw	**45-320.2J12**	1	0.009 kg
white	24-240 VAC/DC	900...1400 mcd	Screw	**45-320.2N12**	1	0.009 kg
red	24 VAC/DC	450...1120 mcd	Screw	**45-320.2E16**	1	0.009 kg
amber	24 VAC/DC	450...1120 mcd	Screw	**45-320.2F16**	1	0.009 kg
yellow	24 VAC/DC	900...1400 mcd	Screw	**45-320.2G16**	1	0.009 kg
green	24 VAC/DC	900...1400 mcd	Screw	**45-320.2H16**	1	0.009 kg
blue	24 VAC/DC	280...710 mcd	Screw	**45-320.2J16**	1	0.009 kg
white	24 VAC/DC	900...1400 mcd	Screw	**45-320.2N16**	1	0.009 kg
red	110 VAC	450...1120 mcd	Screw	**45-320.2E17**	1	0.009 kg
amber	110 VAC	450...1120 mcd	Screw	**45-320.2F17**	1	0.009 kg
yellow	110 VAC	900...1400 mcd	Screw	**45-320.2G17**	1	0.009 kg
green	110 VAC	900...1400 mcd	Screw	**45-320.2H17**	1	0.009 kg
blue	110 VAC	280...710 mcd	Screw	**45-320.2J17**	1	0.009 kg
white	110 VAC	900...1400 mcd	Screw	**45-320.2N17**	1	0.009 kg

LED colour	Operating voltage	Lichtstärke	Terminal	Part No.	Wiring dia-gram	Weight
red	230 VAC	450...1120 mcd	Screw	**45-320.2E18**	1	0.009 kg
amber	230 VAC	450...1120 mcd	Screw	**45-320.2F18**	1	0.009 kg
yellow	230 VAC	900...1400 mcd	Screw	**45-320.2G18**	1	0.009 kg
green	230 VAC	900...1400 mcd	Screw	**45-320.2H18**	1	0.009 kg
blue	230 VAC	280...710 mcd	Screw	**45-320.2J18**	1	0.009 kg
white	230 VAC	900...1400 mcd	Screw	**45-320.2N18**	1	0.009 kg
Illumination element						
red	6-24 VAC/DC	450...1120 mcd	Spring-type terminal	**45-320.2E41**	1	0.009 kg
amber	6-24 VAC/DC	450...1120 mcd	Spring-type terminal	**45-320.2F41**	1	0.009 kg
yellow	6-24 VAC/DC	900...1400 mcd	Spring-type terminal	**45-320.2G41**	1	0.009 kg
green	6-24 VAC/DC	900...1400 mcd	Spring-type terminal	**45-320.2H41**	1	0.009 kg
blue	6-24 VAC/DC	280...710 mcd	Spring-type terminal	**45-320.2J41**	1	0.009 kg
white	6-24 VAC/DC	900...1400 mcd	Spring-type terminal	**45-320.2N41**	1	0.009 kg
red	24-240 VAC/DC	450...1120 mcd	Spring-type terminal	**45-320.2E42**	1	0.009 kg
amber	24-240 VAC/DC	450...1120 mcd	Spring-type terminal	**45-320.2F42**	1	0.009 kg
yellow	24-240 VAC/DC	900...1400 mcd	Spring-type terminal	**45-320.2G42**	1	0.009 kg
green	24-240 VAC/DC	900...1400 mcd	Spring-type terminal	**45-320.2H42**	1	0.009 kg
blue	24-240 VAC/DC	280...710 mcd	Spring-type terminal	**45-320.2J42**	1	0.009 kg
white	24-240 VAC/DC	900...1400 mcd	Spring-type terminal	**45-320.2N42**	1	0.009 kg
red	24 VAC/DC	450...1120 mcd	Spring-type terminal	**45-320.2E46**	1	0.009 kg
amber	24 VAC/DC	450...1120 mcd	Spring-type terminal	**45-320.2F46**	1	0.009 kg
yellow	24 VAC/DC	900...1400 mcd	Spring-type terminal	**45-320.2G46**	1	0.009 kg
green	24 VAC/DC	900...1400 mcd	Spring-type terminal	**45-320.2H46**	1	0.009 kg
blue	24 VAC/DC	280...710 mcd	Spring-type terminal	**45-320.2J46**	1	0.009 kg
white	24 VAC/DC	900...1400 mcd	Spring-type terminal	**45-320.2N46**	1	0.009 kg
red	110 VAC	450...1120 mcd	Spring-type terminal	**45-320.2E47**	1	0.009 kg
amber	110 VAC	450...1120 mcd	Spring-type terminal	**45-320.2F47**	1	0.009 kg
yellow	110 VAC	900...1400 mcd	Spring-type terminal	**45-320.2G47**	1	0.009 kg
green	110 VAC	900...1400 mcd	Spring-type terminal	**45-320.2H47**	1	0.009 kg
blue	110 VAC	280...710 mcd	Spring-type terminal	**45-320.2J47**	1	0.009 kg
white	110 VAC	900...1400 mcd	Spring-type terminal	**45-320.2N47**	1	0.009 kg
red	230 VAC	450...1120 mcd	Spring-type terminal	**45-320.2E48**	1	0.009 kg
amber	230 VAC	450...1120 mcd	Spring-type terminal	**45-320.2F48**	1	0.009 kg
yellow	230 VAC	900...1400 mcd	Spring-type terminal	**45-320.2G48**	1	0.009 kg
green	230 VAC	900...1400 mcd	Spring-type terminal	**45-320.2H48**	1	0.009 kg
blue	230 VAC	280...710 mcd	Spring-type terminal	**45-320.2J48**	1	0.009 kg
white	230 VAC	900...1400 mcd	Spring-type terminal	**45-320.2N48**	1	0.009 kg

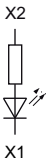

Wiring diagram 1

Illumination element PCB mounting

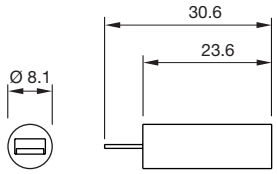

Dimensions [mm]
X = Screw terminal,
SP = Spring-type terminal

LED colour	Operating voltage	Terminal	Part No.	Wiring dia-gram	Weight
Illumination element					
red	5 VDC	PCB terminal	**45-320.3E60**	1	0.009 kg
amber	5 VDC	PCB terminal	**45-320.3F60**	1	0.009 kg
yellow	5 VDC	PCB terminal	**45-320.3G60**	1	0.009 kg
green	5 VDC	PCB terminal	**45-320.3H60**	1	0.009 kg
blue	5 VDC	PCB terminal	**45-320.3J60**	1	0.009 kg
white	5 VDC	PCB terminal	**45-320.3N60**	1	0.009 kg

Wiring diagram 1

Test module

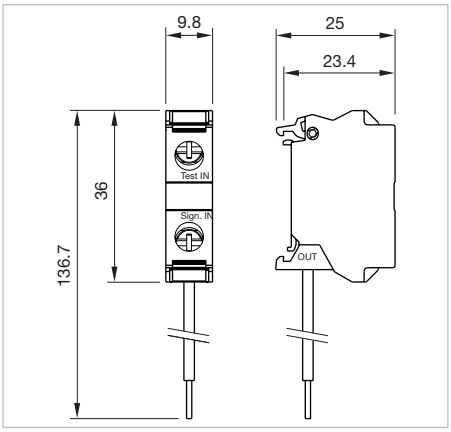

Dimensions [mm]
X = Screw terminal,
SP = Spring-type terminal

Product attribute	Operating voltage	Terminal	Part No.	Wiring dia-gram	Weight
Test module front mounting					
front plate mounting	12-240 VAC/DC	Screw	**45-330.1115**	1	0.011 kg
Test module base mounting					
base mounting	12-240 VAC/DC	Screw	**45-330.2115**	1	0.011 kg

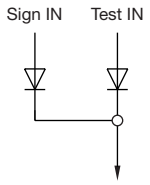

Wiring diagram 1

Extension plungers

Product attribute	Material	Colour	Part No.	Weight
Extension plungers				
for pushbutton with extended stroke	Plastic	black	**45-50M.1900**	0.009 kg

Legend plate for switching elements

Additional Information

- Without inscription
- In support of the dust resistance

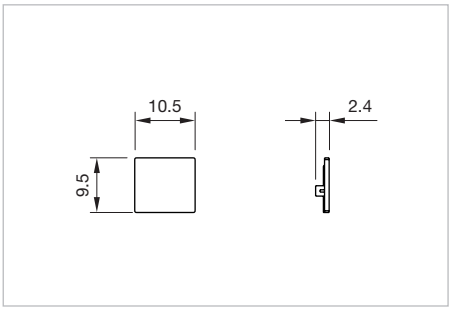

Dimensions [mm]

Product attribute	Dimension	Material	Colour	Part No.	Weight
Legend plate					
for snapping in place	10.5 x 9.5 mm	Plastic	white	**45-523.1900**	0.001 kg

Mounting

Enclosure, IP66, IP67, IP69K

Additional Information

- Openings for cable gland M16 or M20

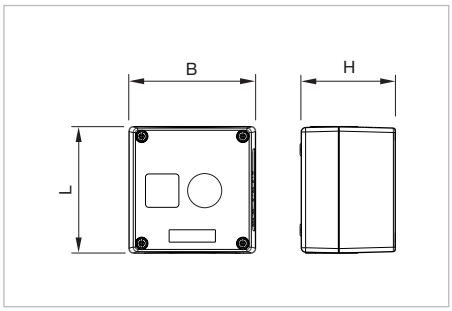

Dimensions [mm]

Product attribute	Dimension	Material	Colour	Part No.	Weight
Enclosure					
1 mounting hole Ø 22.3 mm	L 85 x B 85 x H 64 mm	Plastic	grey	**45-430.1801**	0.251 kg
Enclosure					
1 mounting hole Ø 22.3 mm	L 85 x B 85 x H 64 mm	Plastic	yellow	**45-410.1401**	0.248 kg
Enclosure					
1 mounting hole Ø 22.3 mm, for base mounting, top and bottom 1 x M20	L 89.4 x B 85 x H 64 mm	Metal	yellow	**45-410.2403**	0.478 kg
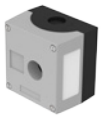 **Enclosure**					
1 mounting hole Ø 22.3 mm, for base mounting, top and bottom 1 x M20	L 89.4 x B 85 x H 64 mm	Metal	grey	**45-430.2803**	0.479 kg
Enclosure					
1 mounting hole Ø 22.3 mm, with protective shroud	L 85 x B 85 x H 64 mm	Plastic	yellow	**45-420.1401**	0.287 kg
Enclosure					
1 mounting hole Ø 22.3 mm, with protective shroud, for base mounting, top and bottom 1 x M20	L 89.4 x B 85 x H 64 mm	Metal	grey	**45-420.2803**	0.568 kg

Product attribute	Dimension	Material	Colour	Part No.	Weight
Enclosure					
2 mounting holes Ø 22.3 mm	L 114 x B 85 x H 64 mm	Plastic	grey	**45-440.1801**	0.299 kg
2 mounting holes Ø 22.3 mm, for base mounting, top and bottom 1 x M20	L 118 x B 85 x H 64 mm	Metal	grey	**45-440.2803**	0.299 kg
Enclosure					
3 mounting holes Ø 22.3 mm	L 154 x B 85 x H 64 mm	Plastic	grey	**45-450.1801**	0.364 kg
3 mounting holes Ø 22.3 mm, for base mounting, top and bottom 1 x M20	L 158 x B 85 x H 64 mm	Metal	grey	**45-450.2803**	0.683 kg
Enclosure					
4 mounting holes Ø 22.3 mm	L 194 x B 85 x H 64 mm	Plastic	grey	**45-460.1802**	0.436 kg
4 mounting holes Ø 22.3 mm, for base mounting, top and bottom 1 x M20	L 199 x B 85 x H 64 mm	Metal	grey	**45-460.2804**	0.799 kg
Enclosure					
6 mounting holes Ø 22.3 mm	L 280 x B 85 x H 64 mm	Plastic	grey	**45-470.1802**	0.602 kg
6 mounting holes Ø 22.3 mm, for base mounting, top and bottom 1 x M20	L 285 x B 85 x H 64 mm	Metal	grey	**45-470.2804**	1.081 kg

Cable gland, IP66, IP67, IP69K

Thread	Material	Colour	Part No.	Weight
Cable gland				
M20	Plastic	black	**45-507.1100**	0.016 kg
M25	Plastic	black	**45-509.1100**	0.022 kg

Connection piece, IP 68

Product attribute	Thread	Material	Colour	Part No.	Weight
Connection piece					
for connecting 2 enclosures, with hexagonal nut	M20/M20	Plastic	black	**45-50C.1900**	0.050 kg
Connection piece					
for connecting 2 enclosures, with hexagonal nut	M20/M25	Plastic	black	**45-50D.1900**	0.055 kg
Connection piece					
for connecting 2 enclosures, with hexagonal nut	M25/M25	Plastic	black	**45-50E.1900**	0.060 kg
Connection piece					
for connecting 2 enclosures, with hexagonal nut	M20/M20	Metal	silver	**45-50C.2900**	0.055 kg
Connection piece					
for connecting 2 enclosures, with hexagonal nut	M20/M25	Metal	silver	**45-50D.2900**	0.075 kg
Connection piece					
for connecting 2 enclosures, with hexagonal nut	M25/M25	Metal	silver	**45-50E.2900**	0.077 kg

Enclosure cover monitoring

Product attribute	Material	Colour	Part No.	Weight
Enclosure cover monitoring				
with extension plungers	Plastic	black	**45-50G.0900**	0.007 kg

Drawings

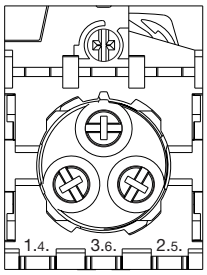

Component layout 1

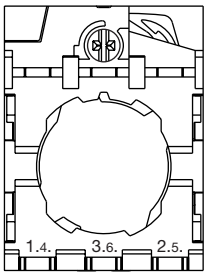

Component layout 2

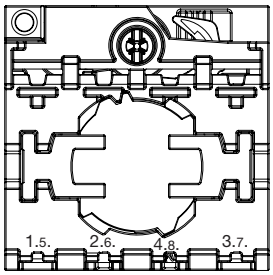

Component layout 3

Arrangement switching element correspondens to designation of front adaptor

	1	3	2
Switching action green (white) button pressed			■
red (black) button pressed	■		

■ Switching element

Component layout 4

Dimensions incl. mounting depth of 3 or 4 elements

Indicator, Pushbutton, Illuminated pushbutton (flush design)

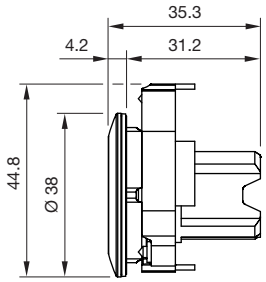

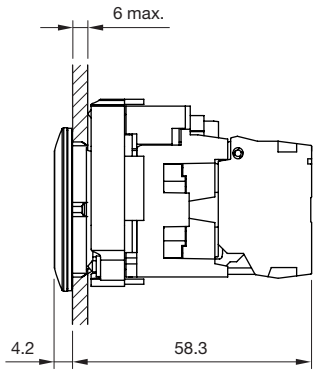

Keylock switch (flush design)

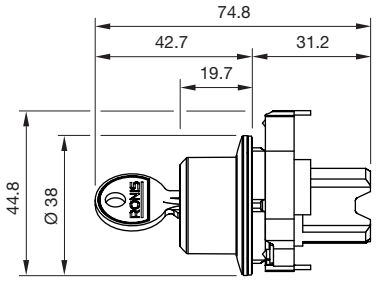

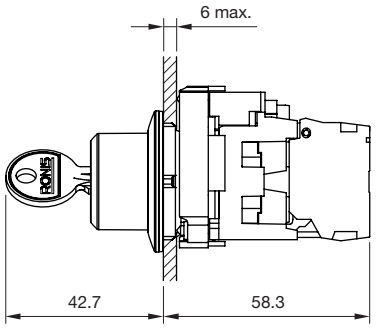

Selector switch short lever (flush design)

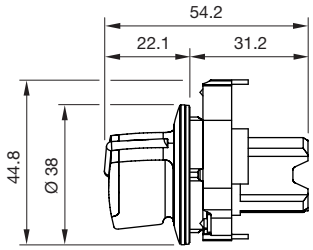

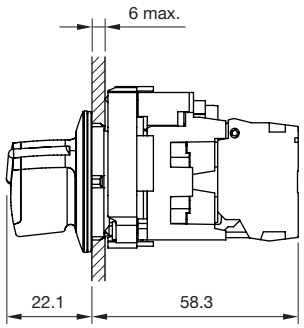

Selector switch long lever (flush design)

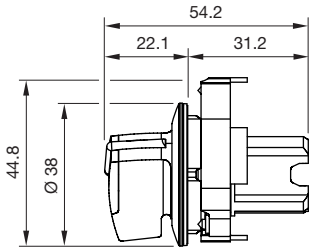

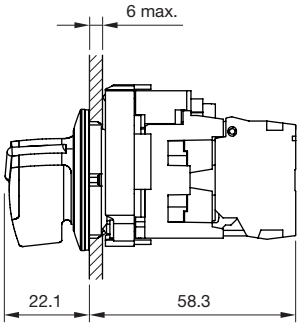

Indicator full face illumination (raised design)

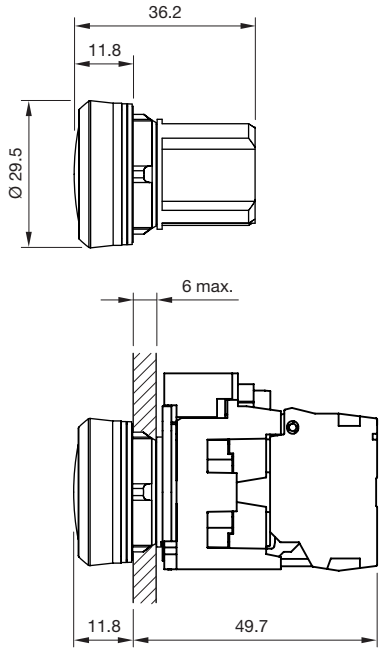

Indicator front illumination,
Pushbutton, Illuminated pushbutton, Lens level with front ring (raised design)

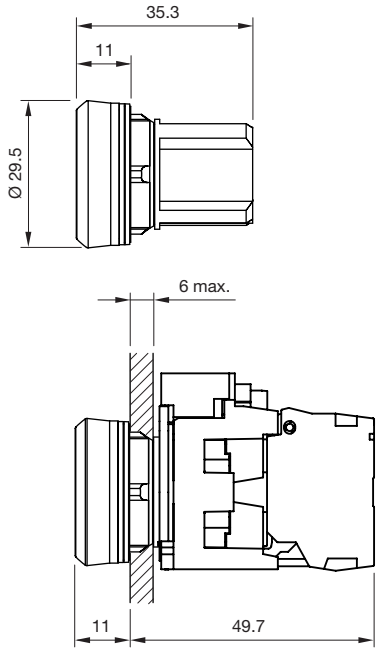

Pushbutton, Illuminated pushbutton, lens raised above front ring (raised design)

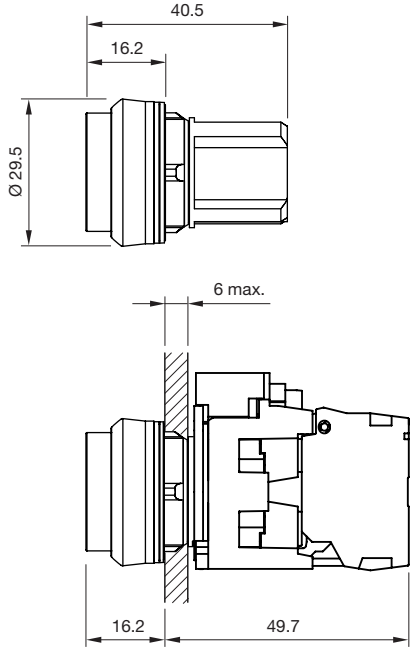

Pushbutton, lens lower than front ring (raised design)

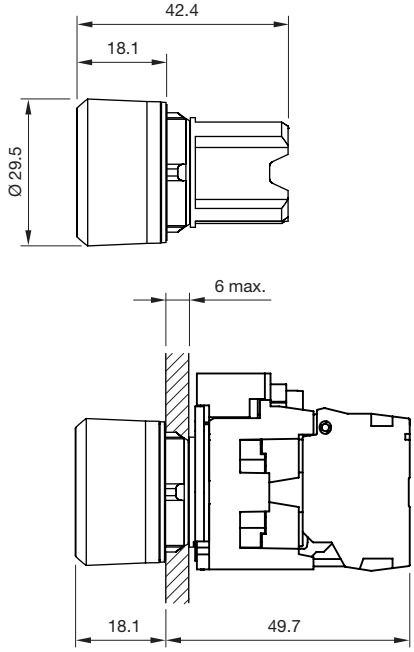

Pushbutton, Illuminated pushbutton, lens lower than front ring, with castellation (raised design)

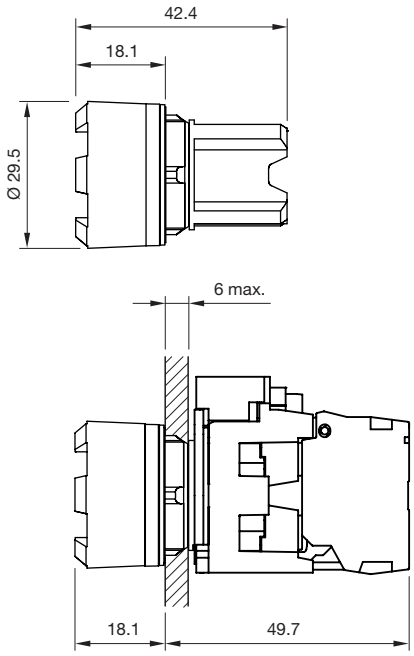

Double pushbutton, Lens level with front ring (raised design)

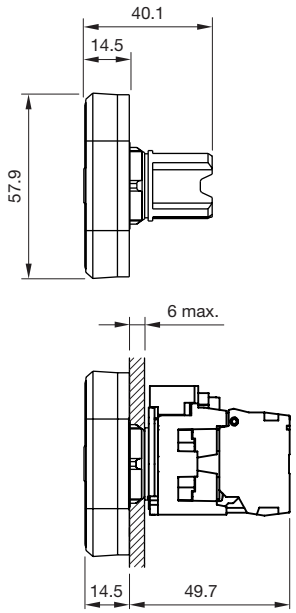

Double pushbutton, level with/raised above front ring (raised design)

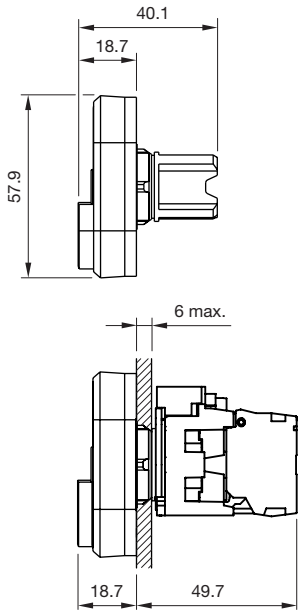

Emergency stop switch Ø 33.8 mm (raised design)

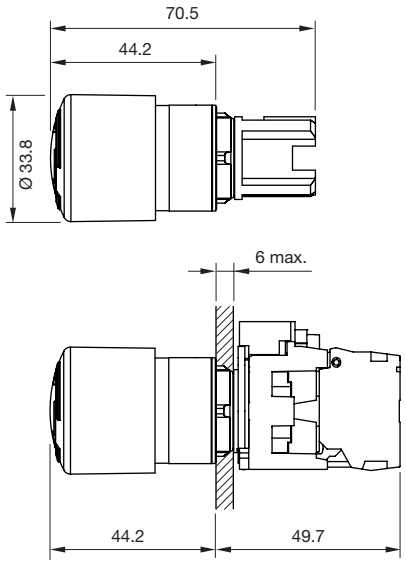

Emergency stop switch, Stop switch Ø 40 mm (raised design)

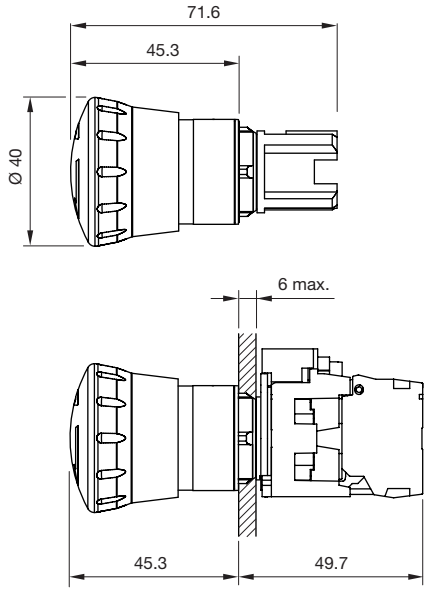

Emergency stop switch, Stop switch Ø 40 mm (raised design)

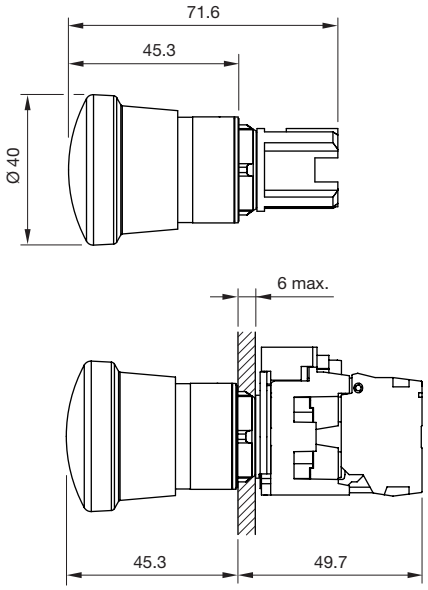

Emergency stop switch Ø 60 mm (raised design)

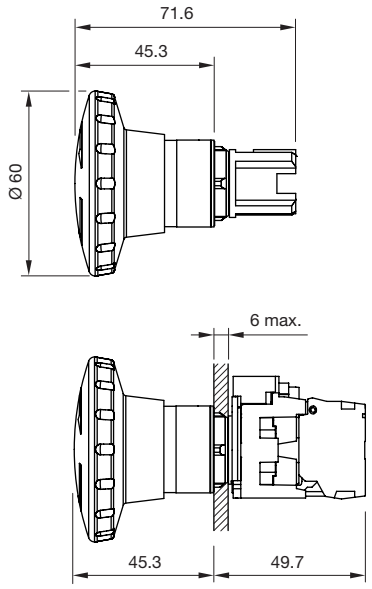

Emergency stop switch with key Ø 40 mm (raised design)

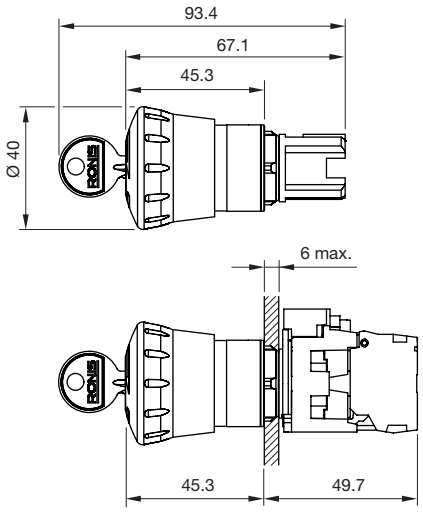

45 Drawings

Stop switch Ø 29.5 mm (raised design)

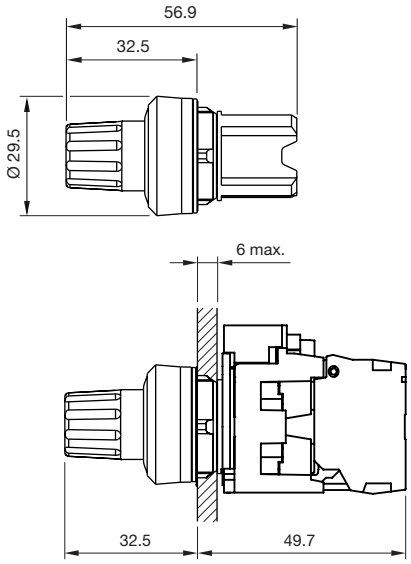

Mushroom-head pushbutton Ø 30 mm (raised design)

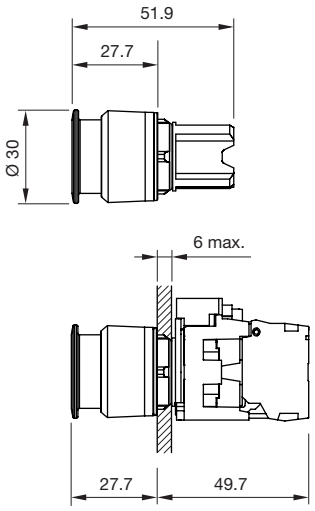

Mushroom-head pushbutton Momentary, Maintain, Ø 40 mm (raised design)

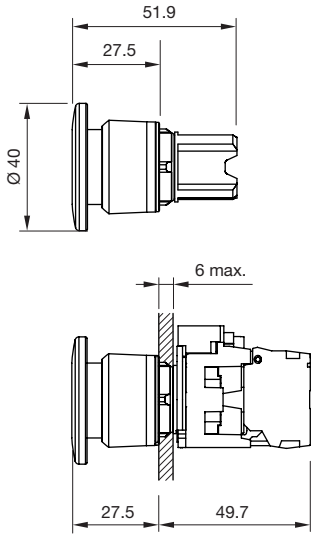

Mushroom-head pushbutton Momentary/Maintain, Momentary/Momentary, Ø 40 mm (raised design)

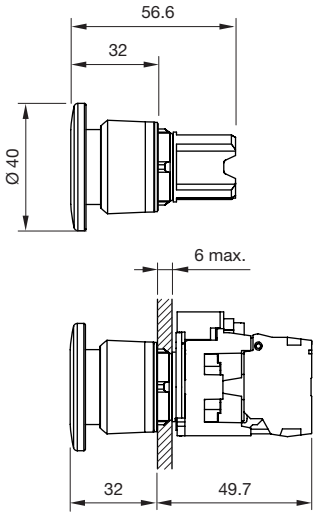

Mushroom-head pushbutton Ø 60 mm (raised design)

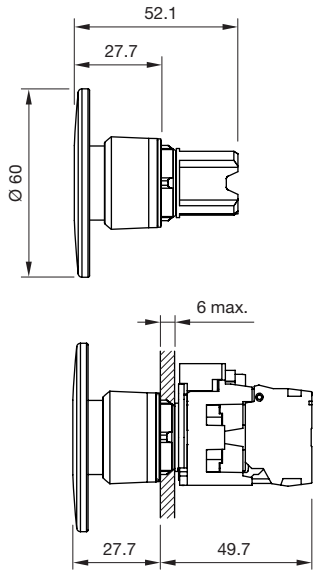

Keylock switch (raised design)

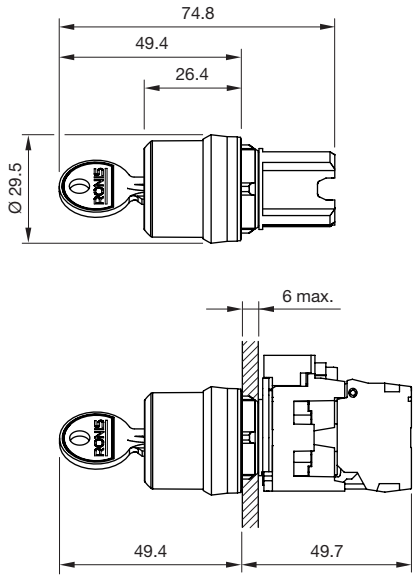

Selector switch, round lever (raised design)

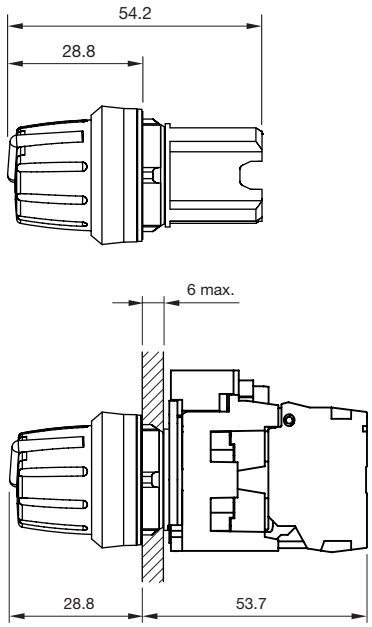

Selector switch, short lever (raised design)

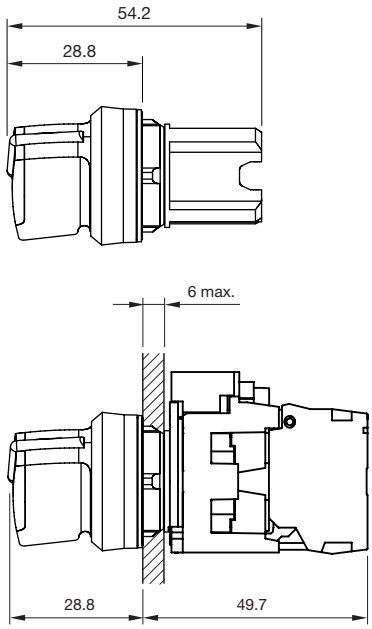

45 Drawings

Selector switch, long lever (raised design)

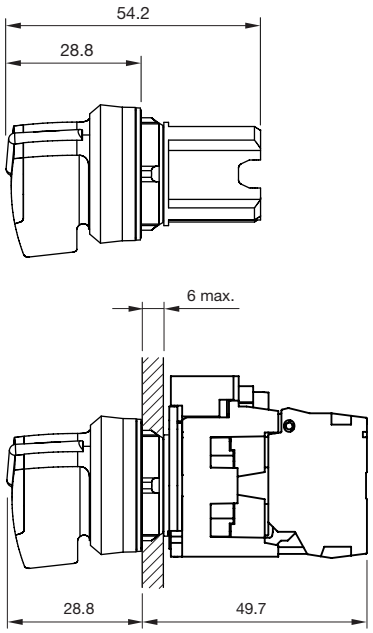

Potentiometer (raised design)

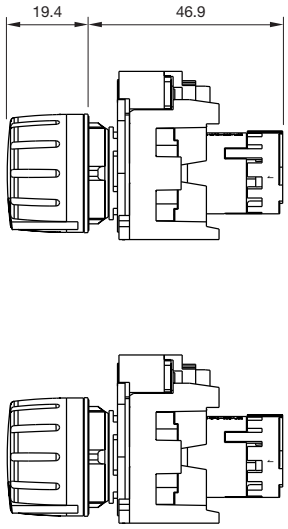

Toggle stick (raised design)

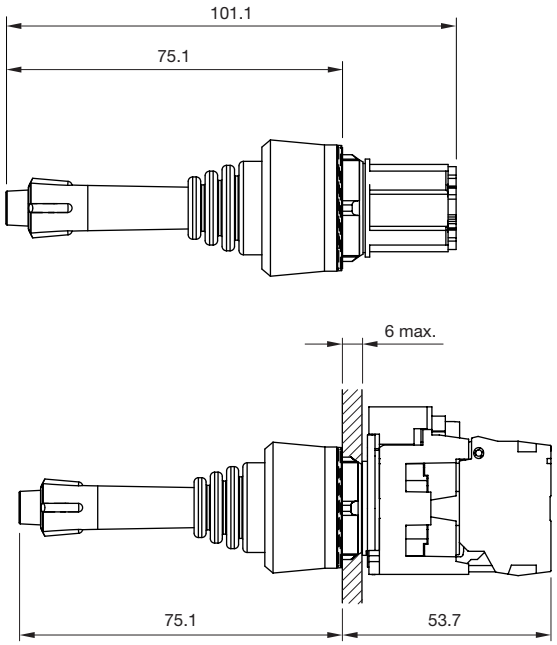

Toggle switch (raised design)

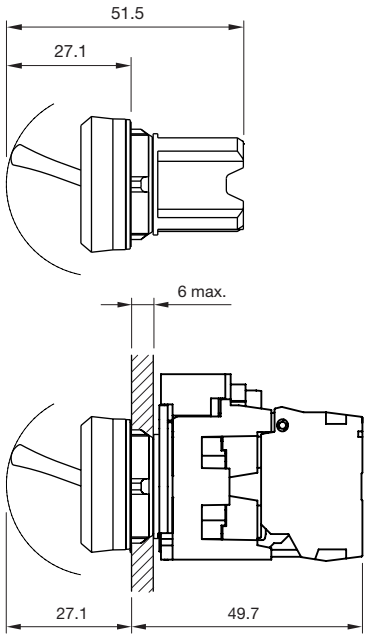

Indicator actuator

Material

Actuator element
Plastic

Front ring
Plastic or metal

Actuator housing
Plastic or metal

Mechanical characteristics

Vibration resistance
according to IEC 60068-2-6
2 … 500 Hz: 5 g

Shock resistance
according to IEC 60068-2-27
Sinusoidal half-wave 50 g /11 ms

Environmental conditions

Operating temperature
–25 °C … +70 °C

Storage temperature
–40 °C … +80 °C

Protection degree
IP66, IP67, IP69K

Environmental category
during operation according to IEC 60721:
3K6, 3C3, 3S2, 3M6

Pushbutton actuator

Material

Actuator element
Plastic

Front ring
Plastic or metal

Actuator housing
Plastic or metal

Mechanical characteristics

Operating frequency
Lens flat/level with front bezel:
- Momentary max. 3 600/h
- Maintain max. 1 800/h
Lens flat/raised above front ring:
- Momentary max. 3 600/h
- Maintain max. 1 800/h
Lens flat/lower than front ring:
- Momentary max. 3 600/h
Lens flat/lower than front ring, with castellation:
- Momentary max. 3 600/h

Mechanical lifetime
Lens flat/level with front bezel:
- Momentary 10 000 000 switching cycles
- Maintain 500 000 switching cycles
Lens flat/raised above front ring:
- Momentary 10 000 000 switching cycles
- Maintain 500 000 switching cycles
Lens flat/lower than front ring:
- Momentary 10 000 000 switching cycles
Lens flat/lower than front ring, with castellation:
- Momentary 10 000 000 switching cycles

Vibration resistance
according to IEC 60068-2-6
20 … 500 Hz: 5 g

Shock resistance
according to IEC 60068-2-27
Sinusoidal half-wave 50 g /11 ms

Environmental conditions

Operating temperature
–25 °C … +70 °C

Storage temperature
–40 °C … +80 °C

Protection degree
IP66, IP67, IP69K

Environmental category
during operation according to IEC 60721:
3K6, 3C3, 3S2, 3M6

Double pushbutton actuator, Double pushbutton actuator illuminated

Material

Actuator element
Plastic

Front ring
Plastic or metal

Actuator housing
Plastic or metal

Mechanical characteristics

Operating frequency
max. 3 600/h

Mechanical lifetime
2 000 000 switching cycles

Vibration resistance
according to IEC 60068-2-6
10 … 500 Hz: 5 g

Shock resistance
according to IEC 60068-2-27
Sinusoidal half-wave 50 g /11 ms

Environmental conditions

Operating temperature
–25 °C … +70 °C

Storage temperature
–40 °C … +80 °C

Protection degree
IP66, IP67, IP69K

Environmental category
during operation according to IEC 60721:
3K6, 3C3, 3S2, 3M6, 2B2

Illuminated pushbuton actuator

Material

Actuator element
Plastic

Front ring
Plastic or metal

Actuator housing
Plastic or metal

Mechanical characteristics

Operating frequency
Lens flat/level with front bezel:
- Momentary max. 3 600/h
- Maintain max. 1 800/h
Lens flat/raised above front ring:
- Momentary max. 3 600/h
Lens flat/lower than front ring, with castellation:
- Momentary max. 3 600/h

Mechanical lifetime
Lens flat/level with front bezel:
- Momentary 3 000 000 switching cycles
- Maintain 500 000 switching cycles
Lens flat/raised above front ring:
- Momentary 3 000 000 switching cycles
Lens flat/lower than front ring, with castellation:
- Momentary 3 000 000 switching cycles

Vibration resistance
according to IEC 60068-2-6
20 … 500 Hz: 5 g

Shock resistance
according to IEC 60068-2-27
Sinusoidal half-wave 50 g /11 ms

Environmental conditions

Operating temperature
–25 °C … +70 °C

Storage temperature
–40 °C … +80 °C

Protection degree
IP66, IP67, IP69K

Environmental category
during operation according to IEC 60721:
3K6, 3C3, 3S2, 3M6

Emergency stop switch actuator

Material

Actuator element
Plastic red

Actuator housing
Plastic or metal

Mechanical characteristics

Type of unlocking device
Twist to release, pull release or key to release

Operating frequency
max. 600/h

Mechanical lifetime
300 000 switching cycles

Vibration resistance
according to IEC 60068-2-6
2 … 500 Hz: 5 g

Shock resistance
according to IEC 60068-2-27
Sinusoidal half-wave 50 g /11 ms

Environmental conditions

Operating temperature
–25 °C … +70 °C

Storage temperature
–40 °C … +80 °C

Protection degree
IP66, IP67, IP69K

Environmental category
during operation according to IEC 60721:
3K6, 3C3, 3S2, 3M6

Stop switch actuator

Material

Actuator element
Plastic red

Actuator housing
Plastic or metal

Mechanical characteristics

Type of unlocking device
Twist to release

Operating frequency
max. 600/h

Mechanical lifetime
300 000 switching cycles

Vibration resistance
according to IEC 60068-2-6
2 … 500 Hz: 5 g

Shock resistance
according to IEC 60068-2-27
Sinusoidal half-wave 50 g /11 ms

Environmental conditions

Operating temperature
–25 °C … +70 °C

Storage temperature
–40 °C … +80 °C

Protection degree
IP66, IP67, IP69K

Environmental category
during operation according to IEC 60721:
3K6, 3C3, 3S2, 3M6

Mushroom-head pushbuton actuator

Material

Actuator element
Plastic

Actuator housing
Plastic or metal

Mechanical characteristics

Type of unlocking device
Pull release

Operating frequency
- Momentary max. 3 600/h
- Maintain max. 1 800/h

Mechanical lifetime
- Momentary 10 000 000 switching cycles
- Maintain 500 000 switching cycles

Vibration resistance
according to IEC 60068-2-6
20 … 500 Hz: 5 g

Shock resistance
according to IEC 60068-2-27
Sinusoidal half-wave 50 g /11 ms

Environmental conditions

Operating temperature
–25 °C … +70 °C

Storage temperature
–40 °C … +80 °C

Protection degree
IP66, IP67, IP69K

Environmental category
during operation according to IEC 60721:
3K6, 3C3, 3S2, 3M6

Keylock switch actuator

Material

Actuator element
Metal

Front ring
Plastic or metal

Actuator housing
Plastic or metal

Mechanical characteristics

Operating frequency
max. 1800/h

Mechanical lifetime
1 000 000 switching cycles

Vibration resistance
according to IEC 60068-2-6
10 … 500 Hz: 5 g

Shock resistance
according to IEC 60068-2-27
Sinusoidal half-wave 50 g /11 ms

Environmental conditions

Operating temperature
–25 °C … +70 °C

Storage temperature
–40 °C … +80 °C

Protection degree
IP66, IP67, IP69K

Environmental category
during operation according to IEC 60721:
3K6, 3C3, 3S2, 3M6

Selector switch actuator

Material

Actuator element
Round lever, plastic, illuminable
Short lever, plastic, illuminable
Long lever, plastic, illuminable

Front ring
Plastic or metal

Actuator housing
Plastic or metal

Mechanical characteristics

Operating frequency
max. 1800/h

Mechanical lifetime
1 000 000 switching cycles

Vibration resistance
according to IEC 60068-2-6
10 … 500 Hz: 5 g

Shock resistance
according to IEC 60068-2-27
Sinusoidal half-wave 50 g /11 ms

Environmental conditions

Operating temperature
–25 °C … +70 °C

Storage temperature
–40 °C … +80 °C

Protection degree
IP66, IP67, IP69K

Environmental category
during operation according to IEC 60721:
3K6, 3C3, 3S2, 3M6

Potentiometer

Material

Actuator element
Round lever, plastic

Front ring
Plastic or metal

Actuator housing
Plastic or metal

Mechanical characteristics

Terminals
Screw terminal
- Solid 2 x (1.0 … 1.5 mm²)
- With end sleeves 2 x (0.5 … 0.75 mm²)
- Finely stranded
- Without end sleeves 2 x (0.5 … 0.75 mm²)
- With end sleeves 2 x (0.5 … 1.5 mm²)
- For AWG cables for auxiliary contacts 2 x (18 … 14)

Tightening torque
0.8 … 1 Nm

Operating frequency
max. 1 800/h

Mechanical lifetime
25 000 switching cycles

Vibration resistance
according to IEC 60068-2-6
10 … 500 Hz: 5 g

Shock resistance
according to IEC 60068-2-27
Sinusoidal half-wave 50 g /11 ms

Slewing range
275° ±2°

Electrical characteristics

Active power consumption
0.5 W

Insulation voltage
Rated value 500 V

Environmental conditions

Operating temperature
–25 °C … +70 °C

Storage temperature
–40 °C … +80 °C

Protection degree
IP66, IP67, IP69K

Environmental category
during operation according to IEC 60721:
3K6, 3C3, 3S2, 3M6

Toggle stick actuator

Material

Actuator element
Plastic

Front ring
Plastic or metal

Actuator housing
Plastic or metal

Mechanical characteristics

Operating frequency
3 600/h

Mechanical lifetime
Momentary: 250 000 switching cycles

Vibration resistance
according to IEC 60068-2-6
10 … 500 Hz: 5 g

Shock resistance
according to IEC 60068-2-27
Sinusoidal half-wave 50 g /11 ms

Environmental conditions

Operating temperature
–25 °C … +70 °C

Storage temperature
–40 °C … +80 °C

Protection degree
IP65, IP67

Environmental category
during operation according to IEC 60721:
3K6, 3C3, 3S2, 3M6

Toggle switch actuator

Material

Actuator element
Plastic

Front ring
Plastic or metal

Actuator housing
Plastic or metal

Mechanical characteristics

Operating frequency
max. 1 800/h

Mechanical lifetime
1 000 000 switching cycles

Vibration resistance
according to IEC 60068-2-6
10 … 500 Hz: 5 g

Shock resistance
according to IEC 60068-2-27
Sinusoidal half-wave 50 g /11 ms

Environmental conditions

Operating temperature
–25 °C … +70 °C

Storage temperature
–40 °C … +80 °C

Protection degree
IP66, IP67, IP69K

Environmental category
during operation according to IEC 60721:
3K6, 3C3, 3S2, 3M6

Slow-make switching element

Switching system

The double-break, slow-make switching element is equipped with normally open or normally closed contact. The normally closed contact has forced opening. Slow-make contacts with forced action are ideal for high switch ratings. Up to six switching elements can be snapped to each holder.

The NC contact opens automatically upon disconnection of the actuator. On delivery, the contact is open (= safe state). Activation (= NC contacts on the non-actuated commanding device are closed) takes place upon first-time actuation after the contact block is snapped onto the actuator.

Material

Material of contact
Silver alloy

Housing
Plastic

Mechanical characteristics

Terminals
Screw terminal
- Solid 2 x (1.0 … 1.5 mm²)
- With end sleeves 2 x (0.5 … 0.75 mm²)
- Finely stranded
- Without end sleeves 2 x (0.5 … 0.75 mm²)
- With end sleeves 2 x (0.5 … 1.5 mm²)
- For AWG cables for auxiliary contacts 2 x (18 … 14)

Spring-type terminal (SP)
- Solid 2 x (0.25 … 1.5 mm²)
- Finely stranded
- Without end sleeves 2 x (0.5 … 1.5 mm²)
- With end sleeves 2 x (0.5 … 0.75 mm²)
- For AWG cables for auxiliary contacts 2 x (24 … 16)

Tightening torque
Screw terminal, spring-type terminal 0.8 … 0.9 Nm

Operating frequency
max. 3 600/h

Mechanical lifetime
10 000 000 switching cycles

Vibration resistance
according to IEC 60068-2-6
2 … 500 Hz: 5 g

Shock resistance
according to IEC 60068-2-27
Sinusoidal half-wave 50 g /11 ms

Electrical characteristics

Standards
The switches comply with the “Standards for low-voltage switching devices” EN IEC 60947-5-1

Thermal current
10 A

Insulation voltage
Rated value 500 V

Pollution degree
3

Surge voltage resistance
Rated value 6 kV

Contact reliability
One contact failure per 100 million switching operations (17 V, 5 mA)
One contact failure per 10 million switching operations (5 V, 1 mA)

Operating voltage
at AC
- Rated value 5 … 500 V

at DC
- Rated value 5 … 500 V

Operating current
at AC-12

Voltage	24 V	230 V	500 V
Current	10 A	10 A	10 A

at AC-15

Voltage	24V	230 V	400 V	500 V
Current	6 A	6 A	3 A	1.4 A

at DC-12

Voltage	24 V	48 V	110 V	230 V	400 V	500 V
Current	10 A	5 A	2.5 A	1 A	0.3 A	0.2 A

at DC-13

Voltage	24 V	48 V	110 V	230 V	400 V	500 V
Current	3 A	1.5 A	0.7 A	0.3 A	0.1 A	0.07 A

Environmental conditions

Operating temperature
–25 °C … +70 °C

Storage temperature
–40 °C … +80 °C

Protection degree
Housing IP40
Terminal IP20

Environmental category
during operation according to IEC 60721:
3K6, 3C3, 3S2, 3M6

Approvals

Approbations
CCC
CSA
UL

Illumination element

Material

Housing
Plastic

Mechanical characteristics

Terminals
Screw terminal
- Solid 2 x (1.0 … 1.5 mm²)
- With end sleeves 2 x (0.5 … 0.75 mm²)
- Finely stranded
- Without end sleeves 2 x (0.5 … 0.75 mm²)
- With end sleeves 2 x (0.5 … 1.5 mm²)
- For AWG cables for auxiliary contacts 2 x (18 … 14)

Spring-type terminal (SP)
- Solid 2 x (0.25 … 1.5 mm²)
- Finely stranded
- Without end sleeves 2 x (0.5 … 1.5 mm²)
- With end sleeves 2 x (0.5 … 0.75 mm²)
- For AWG cables for auxiliary contacts 2 x (24 … 16)

Tightening torque
Screw terminal, spring-type terminal 0.8 … 0.9 Nm

Shock resistance
according to IEC 60068-2-27
Sinusoidal half-wave 50 g /11 ms

Vibration resistance
according to IEC 60068-2-6
2 … 500 Hz: 5 g

Electrical characteristics

Standards
The switches comply with the “Standards for low-voltage switching devices” EN IEC 60947-5-1

EAO reserves the right to alter specifications without further notice.

Electrical life
100 000 h

Insulation voltage
Rated value 320 V

Surge voltage resistance
Rated value 4 kV

Environmental conditions

Operating temperature
–25 °C … +70 °C

Storage temperature
–40 °C … +80 °C

Protection degree
Terminal IP20

Environmental category
during operation according to IEC 60721:
3K6, 3C3, 3S2, 3M6

Approvals

Approbations
CCC
CSA
UL

Declaration of conformity
CE

45 Marking

Inscription marking plates and legend plates

Labels can be inserted for identification pusposes in illuminated pushbuttons and pushbuttons with a flat lens. This marking plates are made of translucent plastic with a black inscription, which can be fitted in any 90° angle.

Standard texts for marking plates

Example	Start	Part No. 45-563.0K00.T00029

Standard texts German		Standard texts English	
Ein	Part No. 45-563.0K00.T00001	On	Part No. 45-563.0K00.T00020
Aus	Part No. 45-563.0K00.T00002	Off	Part No. 45-563.0K00.T00021
Auf	Part No. 45-563.0K00.T00003	Up	Part No. 45-563.0K00.T00022
Ab	Part No. 45-563.0K00.T00004	Down	Part No. 45-563.0K00.T00023
Vor	Part No. 45-563.0K00.T00005	Forward	Part No. 45-563.0K00.T00024
Zurück	Part No. 45-563.0K00.T00006	Right	Part No. 45-563.0K00.T00026
Rechts	Part No. 45-563.0K00.T00007	Left	Part No. 45-563.0K00.T00027
Links	Part No. 45-563.0K00.T00008	Stop	Part No. 45-563.0K00.T00028
Halt	Part No. 45-563.0K00.T00009	Start	Part No. 45-563.0K00.T00029
Zu	Part No. 45-563.0K00.T00010	Reset	Part No. 45-563.0K00.T00030
Schnell	Part No. 45-563.0K00.T00011	Test	Part No. 45-563.0K00.T00031
Langsam	Part No. 45-563.0K00.T00012	Open	Part No. 45-563.0K00.T00032
Betrieb	Part No. 45-563.0K00.T00013	Close	Part No. 45-563.0K00.T00033
Störung	Part No. 45-563.0K00.T00014	Running	Part No. 45-563.0K00.T00035
Einrichten	Part No. 45-563.0K00.T00018	Fast	Part No. 45-563.0K00.T00044
		Slow	Part No. 45-563.0K00.T00045

Symbols for marking plates

Graphic symbols are according to ISO 7000 or IEC 60417.

O Part No. 45-563.0K00.S00001	Part No. 45-563.0K00.S00012 Decrease, Minus	Part No. 45-563.0K00.S00023 Unlock
I Part No. 45-563.0K00.S00002	Part No. 45-563.0K00.S00013 Electric motor	Part No. 45-563.0K00.S00024 Setting
II Part No. 45-563.0K00.S00003	Part No. 45-563.0K00.S00014 Horn	Part No. 45-563.0K00.S00025 On-Off momentary contact type
III Part No. 45-563.0K00.S00004	Part No. 45-563.0K00.S00015 Water tap	Part No. 45-563.0K00.S00026 Manual operating
Part No. 45-563.0K00.S00005 Arrow direction to right	Part No. 45-563.0K00.S00016 Pump	Part No. 45-563.0K00.S00027 Automatic cycle
Part No. 45-563.0K00.S00006 Arrow direction up	Part No. 45-563.0K00.S00017 Coolant pump	Part No. 45-563.0K00.S00028 Suction
Part No. 45-563.0K00.S00007 Clockwise rotation	Part No. 45-563.0K00.S00018 Lock, tighten	Part No. 45-563.0K00.S00029 Blowing
Part No. 45-563.0K00.S00008 Counterclockwise rotation	Part No. 45-563.0K00.S00019 Unlock, unclamp	
Part No. 45-563.0K00.S00009 Rapid traverse	Part No. 45-563.0K00.S00020 Brake	
Part No. 45-563.0K00.S00010 Feed	Part No. 45-563.0K00.S00021 Release brake	
Part No. 45-563.0K00.S00011 Increase, Plus	Part No. 45-563.0K00.S00022 Interlock	

Customized inscription for marking plates

All dimensions in mm

Height of letters	Number of lines	Number of letters per line (target value)		
h		b1	b2	b3
4	1	10	–	–
3	2	–	8	–
	3	10	–	6

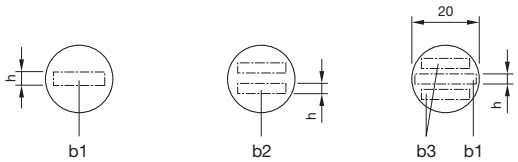

The gap between two words results in each case a letter less.

Standard texts for legend plates black, 27 x 12.5 mm

Example	Reset	Part No. 45-573.1102.T00030

Standard texts German		Standard texts English		Standard texts French	
Ein	Part No. 45-573.1102.T00001	On	Part No. 45-573.1102.T00020	Marche	Part No. 45-573.1102.T00048
Aus	Part No. 45-573.1102.T00002	Off	Part No. 45-573.1102.T00021	Arrêt	Part No. 45-573.1102.T00049
Auf	Part No. 45-573.1102.T00003	Up	Part No. 45-573.1102.T00022	Montée	Part No. 45-573.1102.T00050
Ab	Part No. 45-573.1102.T00004	Down	Part No. 45-573.1102.T00023	Descente	Part No. 45-573.1102.T00051
Vor	Part No. 45-573.1102.T00005	Forward	Part No. 45-573.1102.T00024	Avant	Part No. 45-573.1102.T00052
Zurück	Part No. 45-573.1102.T00006	Reverse	Part No. 45-573.1102.T00025	Retour	Part No. 45-573.1102.T00053
Rechts	Part No. 45-573.1102.T00007	Right	Part No. 45-573.1102.T00026	Droite	Part No. 45-573.1102.T00054
Links	Part No. 45-573.1102.T00008	Left	Part No. 45-573.1102.T00027	Gauche	Part No. 45-573.1102.T00055
Halt	Part No. 45-573.1102.T00009	Stop	Part No. 45-573.1102.T00028	Ouvert	Part No. 45-573.1102.T00056
Zu	Part No. 45-573.1102.T00010	Start	Part No. 45-573.1102.T00029	Fermé	Part No. 45-573.1102.T00057
Betrieb	Part No. 45-573.1102.T00013	Reset	Part No. 45-573.1102.T00030	Rapide	Part No. 45-573.1102.T00058
Störung	Part No. 45-573.1102.T00014	Test	Part No. 45-573.1102.T00031	En Service	Part No. 45-573.1102.T00059
Hand Auto	Part No. 45-573.1102.T00015	Open	Part No. 45-573.1102.T00032	Defaut	Part No. 45-573.1102.T00060
Hand O Auto	Part No. 45-573.1102.T00017	Close	Part No. 45-573.1102.T00033	Reglage	Part No. 45-573.1102.T00061
		Jog	Part No. 45-573.1102.T00034	Arrêt d`urgence	Part No. 45-573.1102.T00062
		Running	Part No. 45-573.1102.T00035	Hors service	Part No. 45-573.1102.T00063
		Fault	Part No. 45-573.1102.T00036	Sous tension	Part No. 45-573.1102.T00064
		Run	Part No. 45-573.1102.T00037	Manu Auto	Part No. 45-573.1102.T00065
		Stop Start	Part No. 45-573.1102.T00038	Marche Arrêt	Part No. 45-573.1102.T00066
		Off On	Part No. 45-573.1102.T00039	Rearmement	Part No. 45-573.1102.T00067
		Power off	Part No. 45-573.1102.T00040		
		Power on	Part No. 45-573.1102.T00041		
		Man O Auto	Part No. 45-573.1102.T00042		
		Man Auto	Part No. 45-573.1102.T00043		

Symbols for legend plates black, 27 x 12.5 mm

Graphic symbols are according to ISO 7000 or IEC 60417.

○	Part No. 45-573.1102.S00001	1 2	Part No. 45-573.1102.S00007
|	Part No. 45-573.1102.S00002	↖	Part No. 45-573.1102.S00009 Arrow/Direction up
○ |	Part No. 45-573.1102.S00005		

Standard texts for legend plates silver, 27 x 12.5 mm

Example	Reset	Part No. 45-573.1A02.T00030

Standard texts German		Standard texts English	
Ein	Part No. 45-573.1A02.T00001	On	Part No. 45-573.1A02.T00020
Aus	Part No. 45-573.1A02.T00002	Off	Part No. 45-573.1A02.T00021
Auf	Part No. 45-573.1A02.T00003	Up	Part No. 45-573.1A02.T00022
Ab	Part No. 45-573.1A02.T00004	Down	Part No. 45-573.1A02.T00023
Vor	Part No. 45-573.1A02.T00005	Stop	Part No. 45-573.1A02.T00028
Zurück	Part No. 45-573.1A02.T00006	Start	Part No. 45-573.1A02.T00029
Rechts	Part No. 45-573.1A02.T00007	Reset	Part No. 45-573.1A02.T00030
Links	Part No. 45-573.1A02.T00008	Test	Part No. 45-573.1A02.T00031
Halt	Part No. 45-573.1A02.T00009	Open	Part No. 45-573.1A02.T00032
Zu	Part No. 45-573.1A02.T00010	Close	Part No. 45-573.1A02.T00033
Schnell	Part No. 45-573.1A02.T00011	Man O Auto	Part No. 45-573.1A02.T00042
Langsam	Part No. 45-573.1A02.T00012	Man Auto	Part No. 45-573.1A02.T00043
Betrieb	Part No. 45-573.1A02.T00013	Running	Part No. 45-573.1A02.T00035
Störung	Part No. 45-573.1A02.T00014	Fault	Part No. 45-573.1A02.T00036
Hand Auto	Part No. 45-573.1A02.T00015	Fast	Part No. 45-573.1A02.T00044
Stop Start	Part No. 45-573.1A02.T00016	Slow	Part No. 45-573.1A02.T00045
Hand O Auto	Part No. 45-573.1A02.T00017		

Symbols for legend plates silver, 27 x 12.5 mm

Graphic symbols are according to ISO 7000 or IEC 60417.

○	Part No. 45-573.1A02.S00001	| ○ ||	Part No. 45-573.1A02.S00006
|	Part No. 45-573.1A02.S00002	1 ○ 2	Part No. 45-573.1A02.S00007
||	Part No. 45-573.1A02.S00003	→	Part No. 45-573.1A02.S00008 Arrow/Direction right
|||	Part No. 45-573.1A02.S00004	↖	Part No. 45-573.1A02.S00009 Arrow/Direction up
○ |	Part No. 45-573.1A02.S00005		

Standard texts for legend plates black, 27 x 17.5 mm

Example	Stop	Part No. 45-573.1103.T00028

Standard texts German		Standard texts English		Standard texts French	
Ein	Part No. 45-573.1103.T00001	On	Part No. 45-573.1103.T00020	Marche	Part No. 45-573.1103.T00048
Aus	Part No. 45-573.1103.T00002	Off	Part No. 45-573.1103.T00021	Arrêt	Part No. 45-573.1103.T00049
Auf	Part No. 45-573.1103.T00003	Up	Part No. 45-573.1103.T00022	Droite	Part No. 45-573.1103.T00054
Ab	Part No. 45-573.1103.T00004	Down	Part No. 45-573.1103.T00023	Gauche	Part No. 45-573.1103.T00055
Vor	Part No. 45-573.1103.T00005	Forward	Part No. 45-573.1103.T00024	En Service	Part No. 45-573.1103.T00059
Zurück	Part No. 45-573.1103.T00006	Reverse	Part No. 45-573.1103.T00025	Defaut	Part No. 45-573.1103.T00060
Halt	Part No. 45-573.1103.T00009	Right	Part No. 45-573.1103.T00026	Sous tension	Part No. 45-573.1103.T00064
Zu	Part No. 45-573.1103.T00010	Stop	Part No. 45-573.1103.T00028	Manu Auto	Part No. 45-573.1103.T00065
Betrieb	Part No. 45-573.1103.T00011	Start	Part No. 45-573.1103.T00029	Marche Arrêt	Part No. 45-573.1103.T00066
Störung	Part No. 45-573.1103.T00014	Open	Part No. 45-573.1103.T00032	Rearmement	Part No. 45-573.0K00.T00067
Hand Auto	Part No. 45-573.1103.T00015	Close	Part No. 45-573.1103.T00033		
		Running	Part No. 45-573.1103.T00035		
		Fault	Part No. 45-573.1103.T00036		
		Stop Start	Part No. 45-573.1103.T00038		
		Man Auto	Part No. 45-573.1103.T00043		

Symbols for legend plates black, 27 x 12.5 mm

Graphic symbols are according to ISO 7000 or IEC 60417.

	Part No. 45-573.1103.S00001		Part No. 45-573.1103.S00008 Arrow/Direction right
	Part No. 45-573.1103.S00002		Part No. 45-573.1103.S00009 Arrow/Direction up
	Part No. 45-573.1103.S00005		

Standard texts for legend plates silver, 27 x 17.5 mm

Example	Stop	Part No. 45-573.1A03.T00028

Standard texts German		Standard texts English	
Ein	Part No. 45-573.1A03.T00001	On	Part No. 45-573.1A03.T00020
Aus	Part No. 45-573.1A03.T00002	Off	Part No. 45-573.1A03.T00021
Auf	Part No. 45-573.1A03.T00003	Stop	Part No. 45-573.1A03.T00028
Ab	Part No. 45-573.1A03.T00004	Start	Part No. 45-573.1A03.T00029
Vor	Part No. 45-573.1A03.T00005	Reset	Part No. 45-573.1A03.T00030
Zurück	Part No. 45-573.1A03.T00006	Fault	Part No. 45-573.1A03.T00036
Rechts	Part No. 45-573.1A03.T00007	Man O Auto	Part No. 45-573.1A03.T00043
Halt	Part No. 45-573.1A03.T00009		
Zu	Part No. 45-573.1A03.T00010		
Betrieb	Part No. 45-573.1A03.T00013		
Störung	Part No. 45-573.1A03.T00014		
Hand Auto	Part No. 45-573.1A03.T00015		
Hand O Auto	Part No. 45-573.1A03.T00017		

Symbols for legend plates silver, 27 x 17.5 mm

Graphic symbols are according to ISO 7000 or IEC 60417.

○	Part No. 45-573.1A02.S00001	1 ○ 2	Part No. 45-573.1A02.S00007
|	Part No. 45-573.1A02.S00002	→	Part No. 45-573.1A02.S00008 Arrow/Direction right
○ |	Part No. 45-573.1A02.S00005	↖	Part No. 45-573.1A02.S00009 Arrow/Direction up

Standard texts for legend plates black, 27 x 27 mm

Example	**Stop**	Part No. 45-573.1103.T00028

Standard texts German		Standard texts English		Standard texts French	
Ein	Part No. 45-573.1105.T00001	On	Part No. 45-573.1105.T00020	Marche	Part No. 45-573.1105.T00048
Aus	Part No. 45-573.1105.T00002	Off	Part No. 45-573.1105.T00021	Arrêt	Part No. 45-573.1105.T00049
Auf	Part No. 45-573.1105.T00003	Up	Part No. 45-573.1105.T00022	Montée	Part No. 45-573.1105.T00050
Ab	Part No. 45-573.1105.T00004	Down	Part No. 45-573.1105.T00023	Descente	Part No. 45-573.1105.T00051
Vor	Part No. 45-573.1105.T00005	Forward	Part No. 45-573.1105.T00024	En Service	Part No. 45-573.1105.T00059
Zurück	Part No. 45-573.1105.T00006	Reverse	Part No. 45-573.1105.T00025	Defaut	Part No. 45-573.1105.T00060
Rechts	Part No. 45-573.1105.T00007	Stop	Part No. 45-573.1105.T00028	Sous tension	Part No. 45-573.1105.T00064
Links	Part No. 45-573.1105.T00008	Start	Part No. 45-573.1105.T00029	Manu Auto	Part No. 45-573.1105.T00065
Halt	Part No. 45-573.1105.T00009	Stop Start	Part No. 45-573.1105.T00038	Marche Arrêt	Part No. 45-573.1105.T00066
Zu	Part No. 45-573.1105.T00010	EMERGENCY STOP	Part No. 45-573.1105.T00046		
Betrieb	Part No. 45-573.1105.T00013				
Störung	Part No. 45-573.1105.T00014				
Hand Auto	Part No. 45-573.1105.T00015				

Symbols for legend plates black, 27 x 27 mm

Graphic symbols are according to ISO 7000 or IEC 60417.

	Part No. 45-573.1105.S00003		Part No. 45-573.1105.S00008 Arrow/Direction right

Customized inscription for legend plates

All dimensionen in mm

Size of legend plates	Height of letters	Number of lines
27 x 12.5	4	1
	3.5	2
	2.5	3
27 x 17.5	4	1 – 2
	3	3
27 x 27	4	1 – 5

Up to 11 characters per line are possible.

Suppressor circuits

When switching inductive loads such as relays, DC motors, and DC solenoids, it is always important to absorb surges (e.g. with a diode) to protect the contacts. When these inductive loads are switched off, a counter emf can severely damage switch contacts and greatly shorten lifetime.

Fig. 1 shows an inductive load with a free-wheeling diode connected in parallel. This free-wheeling diode provides a path for the inductor current to flow when the current is interrupted by the switch. Without this free-wheeling diode, the voltage across the coil will be limited only by dielectric breakdown voltages of the circuit or parasitic elements of the coil. This voltage can be kilovolts in amplitude even when nominal circuit voltages are low (e.g. 12 VDC) see Fig. 2.

The free-wheeling diode should be chosen so that the reverse breakdown voltage is greater than the voltage driving the inductive load. The DC blocking voltage (VR) of the free-wheeling diode can be found in the datasheet of a diode. The forward current should be equal or greater than the maximum current flowing through the load.

To get an efficient protection, the free-wheeling diode must be connected as close as possible to the inductive load!

Switching with inductive load
Fig. 1

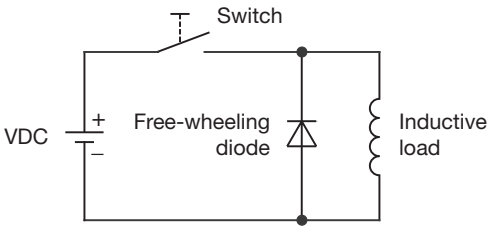

Counter EMF
over load without free-wheeling diode
Fig. 2

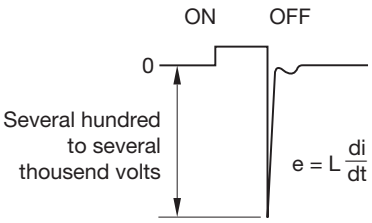

45 Index

Index from Part No.

Part No.	Page
45-2131.1110.000	39
45-2131.1120.000	39
45-2131.1140.000	39
45-2131.1150.000	39
45-2131.1160.000	39
45-2131.1180.000	39
45-2131.1190.000	39
45-2131.11K0.000	39
45-2131.1210.000	43
45-2131.1220.000	43
45-2131.1240.000	43
45-2131.1250.000	44
45-2131.1260.000	44
45-2131.1290.000	44
45-2131.1310.000	45
45-2131.1320.000	45
45-2131.1340.000	46
45-2131.1350.000	46
45-2131.1360.000	46
45-2131.1390.000	46
45-2131.1410.000	47
45-2131.1420.000	47
45-2131.1440.000	48
45-2131.1450.000	48
45-2131.1460.000	48
45-2131.1490.000	48
45-2131.2110.000	42
45-2131.2120.000	42
45-2131.2140.000	42
45-2131.2150.000	42
45-2131.2160.000	42
45-2131.2180.000	42
45-2131.2190.000	42
45-2131.21K0.000	42
45-2131.2210.000	45
45-2131.2220.000	45
45-2131.2240.000	45
45-2131.2250.000	45
45-2131.2260.000	45
45-2131.2290.000	45
45-2131.2310.000	47
45-2131.2320.000	47
45-2131.2340.000	47
45-2131.2350.000	47
45-2131.2360.000	47
45-2131.2390.000	47
45-2131.3110.000	40
45-2131.3120.000	40
45-2131.3140.000	40
45-2131.3150.000	40
45-2131.3160.000	41
45-2131.3180.000	41
45-2131.3190.000	41
45-2131.31K0.000	41
45-2131.3210.000	44
45-2131.3220.000	44
45-2131.3240.000	44
45-2131.3250.000	44
45-2131.3260.000	44
45-2131.3290.000	44
45-2131.3310.000	46
45-2131.3320.000	46
45-2131.3340.000	46
45-2131.3350.000	46
45-2131.3360.000	46
45-2131.3390.000	47
45-2131.4F10.000	21
45-2131.4F20.000	21
45-2131.4F40.000	21
45-2131.4F50.000	21
45-2131.4F60.000	21
45-2131.4F90.000	22
45-2134.1110.000	39
45-2134.1120.000	40
45-2134.1140.000	40
45-2134.1150.000	40
45-2134.1160.000	40
45-2134.1190.000	40
45-2134.2110.000	43
45-2134.2120.000	43
45-2134.2140.000	43
45-2134.2150.000	43
45-2134.2160.000	43
45-2134.2190.000	43
45-2134.2220.000	45
45-2134.3110.000	41
45-2134.3120.000	41
45-2134.3140.000	41
45-2134.3150.000	41
45-2134.3160.000	41
45-2134.3190.000	42
45-2134.4F10.000	22
45-2134.4F20.000	22
45-2134.4F40.000	22
45-2134.4F50.000	22
45-2134.4F60.000	22
45-2134.4F90.000	22
45-2231.11E0.000	51
45-2231.11F0.000	51
45-2231.11G0.000	52
45-2231.11H0.000	52
45-2231.11J0.000	52
45-2231.11K0.000	52
45-2231.11N0.000	52
45-2231.12E0.000	56
45-2231.12G0.000	56
45-2231.12H0.000	56
45-2231.12J0.000	56
45-2231.12K0.000	56
45-2231.14J0.000	58
45-2231.21E0.000	54
45-2231.21F0.000	54
45-2231.21G0.000	54
45-2231.21H0.000	55
45-2231.21J0.000	55
45-2231.21K0.000	55
45-2231.21N0.000	55
45-2231.22E0.000	57
45-2231.22F0.000	57
45-2231.22G0.000	57
45-2231.22H0.000	57
45-2231.22J0.000	57
45-2231.22K0.000	57
45-2231.22N0.000	58
45-2231.31E0.000	53
45-2231.31F0.000	53
45-2231.31G0.000	53
45-2231.31H0.000	53
45-2231.31J0.000	53
45-2231.31K0.000	53
45-2231.31N0.000	53
45-2231.32E0.000	56
45-2231.32G0.000	56
45-2231.32H0.000	56
45-2231.32J0.000	57
45-2231.32K0.000	57
45-2231.4FE0.000	23
45-2231.4FG0.000	23
45-2231.4FH0.000	23
45-2231.4FJ0.000	23
45-2231.4FK0.000	23
45-2234.11E0.000	52
45-2234.11G0.000	52
45-2234.11H0.000	52
45-2234.11J0.000	52
45-2234.11K0.000	53
45-2234.11N0.000	53
45-2234.21E0.000	55
45-2234.21G0.000	55
45-2234.21H0.000	55
45-2234.21J0.000	55
45-2234.21K0.000	56
45-2234.21N0.000	55
45-2234.31E0.000	54
45-2234.31G0.000	54
45-2234.31H0.000	54
45-2234.31J0.000	54
45-2234.31K0.000	54
45-2234.31N0.000	54
45-2234.4FE0.000	24
45-2234.4FG0.000	24
45-2234.4FH0.000	24
45-2234.4FJ0.000	24
45-2234.4FK0.000	24
45-2300.1000.000	130
45-2300.2000.000	130
45-2400.1000.000	131
45-2400.2000.000	131
45-2530.1810.000	65
45-2530.1820.000	65
45-2530.1840.000	65
45-2530.1910.000	68
45-2530.1920.000	68
45-2530.1940.000	68
45-2530.1950.000	68
45-2530.1A10.000	72
45-2530.1A20.000	72
45-2530.2810.000	66
45-2530.2820.000	67
45-2530.2910.000	70
45-2530.2920.000	70
45-2530.2940.000	70
45-2530.2A10.000	73
45-2530.2A20.000	73
45-2530.3810.000	66
45-2530.3820.000	66
45-2530.3910.000	69
45-2530.3920.000	69
45-2531.1810.000	65
45-2531.1820.000	65
45-2531.1840.000	66
45-2531.1850.000	66
45-2531.1910.000	69
45-2531.1920.000	69
45-2531.1940.000	69
45-2531.1950.000	69
45-2531.1A10.000	72
45-2531.1A20.000	72
45-2531.1A40.000	73
45-2531.1A50.000	73
45-2531.2810.000	67
45-2531.2820.000	67
45-2531.2840.000	67
45-2531.2850.000	67
45-2531.2910.000	70
45-2531.2920.000	70
45-2531.2940.000	70
45-2531.2950.000	70
45-2531.2A10.000	73
45-2531.2A20.000	73
45-2531.2A40.000	73
45-2531.2A50.000	73
45-2531.3810.000	66
45-2531.3820.000	66
45-2531.3840.000	66
45-2531.3850.000	66
45-2531.3910.000	69
45-2531.3920.000	69
45-2531.3940.000	69
45-2531.3950.000	70
45-2532.2910.000	70
45-2532.2920.000	71
45-2533.2910.000	71
45-2533.2920.000	71
45-2630.18E0.000	74
45-2630.18G0.000	74
45-2630.18H0.000	74
45-2630.18J0.000	74
45-2630.18K0.000	74
45-2630.19E0.000	78
45-2630.19G0.000	78
45-2630.19H0.000	78
45-2630.19J0.000	78
45-2630.19K0.000	79
45-2630.28E0.000	76
45-2630.28F0.000	76
45-2630.28G0.000	76
45-2630.28H0.000	76
45-2630.28J0.000	76
45-2630.28K0.000	76
45-2630.29E0.000	80
45-2630.29F0.000	80
45-2630.29G0.000	80
45-2630.29H0.000	80
45-2630.29J0.000	80
45-2630.29K0.000	80
45-2630.2AE0.000	82
45-2630.2AG0.000	82
45-2630.2AH0.000	82
45-2630.2AJ0.000	83
45-2630.2AK0.000	83
45-2630.38E0.000	75
45-2630.38G0.000	75
45-2630.39E0.000	79
45-2630.39G0.000	79
45-2631.18E0.000	75
45-2631.18G0.000	75
45-2631.18H0.000	75
45-2631.18J0.000	75
45-2631.18K0.000	75
45-2631.18N0.000	75
45-2631.19G0.000	79
45-2631.19H0.000	79
45-2631.19K0.000	79
45-2631.19N0.000	79
45-2631.28G0.000	77
45-2631.28H0.000	77
45-2631.28N0.000	77
45-2631.29F0.000	80
45-2631.29G0.000	81
45-2631.29H0.000	81
45-2631.29N0.000	81
45-2631.2AF0.000	83
45-2631.2AG0.000	83
45-2631.2AH0.000	83
45-2631.2AN0.000	83
45-2631.38G0.000	75
45-2631.38H0.000	76
45-2631.38K0.000	76
45-2631.38N0.000	76
45-2631.39G0.000	79
45-2631.39H0.000	79
45-2631.39K0.000	80
45-2631.39N0.000	80
45-2632.29E0.000	81
45-2632.29H0.000	81
45-2633.29E0.000	81
45-2633.29N0.000	81
45-2729.1010.000	64
45-2729.1020.000	64
45-2736.1910.000	63
45-2736.1960.000	63
45-280S.1C20.003	98
45-280S.1C40.003	98
45-280S.1C50.003	98
45-280S.1C60.003	98
45-280S.1C90.003	98
45-280S.2C20.003	102
45-280S.2C30.003	102
45-280S.2C40.003	102
45-280S.2C50.003	102
45-280S.2C60.003	102
45-280S.2C90.003	102
45-280S.2D20.003	104
45-280S.2D50.003	105
45-280S.2D90.003	105
45-280S.3C20.003	100
45-280S.3C40.003	100
45-280S.3C50.003	100
45-280S.3C60.003	100
45-280S.3C90.003	100
45-280S.4C20.003	30
45-280S.4C50.003	31
45-280S.4C90.003	31
45-280S.4D20.003	32
45-280S.4D50.003	33
45-280S.4D90.003	33
45-280X.1C20.003	99
45-280X.1C40.003	99
45-280X.1C50.003	99
45-280X.1C60.003	99
45-280X.1C90.003	99
45-280X.2C90.003	102
45-280X.2D20.003	105
45-280X.2D90.003	105
45-280X.3C20.003	101
45-280X.3C40.003	101
45-280X.3C50.003	101
45-280X.3C60.003	101
45-280X.3C90.003	101
45-2816.1C20.003	98
45-2816.1C40.003	98
45-2816.1C50.003	98
45-2816.1C60.003	98
45-2816.1C90.003	99
45-2816.2C20.003	102
45-2816.2C50.003	102
45-2816.2C90.003	102
45-2816.2D20.003	105
45-2816.2D90.003	105
45-2816.3C20.003	100
45-2816.3C40.003	100
45-2816.3C50.003	100
45-2816.3C60.003	100
45-2816.3C90.003	101
45-2819.1C20.003	97
45-2819.1C40.003	97
45-2819.1C50.003	97
45-2819.1C60.003	97
45-2819.1C90.003	98
45-2819.2C20.003	101
45-2819.2C40.003	101
45-2819.2C50.003	101
45-2819.2C90.003	101
45-2819.2D20.003	104
45-2819.2D50.003	104
45-2819.2D90.003	104
45-2819.3C20.003	99
45-2819.3C40.003	99
45-2819.3C50.003	99
45-2819.3C60.003	99
45-2819.3C90.003	100
45-2819.4C20.003	30
45-2819.4C50.003	30
45-2819.4C90.003	30
45-2819.4D20.003	32
45-2819.4D50.003	32
45-2819.4D90.003	32
45-2828.1C20.001	92
45-2828.1C40.001	92
45-2828.1C50.001	92
45-2828.1C60.001	92
45-2828.1C90.001	92
45-2828.1D20.001	94
45-2828.1D90.001	94
45-2828.1E20.001	88
45-2828.1E90.001	88
45-2828.2C20.001	93
45-2828.2C30.001	93
45-2828.2C50.001	93
45-2828.2C90.001	93
45-2828.2D20.001	95
45-2828.2D40.001	95
45-2828.2D50.001	95
45-2828.2D60.001	95
45-2828.2D90.001	95
45-2828.3C20.001	92
45-2828.3C40.001	92
45-2828.3C50.001	93
45-2828.3C60.001	93
45-2828.3C90.001	93
45-2828.3D20.001	94
45-2828.3D90.001	94
45-2828.3E20.001	88
45-2828.3E90.001	88
45-2828.4C20.001	26
45-2828.4C50.001	27
45-2828.4C90.001	27
45-2828.4D20.001	28
45-2828.4D50.001	29
45-2828.4D90.001	29
45-2844.1C20.006	90
45-2844.1C40.006	90
45-2844.1C50.006	90
45-2844.1C60.006	90
45-2844.1C90.006	91
45-2844.2C20.006	91
45-2844.2C40.006	91
45-2844.2C50.006	91
45-2844.2C60.006	92
45-2844.2C90.006	92
45-2844.2D40.006	95
45-2844.2D50.006	95
45-2844.2D60.006	95
45-2844.2D90.006	95
45-2844.3C20.006	91
45-2844.3C40.006	91
45-2844.3C50.006	91
45-2844.3C60.006	91
45-2844.3C90.006	91
45-2844.4C20.006	26
45-2844.4C50.006	26
45-2844.4C90.006	26
45-2844.4D20.006	28
45-2844.4D50.006	28
45-2844.4D90.006	28
45-2845.1E90.002	106
45-2845.2E90.002	106
45-2845.3E90.002	106
45-290A.1000.113	86
45-290A.2000.113	87
45-290C.1000.113	86
45-290C.2000.113	87
45-290C.3000.113	87
45-290D.1000.113	86
45-290D.2000.113	87
45-290D.3000.113	87
45-290E.1000.113	86
45-290E.2000.113	87
45-290F.1000.113	86
45-290F.2000.113	87
45-290F.3000.113	87
45-290F.4F00.113	25
45-290G.1000.113	86
45-290G.2000.113	87
45-290G.3000.113	87
45-290H.1000.111	84
45-290H.2000.111	85
45-290H.3000.111	84
45-290H.4F00.111	25
45-290J.1000.111	84
45-290J.2000.111	85
45-290J.3000.111	84
45-290J.4F00.111	25
45-290J.4F00.116	25
45-290K.1000.116	84
45-290K.2000.116	85
45-290K.3000.116	84
45-290W.1000.113	86
45-290Z.1000.113	86
45-290Z.2000.113	87
45-290Z.3000.113	87

Part No.	Page
45-2910.1000.113	86
45-2910.2000.113	87
45-2911.1000.113	86
45-2911.2000.113	87
45-2911.3000.113	87
45-2917.1000.113	86
45-2917.2000.113	87
45-2917.3000.113	87
45-2922.1000.113	86
45-2922.2000.113	87
45-2922.3000.113	87
45-2924.1000.113	86
45-2924.2000.113	87
45-2924.3000.113	87
45-2925.1000.111	84
45-2925.2000.111	85
45-2925.3000.111	84
45-2C35.1920.110	62
45-2C36.1820.000	61
45-2C36.1920.000	62
45-2C36.1A20.000	62
45-2C37.1920.000	62
45-2D36.1820.000	61
45-2D36.1920.000	62
45-2D36.1A20.000	62
45-2D36.2820.000	62
45-2F0T.1010.000	110
45-2F0T.2010.000	110
45-2F0T.3010.000	110
45-2F0V.1010.000	110
45-2F0V.2010.000	110
45-2F0V.3010.000	110
45-2F13.1010.000	109
45-2F13.2010.000	109
45-2F13.3010.000	109
45-2F14.1010.000	109
45-2F14.2010.000	109
45-2F14.3010.000	109
45-2F38.1010.000	110
45-2F38.2010.000	110
45-2F38.3010.000	110
45-2F40.1010.000	109
45-2F40.2010.000	109
45-2F40.3010.000	109
45-2J31.15T0.000	49
45-2J31.15V0.000	50
45-2J31.16T0.000	49
45-2J31.16V0.000	49
45-2J31.25T0.000	50
45-2J31.25V0.000	50
45-2J31.26T0.000	50
45-2J31.26V0.000	50
45-2J31.35T0.000	50
45-2J31.36T0.000	50
45-2J31.36V0.000	50
45-2K31.15T0.000	59
45-2K31.15V0.000	60
45-2K31.16T0.000	59
45-2K31.16V0.000	59
45-2K31.35T0.000	60
45-2K31.35V0.000	60
45-2K31.36T0.000	60
45-2K31.36V0.000	60
45-2N39.1010.000	111
45-2N39.2010.000	111
45-2N39.3010.000	111
45-2N42.1010.000	111
45-2N42.2010.000	111
45-2N42.3010.000	111
45-2P01.1E10.000	107
45-2P01.2E10.000	107
45-2P02.1E10.000	107
45-2P02.2E10.000	107
45-2P03.1E10.000	107
45-2P03.2E10.000	107
45-2P04.1E10.000	107
45-2P04.2E10.000	107
45-2P05.1E10.000	107
45-2P05.2E10.000	107
45-2P06.1E10.000	107
45-2P06.2E10.000	107
45-2T00.10E0.000	34
45-2T00.10F0.000	34
45-2T00.10G0.000	34
45-2T00.10H0.000	34
45-2T00.10J0.000	34
45-2T00.10K0.000	35
45-2T00.10N0.000	35
45-2T00.20E0.000	35
45-2T00.20F0.000	35
45-2T00.20G0.000	35
45-2T00.20H0.000	35
45-2T00.20J0.000	35
45-2T00.20K0.000	35
45-2T00.20N0.000	35
45-2T07.10E0.000	36
45-2T07.10G0.000	36
45-2T07.10H0.000	36
45-2T07.10J0.000	36
45-2T07.10K0.000	36
45-2T07.30E0.000	37
45-2T07.30G0.000	37
45-2T07.30H0.000	37
45-2T07.30J0.000	37
45-2T07.30K0.000	37
45-2T07.4FE0.000	20
45-2T07.4FG0.000	20
45-2T07.4FH0.000	20
45-2T07.4FJ0.000	20
45-2T07.4FK0.000	20
45-311.1Z10	132
45-311.1Z40	132
45-311.2Z10	133
45-311.2Z40	133
45-312.1Z10	132
45-312.1Z40	132
45-312.2Z10	133
45-312.2Z40	133
45-320.1E11	134
45-320.1E12	134
45-320.1E16	134
45-320.1E17	134
45-320.1E18	135
45-320.1E41	135
45-320.1E42	135
45-320.1E46	135
45-320.1E47	135
45-320.1E48	135
45-320.1F11	134
45-320.1F12	134
45-320.1F16	134
45-320.1F17	134
45-320.1F18	135
45-320.1F41	135
45-320.1F42	135
45-320.1F46	135
45-320.1F47	135
45-320.1F48	135
45-320.1G11	134
45-320.1G12	134
45-320.1G16	134
45-320.1G17	134
45-320.1G18	135
45-320.1G41	135
45-320.1G42	135
45-320.1G46	135
45-320.1G47	135
45-320.1G48	135
45-320.1H11	134
45-320.1H12	134
45-320.1H16	134
45-320.1H17	134
45-320.1H18	135
45-320.1H41	135
45-320.1H42	135
45-320.1H46	135
45-320.1H47	135
45-320.1H48	135
45-320.1J11	134
45-320.1J12	134
45-320.1J16	134
45-320.1J17	134
45-320.1J18	135
45-320.1J41	135
45-320.1J42	135
45-320.1J46	135
45-320.1J47	135
45-320.1J48	135
45-320.1N11	134
45-320.1N12	134
45-320.1N16	134
45-320.1N17	134
45-320.1N18	135
45-320.1N41	135
45-320.1N42	135
45-320.1N46	135
45-320.1N47	135
45-320.1N48	135
45-320.2E11	136
45-320.2E12	136
45-320.2E16	136
45-320.2E17	136
45-320.2E18	137
45-320.2E41	137
45-320.2E42	137
45-320.2E46	137
45-320.2E47	137
45-320.2E48	137
45-320.2F11	136
45-320.2F12	136
45-320.2F16	136
45-320.2F17	136
45-320.2F18	137
45-320.2F41	137
45-320.2F42	137
45-320.2F46	137
45-320.2F47	137
45-320.2F48	137
45-320.2G11	136
45-320.2G12	136
45-320.2G16	136
45-320.2G17	136
45-320.2G18	137
45-320.2G41	137
45-320.2G42	137
45-320.2G46	137
45-320.2G47	137
45-320.2G48	137
45-320.2H11	136
45-320.2H12	136
45-320.2H16	136
45-320.2H17	136
45-320.2H18	137
45-320.2H41	137
45-320.2H42	137
45-320.2H46	137
45-320.2H47	137
45-320.2H48	137
45-320.2J11	136
45-320.2J12	136
45-320.2J16	136
45-320.2J17	136
45-320.2J18	137
45-320.2J41	137
45-320.2J42	137
45-320.2J46	137
45-320.2J47	137
45-320.2J48	137
45-320.2N11	136
45-320.2N12	136
45-320.2N16	136
45-320.2N17	136
45-320.2N18	137
45-320.2N41	137
45-320.2N42	137
45-320.2N46	137
45-320.2N47	137
45-320.2N48	137
45-320.3E60	138
45-320.3F60	138
45-320.3G60	138
45-320.3H60	138
45-320.3J60	138
45-320.3N60	138
45-330.1115	139
45-330.2115	139
45-410.1401	141
45-410.2403	141
45-420.1401	141
45-420.2803	141
45-430.1801	141
45-430.2803	141
45-440.1801	142
45-440.2803	142
45-450.1801	142
45-450.2803	142
45-460.1802	142
45-460.2804	142
45-470.1802	142
45-470.2804	142
45-506.1100	127
45-506.2A00	127
45-506.3A00	127
45-507.1100	142
45-509.1100	142
45-50C.1900	143
45-50C.2900	143
45-50D.1900	143
45-50D.2900	143
45-50E.1900	143
45-50E.2900	143
45-50F.1100	123
45-50G.0900	143
45-50J.1400	117
45-50J.140P	117
45-50J.140Q	117
45-50J.140S	117
45-50J.140T	117
45-50J.140V	117
45-50J.140W	117
45-50J.140X	118
45-50J.140Z	118
45-50K.1407	117
45-50K.1408	117
45-50M.1900	140
45-50N.1100	126
45-50P.0100	126
45-50Q.2100	126
45-522.0900	129
45-523.1900	140
45-529.2100	124
45-530.2100	128
45-531.2100	128
45-532.2100	128
45-533.2100	128
45-534.2100	128
45-535.2100	128
45-536.2100	128
45-537.2100	128
45-538.1100	118
45-539.2400	125
45-539.2800	125
45-542.1K00	123
45-543.1K00	123
45-544.1K00	123
45-545.1K00	123
45-546.1K00	123
45-547.1K00	123
45-548.1K00	123
45-549.1400	125
45-549.1800	125
45-550.1400	125
45-552.0100	113
45-552.0200	114
45-552.0400	114
45-552.0500	114
45-552.0E00	114
45-552.0G00	114
45-552.0H00	114
45-552.0J00	114
45-552.0K00	114
45-553.0100	112
45-553.0200	112
45-553.0400	112
45-553.0500	112
45-553.0600	112
45-553.0900	112
45-553.0E00	112
45-553.0F00	113
45-553.0G00	113
45-553.0H00	113
45-553.0J00	113
45-553.0K00	113
45-553.0N00	113
45-555.1100	122
45-555.1K00	122
45-558.0000	122
45-560.1100	127
45-561.1400	118
45-561.140P	118
45-562.1400	118
45-563.0K00	115
45-564.1102	119
45-564.1110	120
45-567.1103	119
45-567.1111	120
45-569.1105	119
45-569.1112	120
45-570.1105	120
45-571.1105	121
45-572.1105	121
45-573.1102	116
45-573.1103	116
45-573.1104	116
45-573.1105	116
45-573.1202	116
45-573.1A02	116
45-573.1A03	116
45-573.1A04	116
45-573.1A05	116

EAO Contact.
Your centre of excellence.

Headquarters

EAO Holding AG
Tannwaldstrasse 88
CH-4600 Olten
Telephone +41 62 286 91 11
info@eao.com

Manufacturing Companies

Switzerland
EAO AG
Tannwaldstrasse 88
CH-4600 Olten
Telephone +41 62 286 91 11
info@eao.com

EAO Systems AG
Tannwaldstrasse 88
CH-4600 Olten
Telephone +41 62 286 91 11
sales.esy@eao.com

China
EAO (Guangzhou) Ltd.
3/F, Block G4, South China
New Materials Innovation Park
31 Kefeng Road,
Guangzhou Science City,
CN-Guangzhou, PRC
Telephone +86 20 3229 0390
sales.ecn@eao.com

Germany
EAO Automotive GmbH & Co. KG
Richard-Wagner-Straße 3
DE-08209 Auerbach/Vogtland
Telephone +49 3744 8264 0
sales.esa@eao.com

North America
EAO Corporation
One Parrott Drive
Shelton
US-CT 06484
Telephone +1 203 951 4600
sales.eus@eao.com

Sales Companies

China
EAO (Guangzhou) Ltd.
3/F, Block G4, South China
New Materials Innovation Park
31 Kefeng Road,
Guangzhou Science City,
CN-Guangzhou, PRC
Telephone +86 20 3229 0390
sales.ecn@eao.com

EAO (Shanghai) Office
Rm. 403, Block 5#,
CIFI Century Square, Lane 28,
NO. 21, Danba Road,
Putuo District
CN-Shanghai PRC
Telephone +86 21 6095 0717
sales.ecn@eao.com

France
EAO France SAS
5, rue Henri François
FR-77330 Ozoir-la-Ferrière
Telephone +33 1 64 43 37 37
sales.efr@eao.com

Germany, Austria,
Poland, Czech Republic
EAO GmbH
Langenberger Straße 570
DE-45277 Essen
Telephone +49 201 8587 0
sales.ede@eao.com

Hong Kong (Asia Pacific)
EAO (Far East) Ltd.
Unit A1, 1/F, Block A
Tin On Industrial Building
777 Cheung Sha Wan Road
Lai Chi Kok, Kln
HK-Hong Kong
Telephone +852 27 86 91 41
sales.ehk@eao.com

Italy
EAO Italia S.r.l.
Centro Direzionale Summit –
Palazzo D1
Via Brescia, 28
IT-20063 Cernusco sul Naviglio (MI)
Telephone +39 02 92 471934
sales.eit@eao.com

Japan
EAO Japan Co. Ltd.
Net 1 Mita Bldg. 3F
3-1-4 Mita Minato-ku
JP-Tokyo 108-0073
Telephone +81 3 5444 5411
sales.ejp@eao.com

Netherlands, Belgium
EAO Benelux B.V.
Kamerlingh Onnesweg 46
NL-3316 GL Dordrecht
Telephone +31 78 653 17 00
sales.enl@eao.com

North America
EAO Corporation
One Parrott Drive
Shelton
US-CT 06484
Telephone +1 203 951 4600
sales.eus@eao.com

Sweden
EAO Svenska AB
Box 7032
SE-121 07 Stockholm-Globen
Telephone +46 8 683 86 60
sales.esw@eao.se

Switzerland
EAO Schweiz AG
Tannwaldstrasse 86
CH-4600 Olten
Telephone +41 62 286 95 00
sales.ech@eao.com

United Kingdom
EAO Ltd.
Highland House
Albert Drive
Burgess Hill
GB-West Sussex RH15 9TN
Telephone +44 1444 236 000
sales.euk@eao.com

EAO reserves the right to change specifications without further notice.

700.063.MC45.03/5.16

Общество с ограниченной ответственностью «МосЧип» ИНН 7719860671 / КПП 771901001
Адрес: 105318, г.Москва, ул.Щербаковская д.3, офис 1107

Данный компонент на территории Российской Федерации

Вы можете приобрести в компании MosChip.

Для оперативного оформления запроса Вам необходимо перейти по данной ссылке:

http://moschip.ru/get-element

Вы можете разместить у нас заказ для любого Вашего проекта, будь то серийное производство или разработка единичного прибора.

В нашем ассортименте представлены ведущие мировые производители активных и пассивных электронных компонентов.

Нашей специализацией является поставка электронной компонентной базы двойного назначения, продукции таких производителей как XILINX, Intel (ex.ALTERA), Vicor, Microchip, Texas Instruments, Analog Devices, Mini-Circuits, Amphenol, Glenair.

Сотрудничество с глобальными дистрибьюторами электронных компонентов, предоставляет возможность заказывать и получать с международных складов практически любой перечень компонентов в оптимальные для Вас сроки.

На всех этапах разработки и производства наши партнеры могут получить квалифицированную поддержку опытных инженеров.

Система менеджмента качества компании отвечает требованиям в соответствии с ГОСТ Р ИСО 9001, ГОСТ РВ 0015-002 и ЭС РД 009

Офис по работе с юридическими лицами:

105318, г.Москва, ул.Щербаковская д.3, офис 1107, 1118, ДЦ «Щербаковский»

Телефон: +7 495 668-12-70 (многоканальный)

Факс: +7 495 668-12-70 (доб.304)

E-mail: info@moschip.ru

Skype отдела продаж:
moschip.ru
moschip.ru_4
moschip.ru_6
moschip.ru_9