HALL-EFFECT SMART FAN MOTOR CONTROLLER

Description

The AH284 is a single-chip solution for driving two-coil brushless direct current (BLDC) fans and motors. The device includes a Hall-effect sensor, dynamic offset correction and two complementary open-drain output drivers with internal Zener diode protection.

To help protect the motor coils, the AH284 provides Rotor Lock Protection which shuts down output drives if rotor lock is detected. The device automatically re-starts when the rotor lock is removed.

The AH284 is available in SIP4 and SOT89-5L packages.

Pin Assignments

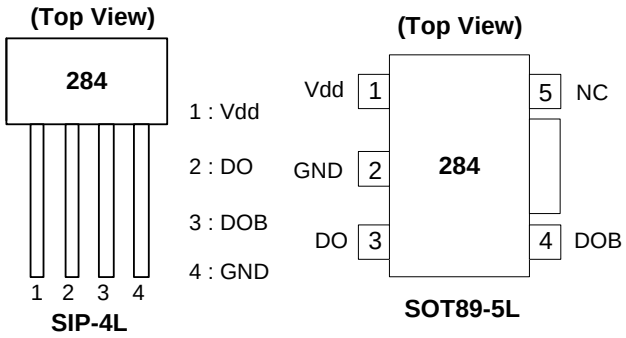

Features

- Single-chip solution
- Operating Voltage: 3.8V to 20V
- Built-in Hall sensor and input amplifier
- Rotor Lock Protection (Lock detection, output shutdown and automatic re-start)
- Built-in Zener protection for output driver
- Average output current up to 500mA
- Packages: SIP-4L and SOT89-5L
- Green Molding Compound

Applications

- Two-coil BLDC cooling fans
- Low to medium voltage, low power BLDC motors

Typical Application Circuit (Note 1)

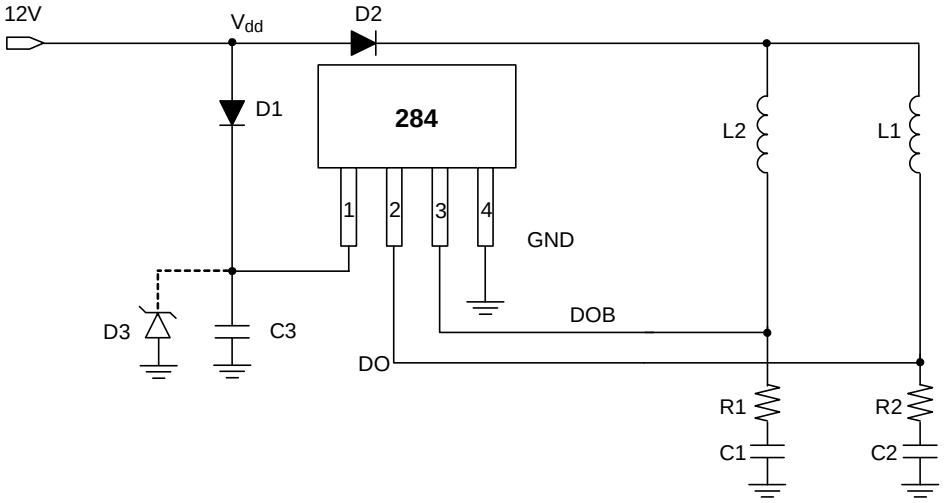

Notes: 1. Typically it is recommended to us a 56 Ohm resistor for R1 and R2 and a 2.2μF E-Cap capacitor for C1, C2 and C3. These values may need to be optimized depending on the coils used.
To help with IC protection it's advised to add a Zener diode between Vdd and ground. The Zener diode should be chosen to help prevent the supply voltage exceeding the maximum rating of the device.

© Diodes Incorporated

Pin Descriptions

Pin Name	Description
Vdd	Input Power
DO	Output Pin
DOB	Output Pin
GND	Ground
NC	Not Connected

Functional Block Diagram

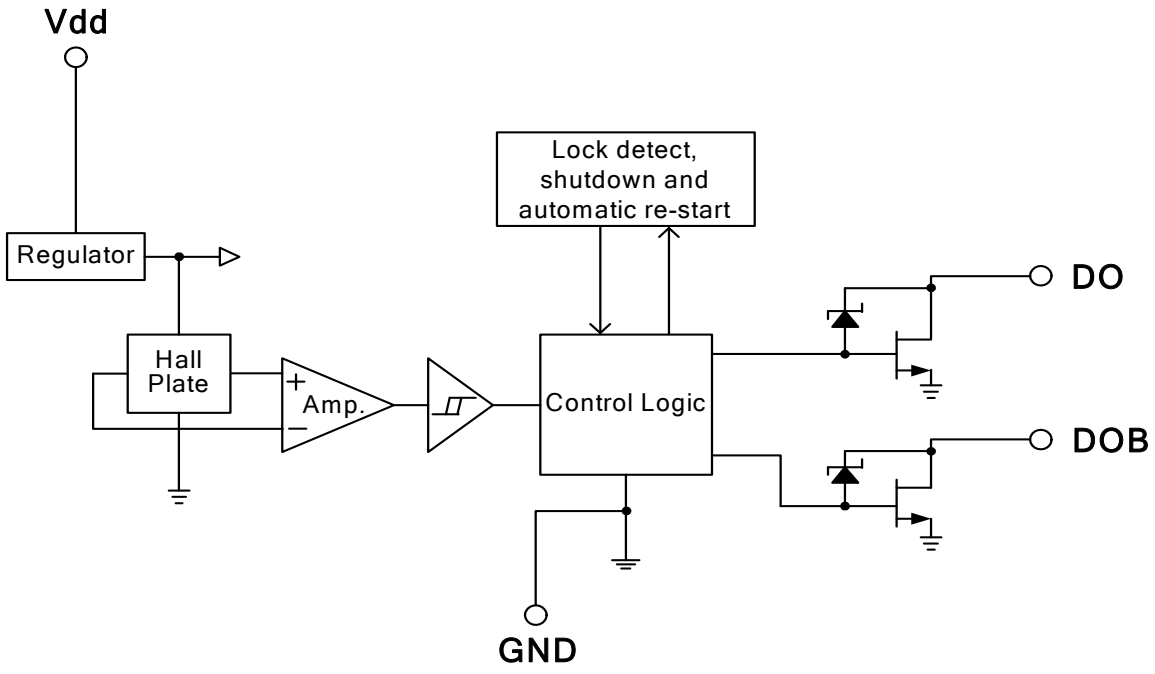

© Diodes Incorporated

Absolute Maximum Ratings (T_A = 25°C)

Symbol	Characteristics			Rating	Unit
Vdd	Supply Voltage			24	V
I_O	Output Current	$I_{O\ (AVE)}$	SIP-4L	500	mA
			SOT89-5L	500	mA
		$I_{O\ (PEAK)}$		700	mA
P_D	Power Dissipation	SIP-4L		550	mW
		SOT89-5L		800	mW
T_{ST}	Storage Temperature			-55 ~ 150	°C
T_J	Maximum Junction Temperature			150	°C
θ_{JA}	Thermal Resistance Junction to Case (Note 2)	SIP-4L		227	°C/W
		SOT89-5L		156	°C/W

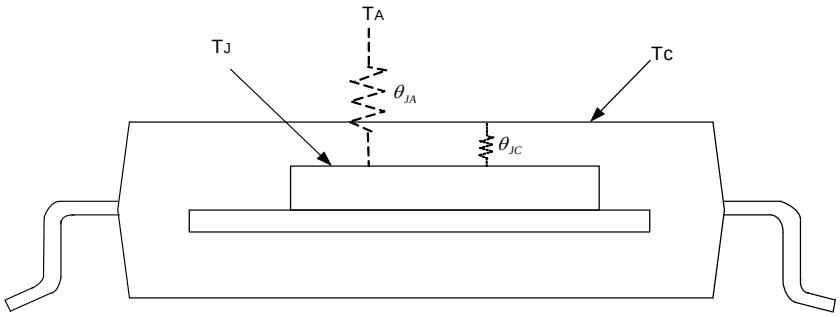

Notes: 2. θ_{JA} should be confirmed with heat sink thermal resistance. If there is no heat sink contact, θ_{JA} will almost be the same as θ_{JC}..

Recommended Operating Conditions

Symbol	Characteristic	Conditions	Min	Max	Unit
Vdd	Supply Voltage	Operating	3.8	20	V
T_A	Operating Ambient Temperature	Operating	-40	100	°C

© Diodes Incorporated

Electrical Characteristics (T_A = 25 °C, Vdd = 12V, unless otherwise specified)

Symbol	Characteristics	Conditions	Min	Typ.	Max	Unit
Idd	Supply Current	Operating	-	2.0	4.0	mA
I_{OFF}	Output Leakage Current	V_{OUT} = 24V	-	< 0.1	10	µA
T_{RLP-ON}	Rotor Lock Protection On Time		0.4	0.5	0.6	Sec
$T_{RLP-OFF}$	Rotor Lock Protection Off Time		2.4	3	3.6	Sec
$V_{OUT(SAT)}$	Output Saturation Voltage	I_O = 300mA	-	375	500	mV
		I_O = 500mA	-	625	900	
$R_{DS(ON)}$	Output On Resistance	I_O = 300mA	-	1.25	1.67	ohm
V_Z	Output Zener-Breakdown Voltage		35	42	60	V

Truth Table

IN-	IN+	CT	OUT1	OUT2	Mode
H	L	L	H	L	Rotating
L	H	L	L	H	Rotating
-	-	H	off	off	Lockup protection activated

Magnetic Characteristics (T_A = 25 °C, Vdd = 12V, unless otherwise specified, Note 3)

(1mT = 10 Gauss)

Symbol	Characteristics	Min	Typ.	Max	Unit
Bop	Operation Point	10	30	60	Gauss
Brp	Release Point	-60	-30	-10	Gauss
Bhy	Hysteresis	-	60	-	Gauss

Notes: 3. The magnetic characteristics may vary with supply voltage, operating temperature and after soldering.

© Diodes Incorporated

Operating Characteristics

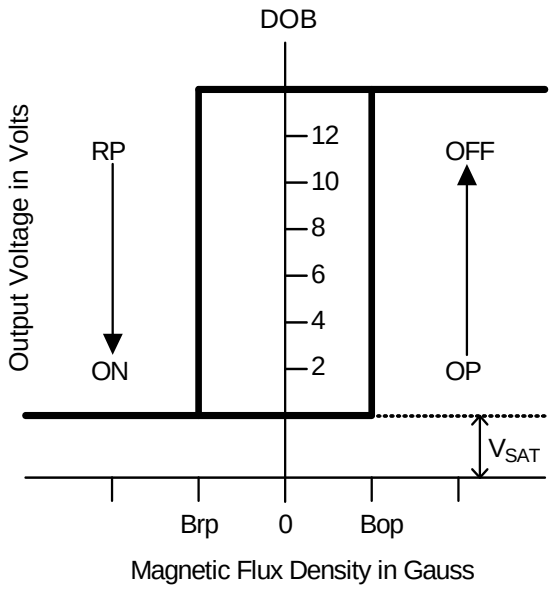

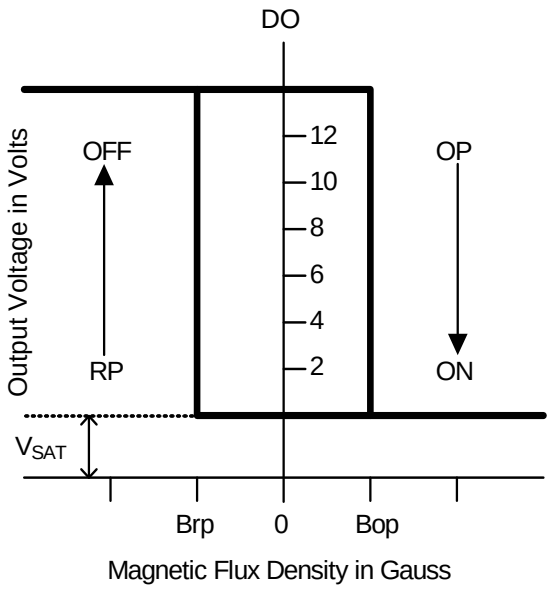

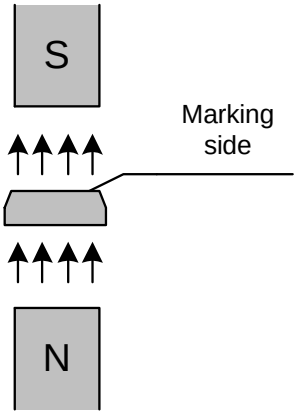

(SIP-4L)

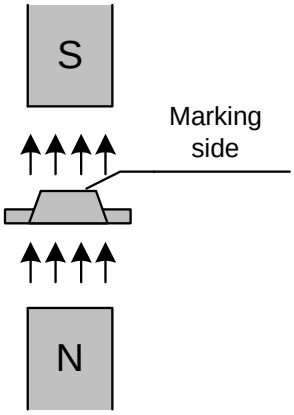

(SOT89-5L)

© Diodes Incorporated

Performance Characteristics

(1) SIP-4L

T_A (°C)	25	50	60	70	80	85	90	95	100
P_D (mW)	550	440	396	352	308	286	264	242	220
T_A (°C)	**105**	**110**	**115**	**120**	**125**	**130**	**135**	**140**	**150**
P_D (mW)	198	176	154	132	110	88	66	44	0

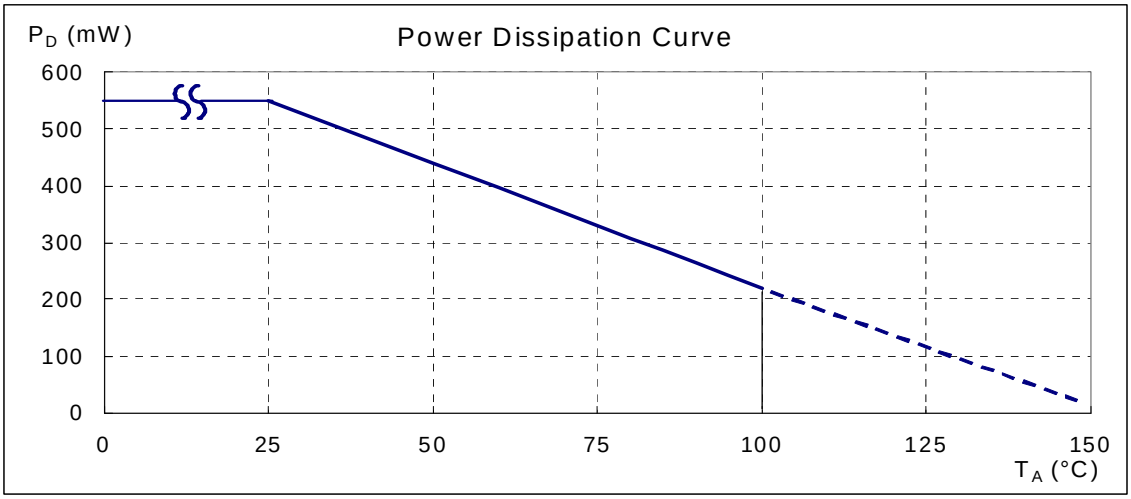

(2) SOT89-5L

T_A (°C)	25	50	60	70	75	80	85	90	95	100
P_D (mW)	800	640	576	512	480	448	416	384	352	320
T_A (°C)	**105**	**110**	**115**	**120**	**125**	**130**	**135**	**140**	**145**	**150**
P_D (mW)	288	256	224	192	160	128	96	64	32	0

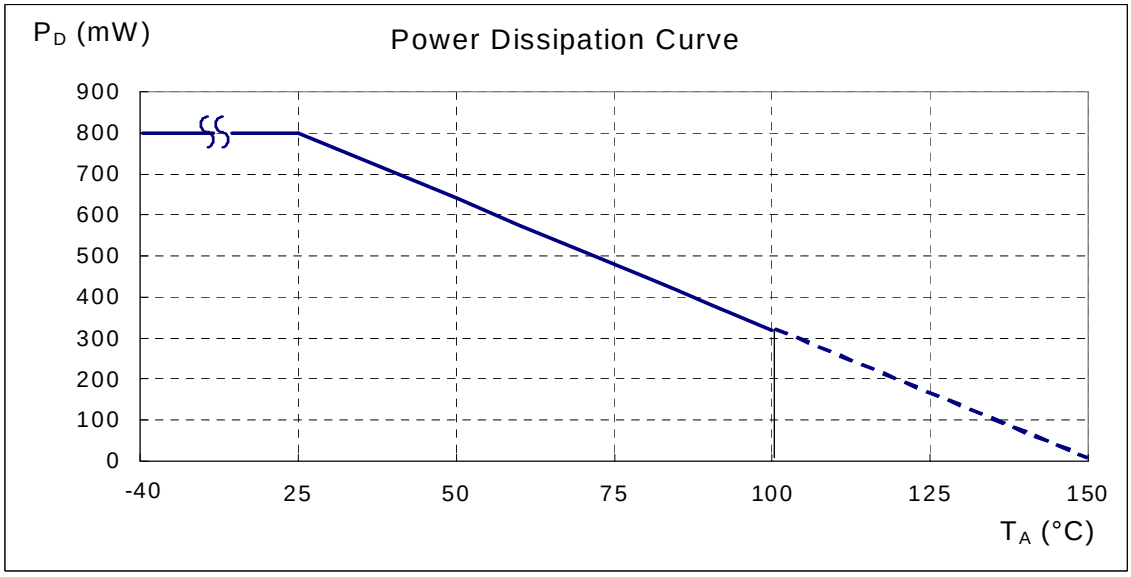

© Diodes Incorporated

Ordering Information

AH 284 - X G - X

Package	Green	Packing
P : SIP-4L Y : SOT89-5L	G : Green (Note 4)	B : Bulk 13 : Tape & Reel

Device	Package Code	Packaging (Note 5, 6)	Bulk		13" Tape and Reel	
			Quantity	Part Number Suffix	Quantity	Part Number Suffix
AH284-PG-B	P	SIP-4L	1000	-B	NA	NA
AH284-YG-13	Y	SOT89-5L	NA	NA	2500/Tape & Reel	-13

Notes: 4. EU Directive 2002/95/EC (RoHS). All applicable RoHS exemptions applied. Please visit our website at http://www.diodes.com/products/lead_free.html.
5. Pad layout as shown on Diodes Inc. suggested pad layout document AP02001, which can be found on our website at http://www.diodes.com/datasheets/ap02001.pdf.
6. Reverse taping as shown on Diodes Inc. Surface Mount (SMD) Packaging document AP02007, which can be found on our website http://www.diodes.com/datasheets/ap02007.pdf.

Marking Information

(1) SIP-4L

(Top View)

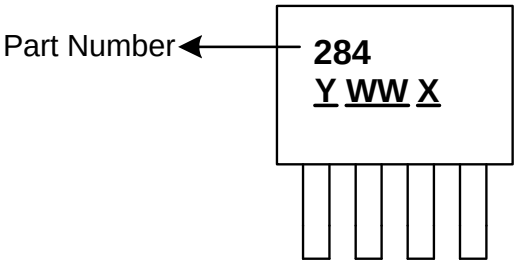

Y : Year : 0~9
WW : Week : 01~52, "52" represents 52 and 53 week
X : Internal Code : A~Z : Green

(2) SOT89-5L

(Top View)

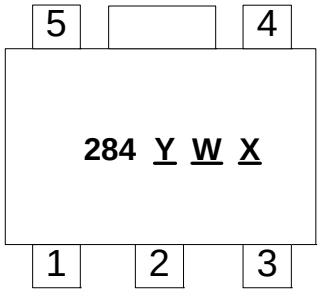

Y : Year : 0~9
W : Week : A~Z : 1~26 week;
a~z : 27~52 week;
z represents 52 and 53 week
X : Internal code
A~Z : Green

© Diodes Incorporated

Package Outline Dimensions (All Dimensions in mm)

(1) Package type: SIP-4L

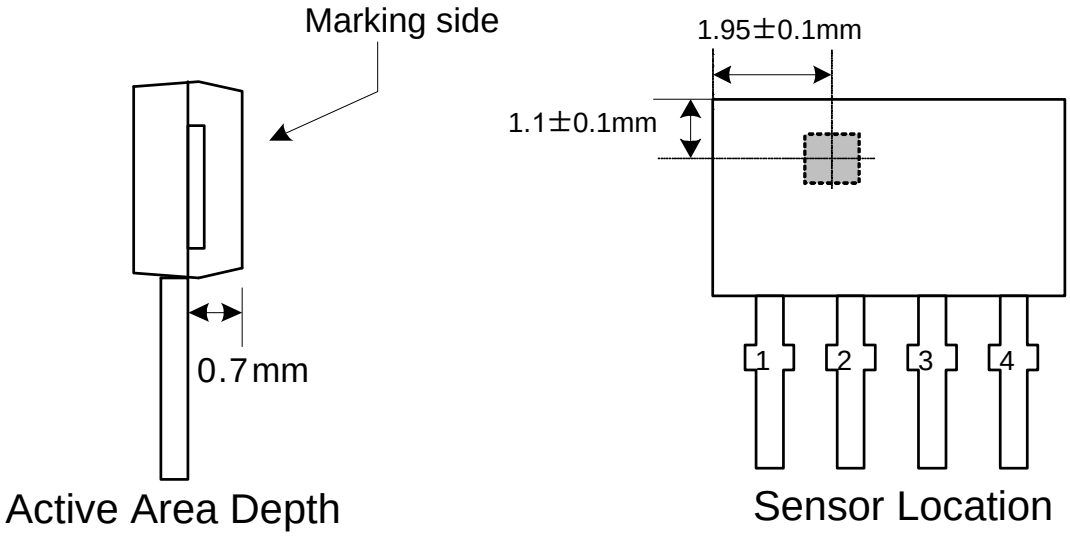

Package Dimension

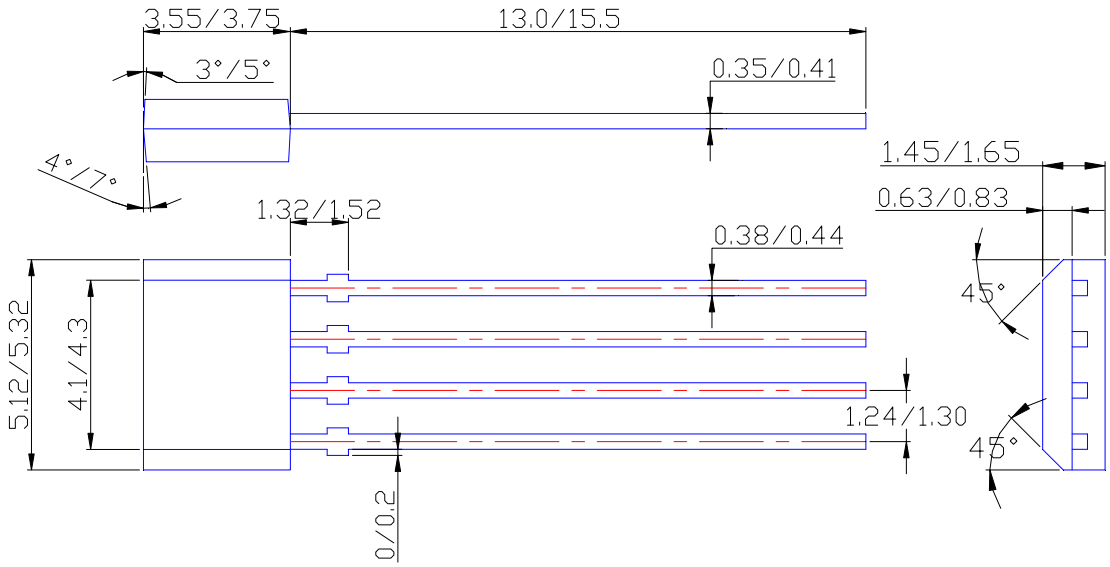

© Diodes Incorporated

Package Outline Dimensions (Continued)

(2) Package type: SOT89-5L

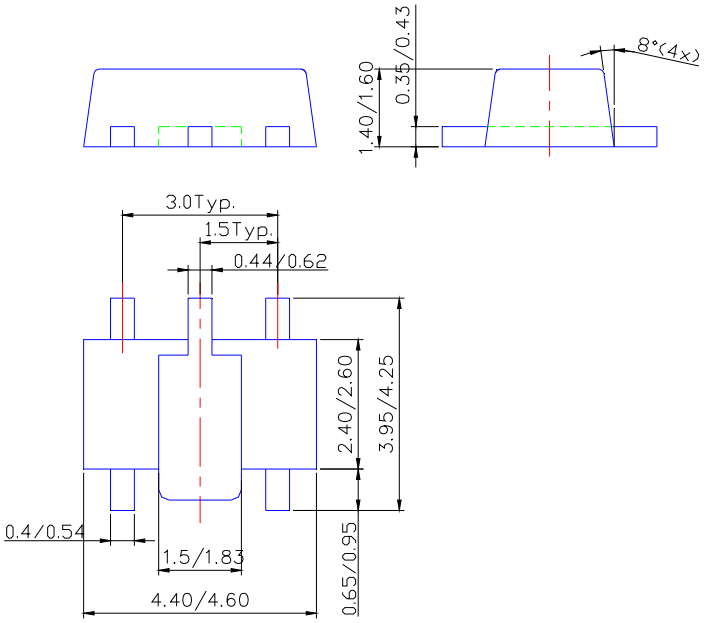

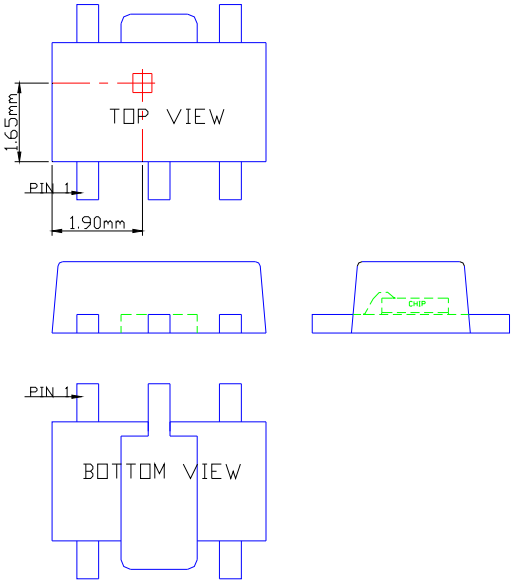

Sensor Location

© Diodes Incorporated

IMPORTANT NOTICE

DIODES INCORPORATED MAKES NO WARRANTY OF ANY KIND, EXPRESS OR IMPLIED, WITH REGARDS TO THIS DOCUMENT, INCLUDING, BUT NOT LIMITED TO, THE IMPLIED WARRANTIES OF MERCHANTABILITY AND FITNESS FOR A PARTICULAR PURPOSE (AND THEIR EQUIVALENTS UNDER THE LAWS OF ANY JURISDICTION).

Diodes Incorporated and its subsidiaries reserve the right to make modifications, enhancements, improvements, corrections or other changes without further notice to this document and any product described herein. Diodes Incorporated does not assume any liability arising out of the application or use of this document or any product described herein; neither does Diodes Incorporated convey any license under its patent or trademark rights, nor the rights of others. Any Customer or user of this document or products described herein in such applications shall assume all risks of such use and will agree to hold Diodes Incorporated and all the companies whose products are represented on Diodes Incorporated website, harmless against all damages.

Diodes Incorporated does not warrant or accept any liability whatsoever in respect of any products purchased through unauthorized sales channel.
Should Customers purchase or use Diodes Incorporated products for any unintended or unauthorized application, Customers shall indemnify and hold Diodes Incorporated and its representatives harmless against all claims, damages, expenses, and attorney fees arising out of, directly or indirectly, any claim of personal injury or death associated with such unintended or unauthorized application.

Products described herein may be covered by one or more United States, international or foreign patents pending. Product names and markings noted herein may also be covered by one or more United States, international or foreign trademarks.

LIFE SUPPORT

Diodes Incorporated products are specifically not authorized for use as critical components in life support devices or systems without the express written approval of the Chief Executive Officer of Diodes Incorporated. As used herein:

A. Life support devices or systems are devices or systems which:

1. are intended to implant into the body, or

2. support or sustain life and whose failure to perform when properly used in accordance with instructions for use provided in the labeling can be reasonably expected to result in significant injury to the user.

B. A critical component is any component in a life support device or system whose failure to perform can be reasonably expected to cause the failure of the life support device or to affect its safety or effectiveness.

Customers represent that they have all necessary expertise in the safety and regulatory ramifications of their life support devices or systems, and acknowledge and agree that they are solely responsible for all legal, regulatory and safety-related requirements concerning their products and any use of Diodes Incorporated products in such safety-critical, life support devices or systems, notwithstanding any devices- or systems-related information or support that may be provided by Diodes Incorporated. Further, Customers must fully indemnify Diodes Incorporated and its representatives against any damages arising out of the use of Diodes Incorporated products in such safety-critical, life support devices or systems.

Copyright © 2010, Diodes Incorporated

www.diodes.com

Общество с ограниченной ответственностью «МосЧип» ИНН 7719860671 / КПП 771901001
Адрес: 105318, г.Москва, ул.Щербаковская д.3, офис 1107

Данный компонент на территории Российской Федерации

Вы можете приобрести в компании MosChip.

Для оперативного оформления запроса Вам необходимо перейти по данной ссылке:

http://moschip.ru/get-element

Вы можете разместить у нас заказ для любого Вашего проекта, будь то серийное производство или разработка единичного прибора.

В нашем ассортименте представлены ведущие мировые производители активных и пассивных электронных компонентов.

Нашей специализацией является поставка электронной компонентной базы двойного назначения, продукции таких производителей как XILINX, Intel (ex.ALTERA), Vicor, Microchip, Texas Instruments, Analog Devices, Mini-Circuits, Amphenol, Glenair.

Сотрудничество с глобальными дистрибьюторами электронных компонентов, предоставляет возможность заказывать и получать с международных складов практически любой перечень компонентов в оптимальные для Вас сроки.

На всех этапах разработки и производства наши партнеры могут получить квалифицированную поддержку опытных инженеров.

Система менеджмента качества компании отвечает требованиям в соответствии с ГОСТ Р ИСО 9001, ГОСТ РВ 0015-002 и ЭС РД 009

Офис по работе с юридическими лицами:

105318, г.Москва, ул.Щербаковская д.3, офис 1107, 1118, ДЦ «Щербаковский»

Телефон: +7 495 668-12-70 (многоканальный)

Факс: +7 495 668-12-70 (доб.304)

E-mail: info@moschip.ru

Skype отдела продаж:
moschip.ru
moschip.ru_4
moschip.ru_6
moschip.ru_9