# K70 Enclosure Series

The K70 series enclosures are small to medium in size and offer cost effective solutions for many applications.

They can accommodate 8 to 32 terminals for field wire connections. Pressure plate terminals are standard with both the fixed and pluggable versions.

## MATERIALS

*Housing*
Housing Shell: ABS
Housing Cover: Polycarbonate, 10% Glass Filled
*Terminals*
Pressure Plate: Chromated Steel
Terminal Screw: Chromated Steel
Connector Contact: Tin Plated Bronze

**Temperature Range:** 60°C (140°F) UL94VO
**Standard Color:** Light Gray

## PROTECTION

K7O enclosures have an IP10 rating (hand protected). By using optional terminal covers the protection rating can be increased to IP20 (finger protected). VBG4 and other European accident prevention requirements are met.

## CONSTRUCTION

The K70 enclosures are supplied as unassembled kits. Each kit consists of a housing shell and a snap-on cover, complete with integral terminals and terminal-to-board connection provisions. Integral printed circuit board guides are molded into the housing shell to save time when inserting boards, to prevent misconnections and to keep the boards in place. Integral tabs on the bottom of the shell further help to hold the boards in place and eliminate lateral movement and warpage.

Printed circuit boards can be mounted in three ways:
- Vertically
- Horizontally
- Behind the Front Cover

Boards can be placed vertically (perpendicular to the DIN rail) and/or horizontally (parallel with the DIN rail). Enclosures with plug-in covers can accept an additional board mounted directly behind the front cover. This board is ideal for mounting indicating devices such as LEDs, LCDs for monitoring, switches and potentiometers for setting and adjusting purposes. The housing cover snaps onto the housing shell. Two tabs lock the cover firmly in place. Removal of the cover is possible for service and repair. Potting is possible.

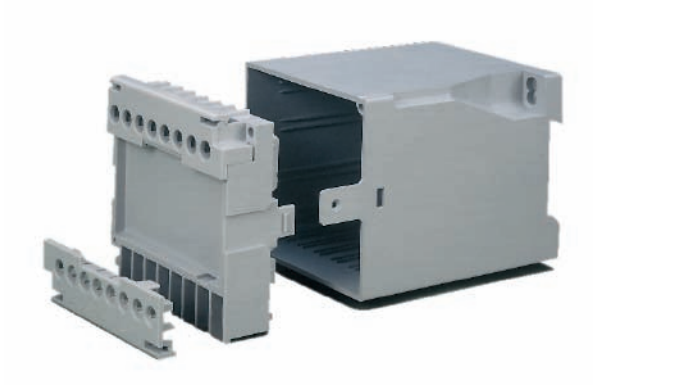

The K70 housing covers have external and internal barriers between terminals to increase creepage distance and to help prevent accidental touching of live potentials that may be present. Optional terminal covers that decrease the size of the opening are available as accessories.

## TERMINALS

Pressure Plate terminals with either fixed or pluggable terminal-to-board connections are offered in the K70 enclosures. The pressure plate, which is captive to the terminal screw, automatically rises when the screw is loosened. One or two wires of equal or different sizes up to 2.5mm² (14 AWG) can be terminated in each terminal. The grooved corners of the pressure plate ensure positive wire retention. The flat bottom of the terminal extends to the inside of the enclosure and provides the terminal-to-board connection. The terminal screws can be turned by a flat tip or a #2 Phillips screwdriver.

Upon request, terminals can be loaded in selected positions only.

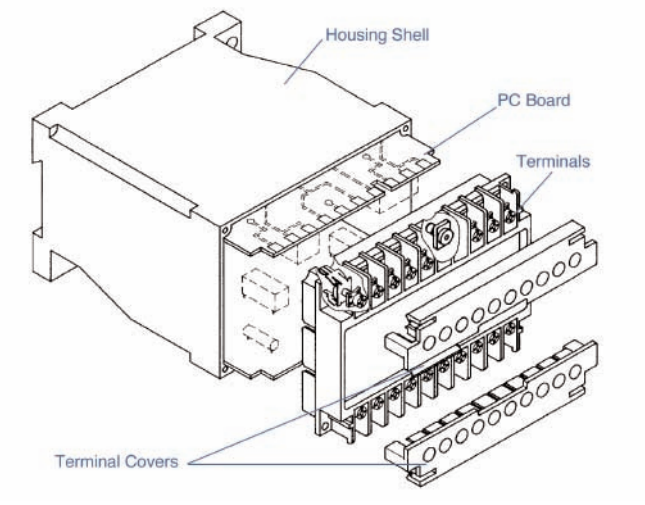


## TERMINAL-TO-BOARD CONNECTIONS

The K70 series offers fixed and pluggable terminal-to-board connection possibilities.

### Fixed Connections

Fixed terminal-to-board connections can be made by Wire Jumper, Fast On tabs or Machine Solderable Pins (K7022.5C only).

***Fast On*** tabs, (2.8 x 0.8 mm) accept industry standard Fast On connectors crimped onto wire jumpers.

***Wire Jumper*** connections can also be made by soldering a wire jumper between the center holes of the Fast On tab and the printed circuit board(s).

***Machine Solderable* Pins** (offered only with type K7022.5C) can be removed from the enclosure and machine soldered to the board in the same step as other components, saving assembly time.

### Pluggable Connections

Pluggable terminal-to-board connections are made by using ***Card Edge*** connectors. They are an integral part of the covers of K7075P, K70100P and K70150P and plug directly onto the board(s). ***Solder Pins*** are also provided in these enclosures for terminal-to-board connections when mounting an additional board directly behind the front cover. A ***Wire Jumper*** can be soldered to these pins as well.

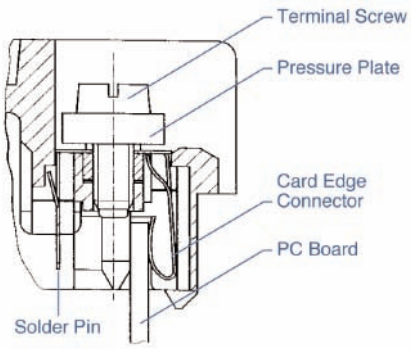


For better retention, the plug-in type covers have captive screws at the corners that insert into brass bushings, molded into the housing shell. The pluggable versions are ideal whenever quick connections and replacement are important. They also reduce the danger of misconnected wires and downtime.

## MOUNTING

The K70 Enclosures mount easily by snapping onto standard 35mm DIN Rail. Many can also be panel mounted using corner mounting holes which accept two M4 or M5 (#6 or #10) screws. These mounting holes are molded into two corners of the housing shell base and do not increase the height or width of the enclosure, thus insuring a compact, high density arrangement when multiple enclosures are installed adjacent to each other. Enclosure types K7022.5A, K7022.5B and K7022.5C have two integral pull-out tabs on the base of the enclosure for panel mounting. (Refer to Enclosure Mounting Procedures on page 19.)

## MARKING

The K70 enclosures have an area on the front of the cover for marking and mounting of components such as switches, potentiometers, LEDs or LCD indicators. Custom imprinted plates can be inserted as well, allowing imprinting of plates separate from the enclosure, reducing cost and delays.

## ACCESSORIES

- 35 x 7.5 mm DIN Rail
- Terminal Covers
- Pull-Out Panel Mounting Tabs.

## CUSTOMIZATION

Enclosures can be customized with cutouts and holes for potentiometers, switches, LEDs, LCDs and other devices. Using state of the art machining, we can punch, drill or cut to your most exacting specifications. Custom colors and special markings are also available. Please let us know what your requirements are.

## 8 Terminal

### Solder/Tab Connection

### TECHNICAL INFORMATION

**Electrical:**
25A, 300V, 24-14 AWG
**Housing Material:**
ABS
**Cover Material:**
Glass-filled Polycarbonate
**Temperature Range:**
Up to 60°C (140°F)
**Flammability Rating:**
UL94 V-O
**Color:**
Light Gray

**Terminal Type:**
Pressure Plate
**Terminal Screw Size:**
M2.5
**Recommended Torque:**
0.8Nm
**PCB Locations:**
(2) Vertical
**Mounting:**
35mm DIN Rail or panel mount

### ORDERING INFORMATION

| Part Number | Type | Description | PCB Connection |
|---|---|---|---|
| 90.001 | K7022.5A | Double Level Terminals | Wire Jumper/ Fast On |

### ACCESSORIES

| Accessories | Part Number | Type |
|---|---|---|
| DIN Rail | 2511120/1M | TS35x7.5/1M |
| Terminal Covers* | 90.001.1/90.001.2 | K7022.5A/TC1,TC2 |

### ENCLOSURE DRAWING (To convert to inches divide by 25.4.)

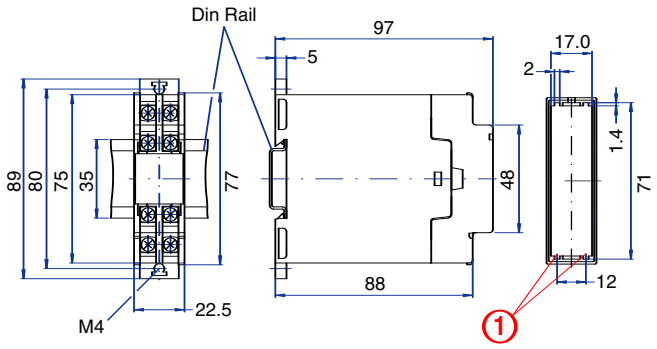


### PCB DRAWING (To convert to inches divide by 25.4.)

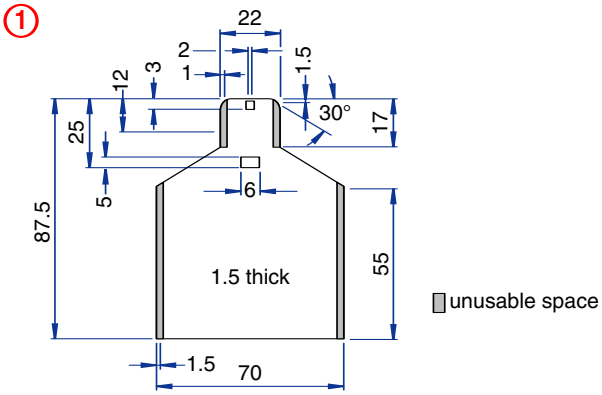


* Note: Need one of each Terminal Cover.

## 10 Terminal

### Solder/Tab Connection

### TECHNICAL INFORMATION

**Electrical:**
25A, 300V, 22-14 AWG
**Housing Material:**
ABS
**Cover Material:**
Glass-filled Polycarbonate
**Temperature Range:**
Up to 60°C (140°F)
**Flammability Rating:**
UL94 V-O
**Color:**
Light Gray

**Terminal Type:**
Pressure Plate
**Terminal Screw Size:**
M3.5
**Recommended Torque:**
0.8Nm
**PCB Locations:**
(10) Vertical
**Mounting:**
35mm DIN Rail or panel mount

### ORDERING INFORMATION

| Part Number | Type | Description | PCB Connection |
|---|---|---|---|
| 90.010 | K7045C | Single Level Terminals | Wire Jumper/ Fast On |

### ACCESSORIES

| Accessories | Part Number | Type |
|---|---|---|
| DIN Rail | 2511120/1M | TS35x7.5/1M |
| Terminal Cover** | 90.010.1 | K7045C/TC1 |

### ENCLOSURE DRAWING (To convert to inches divide by 25.4.)

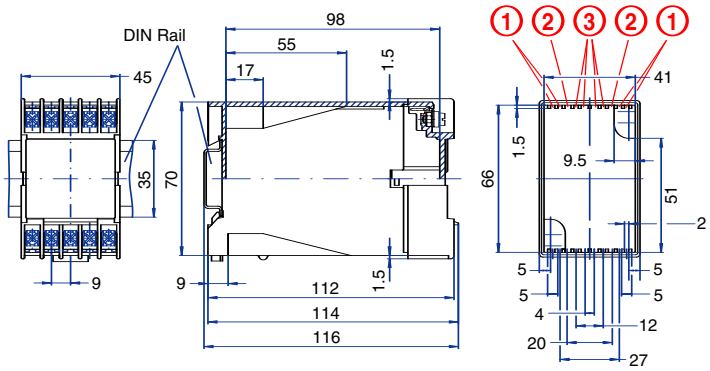


### PCB DRAWING (To convert to inches divide by 25.4.)

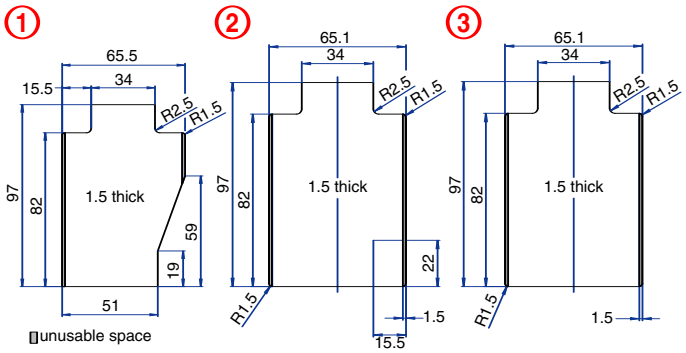


** Note: One piece Teminal Cover covers both sides.

## 12 Terminal
### Solder/Tab Connection

### TECHNICAL INFORMATION

**Electrical:**
20A, 300V, 24-14 AWG
**Housing Material:**
ABS
**Cover Material:**
Glass-filled Polycarbonate
**Temperature Range:**
Up to 60°C (140°F)
**Flammability Rating:**
UL94 V-O
**Color:**
Light Gray

**Terminal Type:**
Pressure Plate
**Terminal Screw Size:**
M2.5
**Recommended Torque:**
0.8Nm
**PCB Locations:**
(2) Vertical
**Mounting:**
35mm DIN Rail or panel mount

### ORDERING INFORMATION

| Part Number | Type | Description | PCB Connection |
|---|---|---|---|
| 90.020 | K7022.5B | Double Level Terminals | Wire Jumper/ Fast On |

### ACCESSORIES

| Accessories | Part Number | Type |
|---|---|---|
| DIN Rail | 2511120/1M | TS35x7.5/1M |
| Terminal Covers* | 90.020.1/90.020.2 | K7022.5BTC1/TC2 |

### ENCLOSURE DRAWING (To convert to inches divide by 25.4.)

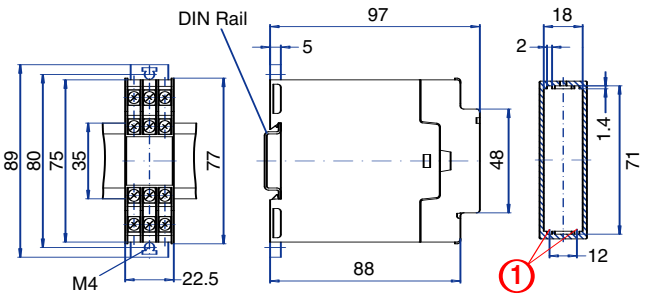


### PCB DRAWING (To convert to inches divide by 25.4.)

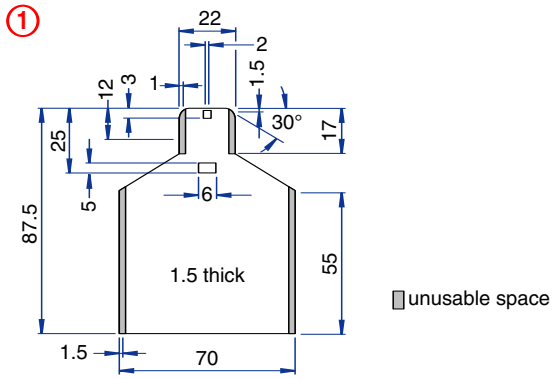


* Note: Need one of each Terminal Cover.

## 12 Terminal
### Solder Connection

### TECHNICAL INFORMATION

**Electrical:**
20A, 300V, 22-14 AWG
**Housing Material:**
ABS
**Cover Material:**
Glass-filled Polycarbonate
**Temperature Range:**
Up to 60°C (140°F)
**Flammability Rating:**
UL94 V-O
**Color:**
Light Gray

**Terminal Type:**
Pressure Plate
**Terminal Screw Size:**
M3.5
**Recommended Torque:**
0.8Nm
**PCB Locations:**
(2) Vertical
**Mounting:**
35mm DIN Rail or panel mount

### ORDERING INFORMATION

| Part Number | Type | Description | PCB Connection |
|---|---|---|---|
| 90.030 | K7022.5C | Shrouded Double Level Terminals | Wire Jumper/ Machine Solderable Pins |

### ACCESSORIES

| Accessories | Part Number | Type |
|---|---|---|
| DIN Rail | 2511120/1M | TS35x7.5/1M |

### ENCLOSURE DRAWING (To convert to inches divide by 25.4.)

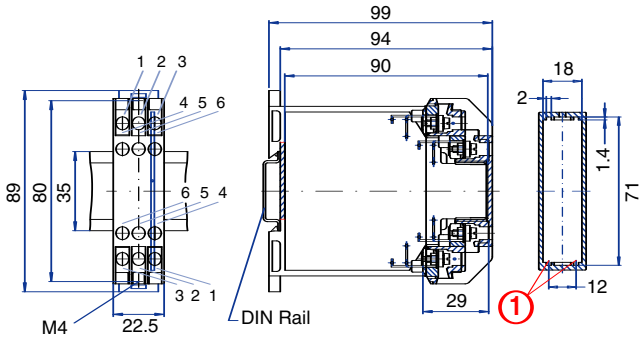


### PCB DRAWING (To convert to inches divide by 25.4.)

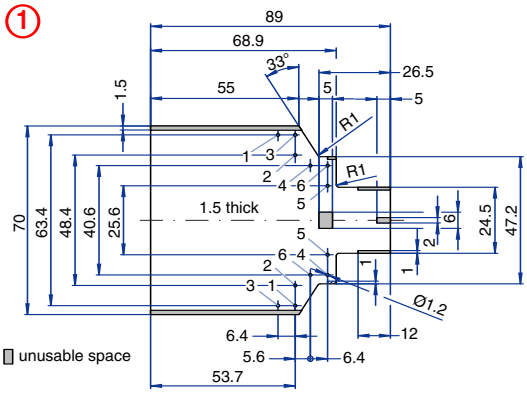

## 12 Terminal
### Solder/Tab Connection

### TECHNICAL INFORMATION

**Electrical:**
25A, 300V, 22-14 AWG
**Housing Material:**
ABS
**Cover Material:**
Glass-filled Polycarbonate
**Temperature Range:**
Up to 60°C (140°F)
**Flammability Rating:**
UL94 V-O
**Color:**
Light Gray

**Terminal Type:**
Pressure Plate
**Terminal Screw Size:**
M3.5
**Recommended Torque:**
0.8Nm
**PCB Locations:**
(5) Vertical
(1) Behind Cover
**Mounting:**
35mm DIN Rail

### ORDERING INFORMATION

| Part Number | Type | Description | PCB Connection |
|---|---|---|---|
| 90.040 | K7055 | Single Level Terminals | Wire Jumper/ Fast On |

### ACCESSORIES

| Accessories | Part Number | Type |
|---|---|---|
| DIN Rail | 2511120/1M | TS35x7.5/1M |
| Terminal Covers* | 90.040.1 | K7055/TC1 |

### ENCLOSURE DRAWING (To convert to inches divide by 25.4.)

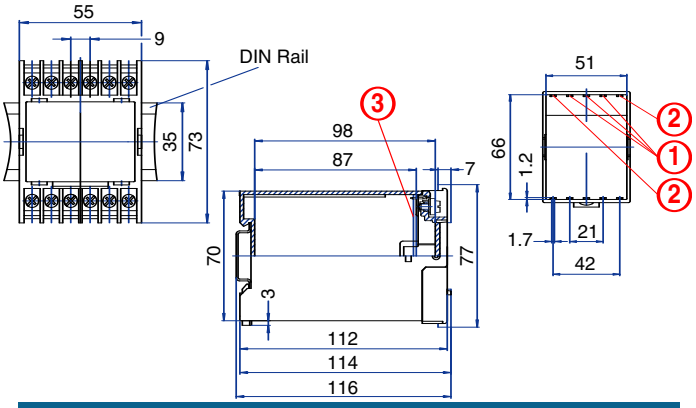


### PCB DRAWING (To convert to inches divide by 25.4.)

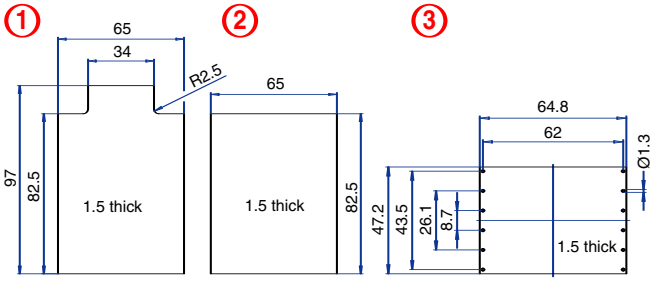


* Note: Need two Terminal Covers.

## 16 Terminal
### Pluggable Connection

### TECHNICAL INFORMATION

**Electrical:**
10A, 300V, 22-14 AWG
**Housing Material:**
ABS
**Cover Material:**
Glass-filled Polycarbonate
**Temperature Range:**
Up to 60°C (140°F)
**Flammability Rating:**
UL94 V-O
**Color:**
Light Gray

**Terminal Type:**
Pressure Plate
**Terminal Screw Size:**
M3.5
**Recommended Torque:**
0.8Nm
**PCB Locations:**
(7) Vertical (6) Horizontal
(1) Behind Cover
**Mounting:**
35mm DIN Rail or panel mount

### ORDERING INFORMATION

| Part Number | Type | Description | PCB Connection |
|---|---|---|---|
| 90.050 | K7075P | Single Level Terminals | Wire Jumper/ Solder Pin/ Card Edge |

### ACCESSORIES

| Accessories | Part Number | Type |
|---|---|---|
| DIN Rail | 2511120/1M | TS35x7.5/1M |
| Terminal Cover* | 90.050.1 | K7075P/TC1 |

### ENCLOSURE DRAWING (To convert to inches divide by 25.4.)

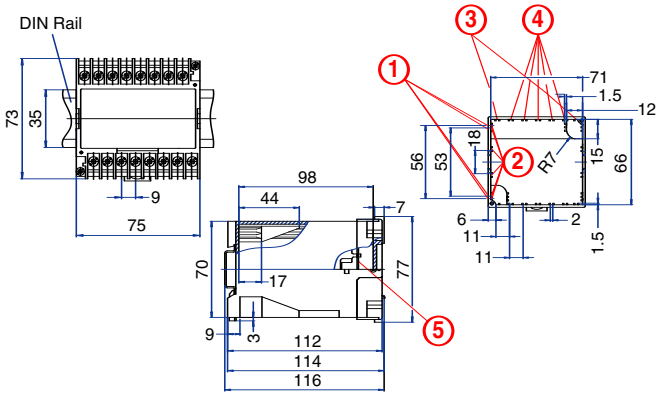


### PCB DRAWING (To convert to inches divide by 25.4.)

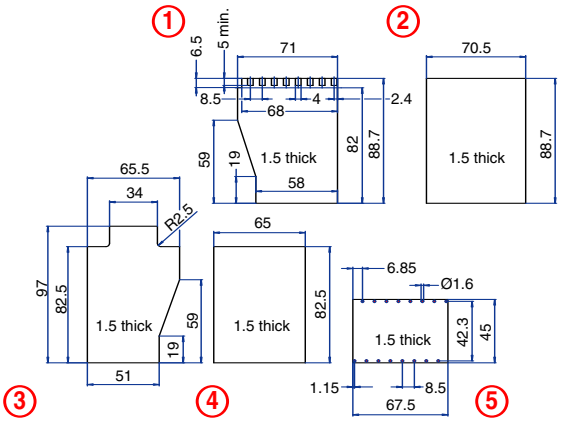


* Note: Need two Terminal Covers.

## 16 Terminal

**Pluggable Connection (DIN Rail Mount Only)**

### TECHNICAL INFORMATION

**Electrical:**
10A, 300V, 22-14 AWG

**Housing Material:**
ABS

**Cover Material:**
Glass-filled Polycarbonate

**Temperature Range:**
Up to 60°C (140°F)

**Flammability Rating:**
UL94 V-O

**Color:**
Light Gray

**Terminal Type:**
Pressure Plate

**Terminal Screw Size:**
M3.5

**Recommended Torque:**
0.8Nm

**PCB Locations:**
(7) Vertical (6) Horizontal
(1) Behind Cover

**Mounting:**
35mm DIN Rail

### ORDERING INFORMATION

| Part Number | Type | Description | PCB Connection |
|---|---|---|---|
| 90.050.5 | K7075P | Single Level Terminals | Wire Jumper/ Solder Tab/ Card Edge |

### ACCESSORIES

| Accessories | Part Number | Type |
|---|---|---|
| DIN Rail | 2511120/1M | TS35x7.5/1M |
| Terminal Covers* | 90.050.1 | K7075P/TC1 |

### ENCLOSURE DRAWING (To convert to inches divide by 25.4.)

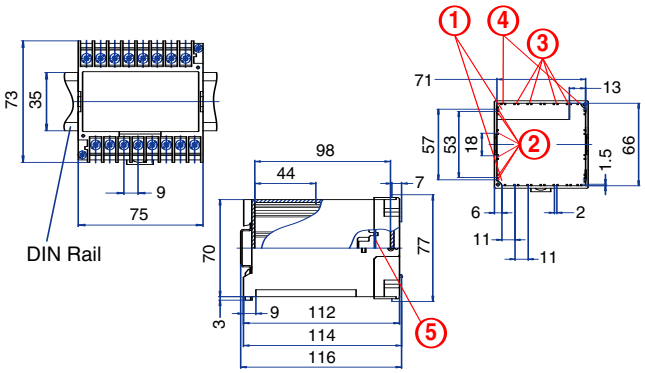


### PCB DRAWING (To convert to inches divide by 25.4.)

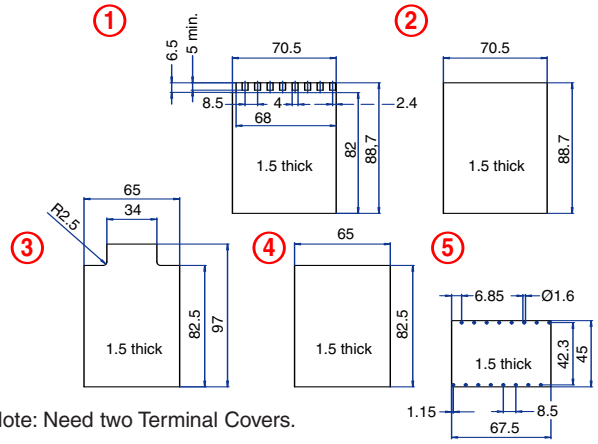


* Note: Need two Terminal Covers.

## 20 Terminal

**Solder/Tab Connection**

### TECHNICAL INFORMATION

**Electrical:**
25A, 300V, 22-14 AWG

**Housing Material:**
ABS

**Cover Material:**
Glass-filled Polycarbonate

**Temperature Range:**
Up to 60°C (140°F)

**Flammability Rating:**
UL94 V-O

**Color:**
Light Gray

**Terminal Type:**
Pressure Plate

**Terminal Screw Size:**
M3.5

**Recommended Torque:**
0.8Nm

**PCB Locations:**
(10) Vertical

**Mounting:**
35mm DIN Rail or panel mount

### ORDERING INFORMATION

| Part Number | Type | Description | PCB Connection |
|---|---|---|---|
| 90.060 | K7045D1 | Double Level Terminals | Wire Jumper/ Fast On |

### ACCESSORIES

| Accessories | Part Number | Type |
|---|---|---|
| DIN Rail | 2511120/1M | TS35x7.5/1M |

### ENCLOSURE DRAWING (To convert to inches divide by 25.4.)

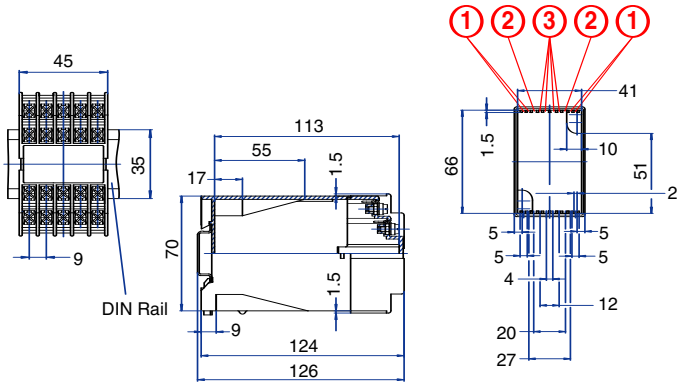


### PCB DRAWING (To convert to inches divide by 25.4.)

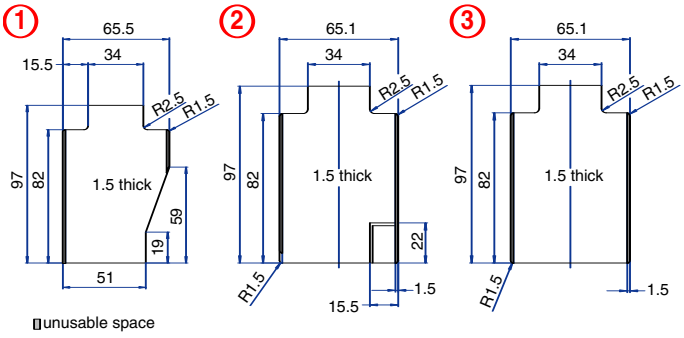

## 20 Terminal
### Solder/Tab Connection

### TECHNICAL INFORMATION

**Electrical:**
25A, 300V, 22-14 AWG
**Housing Material:**
ABS
**Cover Material:**
Glass-filled Polycarbonate
**Temperature Range:**
Up to 60°C (140°F)
**Flammability Rating:**
UL94 V-O
**Color:**
Light Gray

**Terminal Type:**
Pressure Plate
**Terminal Screw Size:**
M3.5
**Recommended Torque:**
0.8Nm
**PCB Locations:**
(10) Vertical
**Mounting:**
35mm DIN Rail or panel mount

### ORDERING INFORMATION

| Part Number | Type | Description | PCB Connection |
|---|---|---|---|
| 90.070 | K7045D2 | Shrouded Double Level Terminals | Wire Jumper/ Fast On |

### ACCESSORIES

| Accessories | Part Number | Type |
|---|---|---|
| DIN Rail | 2511120/1M | TS35x7.5/1M |
| Terminal Covers* | | |

### ENCLOSURE DRAWING (To convert to inches divide by 25.4.)

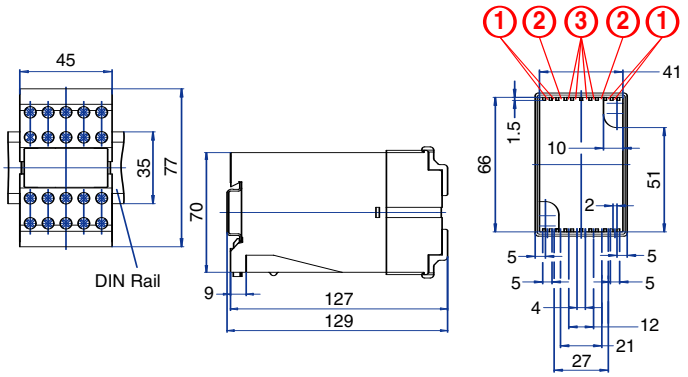


### PCB DRAWING (To convert to inches divide by 25.4.)

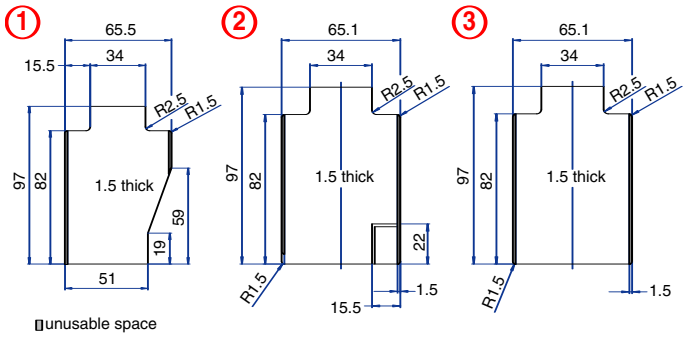


* Note: Integral Terminal Covers.

## 20 Terminal
### Solder/Tab Connection

### TECHNICAL INFORMATION

**Electrical:**
25A, 300V, 22-14 AWG
**Housing Material:**
ABS
**Cover Material:**
Glass-filled Polycarbonate
**Temperature Range:**
Up to 60°C (140°F)
**Flammability Rating:**
UL94 V-O
**Color:**
Light Gray

**Terminal Type:**
Pressure Plate
**Terminal Screw Size:**
M3.5
**Recommended Torque:**
0.8Nm
**PCB Locations:**
(4) Vertical (6) Horizontal
**Mounting:**
35mm DIN Rail or panel mount

### ORDERING INFORMATION

| Part Number | Type | Description | PCB Connection |
|---|---|---|---|
| 90.080 | K70100A | Single Level Terminals | Wire Jumper/ Fast On |

### ACCESSORIES

| Accessories | Part Number | Type |
|---|---|---|
| DIN Rail | 2511120/1M | TS35x7.5/1M |
| Terminal Cover** | 90.080.1 | K70100/TC1 |

### ENCLOSURE DRAWING (To convert to inches divide by 25.4.)

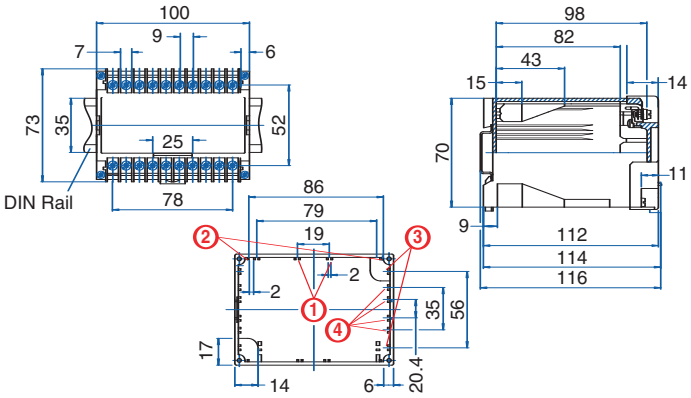


### PCB DRAWING (To convert to inches divide by 25.4.)

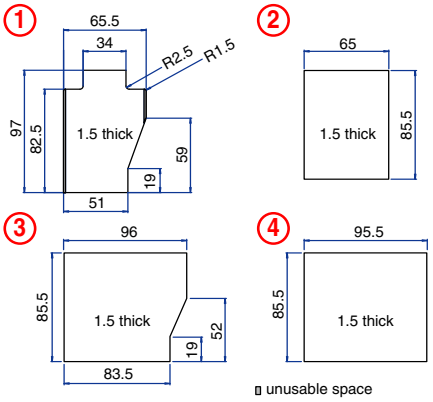


** Note: Need two Terminal Covers.

## 20 Terminal
### Pluggable Connection

### TECHNICAL INFORMATION

**Electrical:**
10A, 300V, 22-14 AWG
**Housing Material:**
ABS
**Cover Material:**
Glass-filled Polycarbonate
**Temperature Range:**
Up to 60°C (140°F)
**Flammability Rating:**
UL94 V-O
**Color:**
Light Gray

**Terminal Type:**
Pressure Plate
**Terminal Screw Size:**
M3.5
**Recommended Torque:**
0.8Nm
**PCB Locations**
(4) Vertical (6) Horizontal
(1) Behind Cover
**Mounting:**
35mm DIN Rail or panel mount

### ORDERING INFORMATION

| Part Number | Type | Description | PCB Connection |
|---|---|---|---|
| 90.090 | K70100P | Single Level Terminals | Wire Jumper/ Solder Pin/ Card Edge |

### ACCESSORIES

| Accessories | Part Number | Type |
|---|---|---|
| DIN Rail | 2511120/1M | TS35x7.5/1M |
| Terminal Covers* | 90.080.1 | K70100/TC1 |

### ENCLOSURE DRAWING (To convert to inches divide by 25.4.)

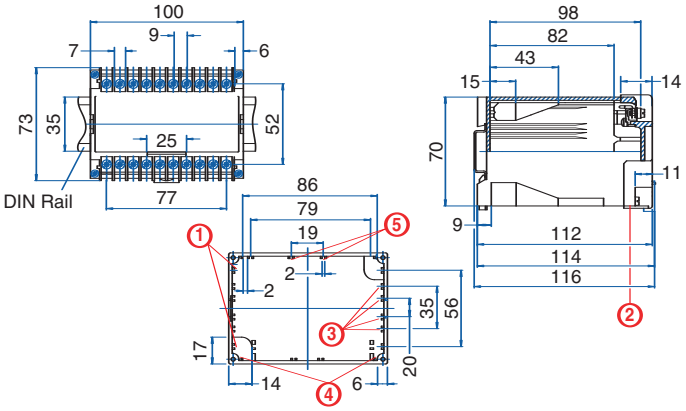


### PCB DRAWING (To convert to inches divide by 25.4.)

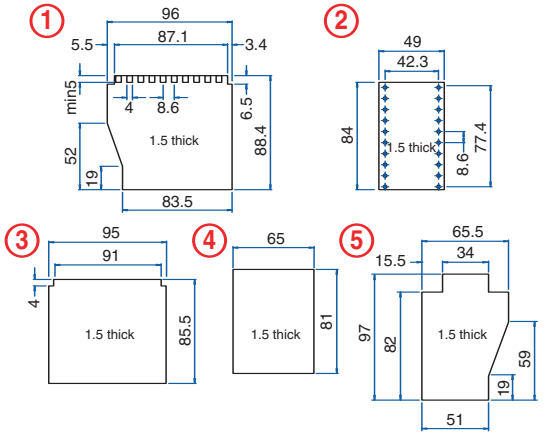


* Note: Need two Terminal Covers.

## 32 Terminal
### Pluggable Connection

### TECHNICAL INFORMATION

**Electrical:**
10A, 300V, 22-14 AWG
**Housing Material:**
ABS
**Cover Material:**
Glass-filled Polycarbonate
**Temperature Range:**
Up to 60°C (140°F)
**Flammability Rating:**
UL94 V-O
**Color:**
Light Gray

**Terminal Type:**
Pressure Plate
**Terminal Screw Size:**
M3.5
**Recommended Torque:**
0.8Nm
**PCB Locations**
(9) Vertical (6) Horizontal
(1) Behind Cover
**Mounting:**
35mm DIN Rail or panel mount

### ORDERING INFORMATION

| Part Number | Type | Description | PCB Connection |
|---|---|---|---|
| 90.100 | K70150P | Single Level Terminals | Wire Jumper/ Solder Pin/ Card Edge |

### ACCESSORIES

| Accessories | Part Number | Type |
|---|---|---|
| DIN Rail | 2511120/1M | TS35x7.5/1M |
| Terminal Cover* | 90.100.1 | K70150P/TC1 |

### ENCLOSURE DRAWING (To convert to inches divide by 25.4.)

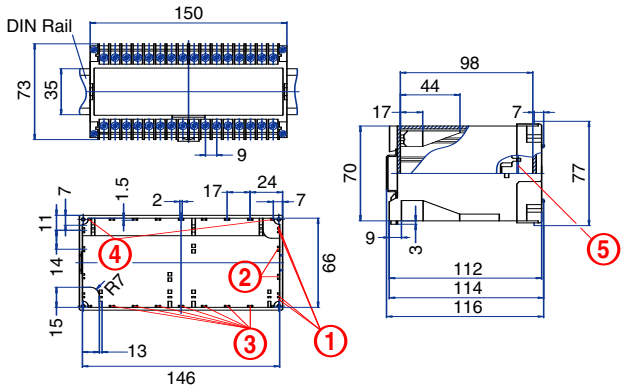


### PCB DRAWING (To convert to inches divide by 25.4.)

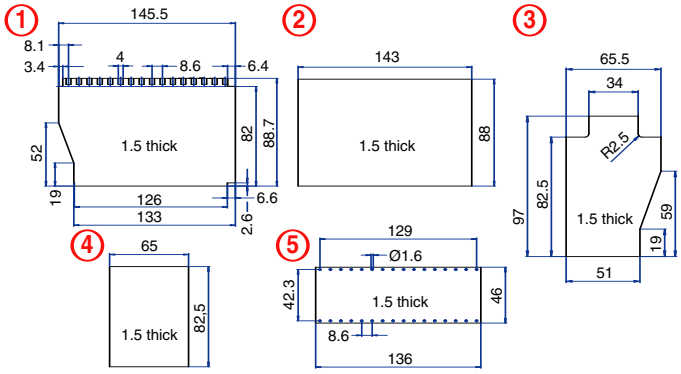


* Note: Need two Terminal Covers.

# KO4070 Enclosure Series

Economical, compact KO4070 enclosures are supplied as easy to assemble kits. They are ideal for housing I/O circuits, relays, timers and other small devices. Each kit consists of two identical housing half shells and 4 to 16 machine solderable terminals with standard or extended length pins.

## MATERIALS

Housing Shell: Polycarbonate, 10% Glass Filled
Terminal: Tinned Bronze
Terminal Screw: Chromated Steel

## Temperature Rating:

125°C (257°F) UL94 VO
Standard Color: Light Gray

## PROTECTION

KO4070 enclosures have an IP20 rating (finger protected) and meet VBG4 and other European accident prevention requirements.

## CONSTRUCTION

The KO4070 enclosures consist of two housing shells that snap together, and sectional, snap-together terminals. The maximum preassembled number of terminals are part of the enclosure kit. Potting is not recommended. Enclosures with removable center cover sections are available upon request.

## BOARD PLACEMENT

Each enclosure can accept two boards, each up to 1.5mm (.0625 in.) thick, inserted vertically (parallel to the DIN rail) facing the terminals. These boards can be machine soldered to the terminals. Enclosure types KO4074 through KO4079, accept larger boards that can be screwed to the sidewalls of the housing shells (vertically, perpendicular to the DIN rail) using molded-in standoffs and 2 screws. Boards mounted on the sides can be 1mm (.04 in.) thick and require a wire jumper connection.

## TERMINALS

Box clamp design terminal blocks are used with the KO4070 series enclosures. Wire(s) to be terminated are squeezed between the bottom of the clamp and the busbar for reliable, gastight connections. The terminal blocks can be machine soldered to the board in the same step as the other components to save time and labor. Enclosures with extended length pins are available to increase enclosure cavity for large components.
All terminals have funnel shaped wire openings to eliminate wire fraying. The terminal screws can be turned with a flat tip or a #1 or #2 Philips screwdriver.

## MOUNTING

The KO4070 series have integral mounting feet that snap onto standard 35mm DIN rail. They cannot be panel mounted.

## MARKING

Silk screen or attach label to the face of the enclosure.

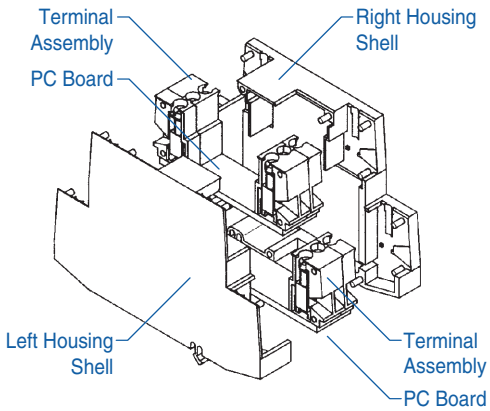

## 4 Terminal

### TECHNICAL INFORMATION

**Electrical:**
16A, 300V, 22-12 AWG
**Housing Material:**
Glass-filled Polycarbonate
**Temperature Range:**
Up to 125°C (257°F)
**Flammability Rating:**
UL94 V-O
**Color:**
Light Gray

**Terminal Type:**
Box Clamp
**Terminal Screw Size:**
M3.5
**Recommended Torque:**
0.8Nm
**PCB Locations:**
(2) Vertical, Parallel
**Mounting:**
35mm DIN Rail

### ORDERING INFORMATION

| Part Number | Type | Description | PCB Connection |
|---|---|---|---|
| 91.001 | KO4071 | Standard Length Pins | Solder Pins |

### ACCESSORIES

| Accessories | Part Number | Type |
|---|---|---|
| 1 Meter DIN Rail | 2511120/1M | TS35x7.5/1M |

### ENCLOSURE DRAWING (To convert to inches divide by 25.4.)

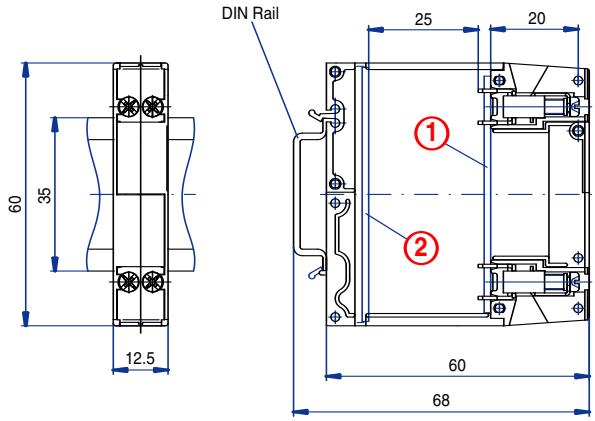


### PCB DRAWING (To convert to inches divide by 25.4.)

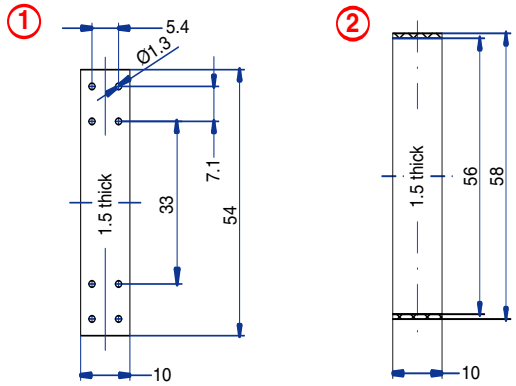


## 6 Terminal

### TECHNICAL INFORMATION

**Electrical:**
16A, 300V, 22-12 AWG
**Housing Material:**
Glass-filled Polycarbonate
**Temperature Range:**
Up to 125°C (257°F)
**Flammability Rating:**
UL94 V-O
**Color:**
Light Gray

**Terminal Type:**
Box Clamp
**Terminal Screw Size:**
M3.5
**Recommended Torque:**
0.8Nm
**PCB Locations:**
(2) Vertical, Parallel
**Mounting:**
35mm DIN Rail

### ORDERING INFORMATION

| Part Number | Type | Description | PCB Connection |
|---|---|---|---|
| 91.010 | KO4072 | Standard Length Pins | Solder Pins |

### ACCESSORIES

| Accessories | Part Number | Type |
|---|---|---|
| 1 Meter DIN Rail | 2511120/1M | TS35x7.5/1M |

### ENCLOSURE DRAWING (To convert to inches divide by 25.4.)

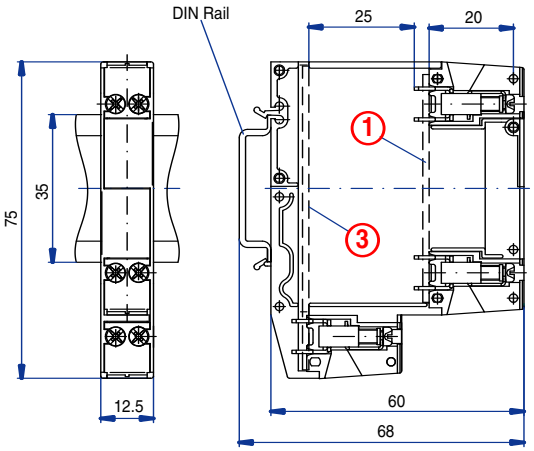


### PCB DRAWING (To convert to inches divide by 25.4.)

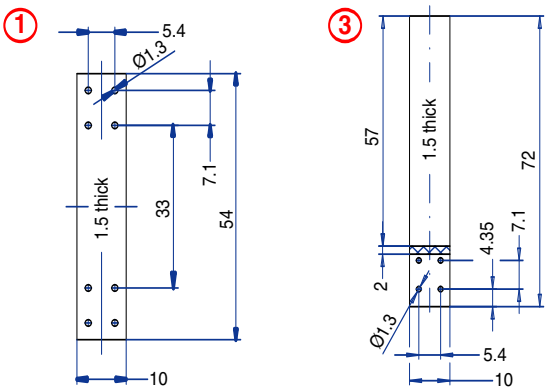

## 6 Terminal

### TECHNICAL INFORMATION

**Electrical:**
16A, 300V, 22-12 AWG
**Housing Material:**
Glass-filled Polycarbonate
**Temperature Range:**
Up up to 125°C (257°F)
**Flammability Rating:**
UL94 V-O
**Color:**
Light Gray

**Terminal Type:**
Box Clamp
**Terminal Screw Size:**
M3.5
**Recommended Torque:**
0.8Nm
**PCB Locations:**
(1) Vertical, Perpendicular
(2) Vertical, Parallel
**Mounting:**
35mm DIN Rail

### ORDERING INFORMATION

| Part Number | Type | Description | PCB Connection |
|---|---|---|---|
| 91.020 | KO4074 | Standard Length Pins | Solder Pins |

### ACCESSORIES

| Accessories | Part Number | Type |
|---|---|---|
| 1 Meter DIN Rail | 2511120/1M | TS35x7.5/1M |

### ENCLOSURE DRAWING (To convert to inches divide by 25.4.)

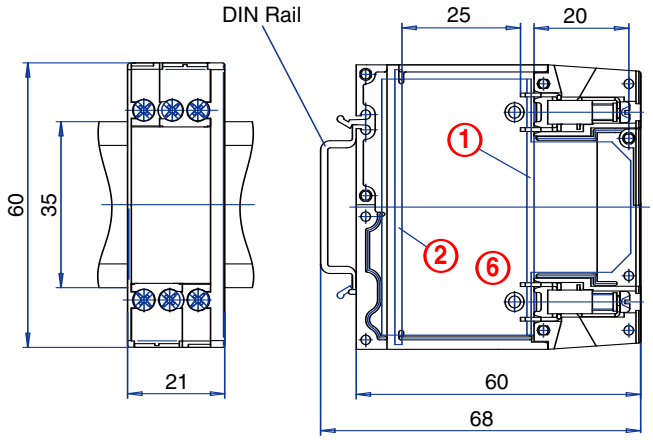


### PCB DRAWING (To convert to inches divide by 25.4.)

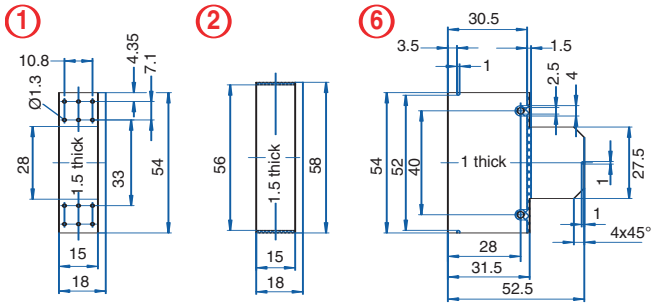


## 8 Terminal

### TECHNICAL INFORMATION

**Electrical:**
16A, 300V, 22-12 AWG
**Housing Material:**
Glass-filled Polycarbonate
**Temperature Range:**
Up up to 125°C (257°F)
**Flammability Rating:**
UL94 V-O
**Color:**
Light Gray

**Terminal Type:**
Box Clamp
**Terminal Screw Size:**
M3.5
**Recommended Torque:**
0.8Nm
**PCB Locations:**
(2) Vertical, Parallel
**Mounting:**
35mm DIN Rail

### ORDERING INFORMATION

| Part Number | Type | Description | PCB Connection |
|---|---|---|---|
| 91.030 | KO4073 | Standard Length Pins | Solder Pins |

### ACCESSORIES

| Accessories | Part Number | Type |
|---|---|---|
| 1 Meter DIN Rail | 2511120/1M | TS35x7.5/1M |

### ENCLOSURE DRAWING (To convert to inches divide by 25.4.)

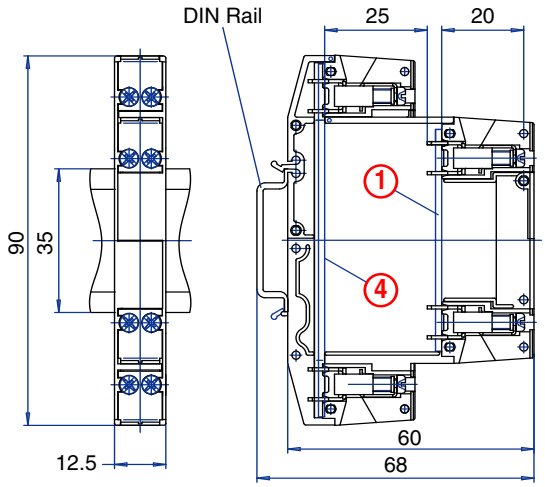


### PCB DRAWING (To convert to inches divide by 25.4.)

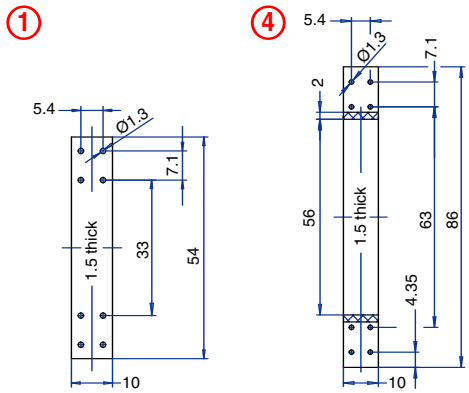

## 8 Terminal

### TECHNICAL INFORMATION

**Electrical:**
16A, 300V, 22-12 AWG
**Housing Material:**
Glass-filled Polycarbonate
**Temperature Range:**
Up to 125°C (257°F)
**Flammability Rating:**
UL94 V-O
**Color:**
Light Gray

**Terminal Type:**
Box Clamp
**Terminal Screw Size:**
M3.5
**Recommended Torque:**
0.8Nm
**PCB Locations:**
(2) Vertical, Perpendicular
(2) Vertical, Parallel
**Mounting:**
35mm DIN Rail

### ORDERING INFORMATION

| Part Number | Type | Description | PCB Connection |
|---|---|---|---|
| 91.040 | KO4077 | Standard Length Pins | Solder Pins |

### ACCESSORIES

| Accessories | Part Number | Type |
|---|---|---|
| 1 Meter DIN Rail | 2511120/1M | TS35x7.5/1M |

### ENCLOSURE DRAWING (To convert to inches divide by 25.4.)

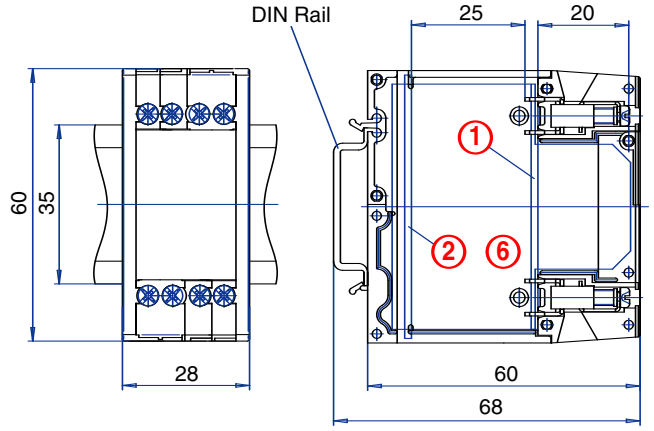


### PCB DRAWING (To convert to inches divide by 25.4.)

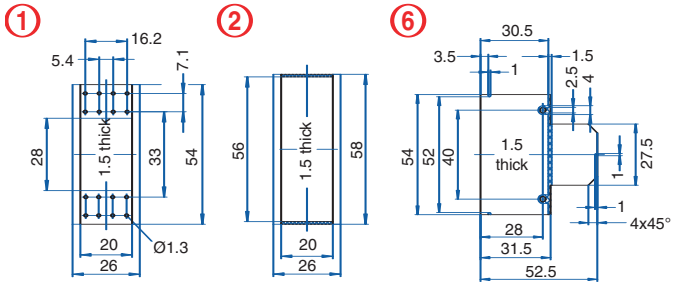


## 9 Terminal

### TECHNICAL INFORMATION

**Electrical:**
16A, 300V, 22-12 AWG
**Housing Material:**
Glass-filled Polycarbonate
**Temperature Range:**
Up to 125°C (257°F)
**Flammability Rating:**
UL94 V-O
**Color:**
Light Gray

**Terminal Type:**
Box Clamp
**Terminal Screw Size:**
M3.5
**Recommended Torque:**
0.8Nm
**PCB Locations:**
(1) Vertical, Perpendicular
(2) Vertical, Parallel
**Mounting:**
35mm DIN Rail

### ORDERING INFORMATION

| Part Number | Type | Description | PCB Connection |
|---|---|---|---|
| 91.050 | KO4075 | Standard Length Pins | Solder Pins |

### ACCESSORIES

| Accessories | Part Number | Type |
|---|---|---|
| 1 Meter DIN Rail | 2511120/1M | TS35x7.5/1M |

### ENCLOSURE DRAWING (To convert to inches divide by 25.4.)

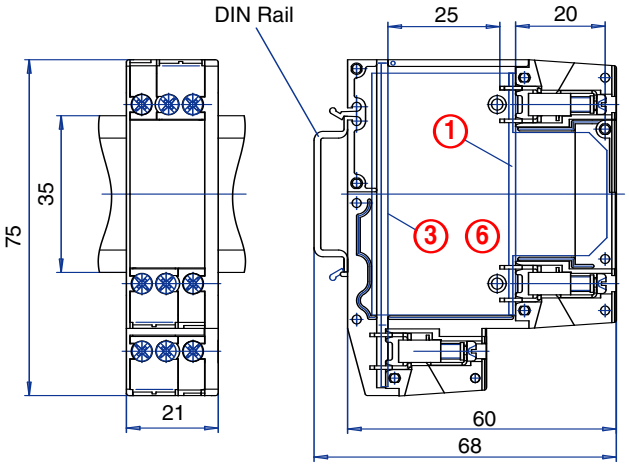


### PCB DRAWING (To convert to inches divide by 25.4.)

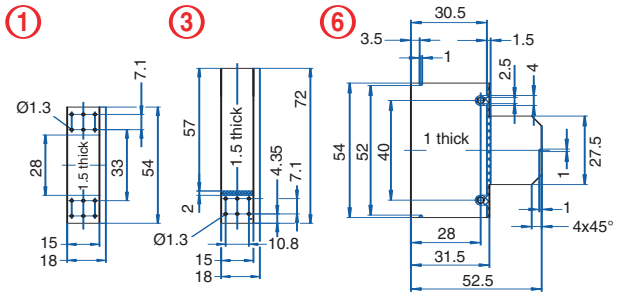

## 12 Terminal

### TECHNICAL INFORMATION

**Electrical:**
16A, 300V, 22-12 AWG
**Housing Material:**
Glass-filled Polycarbonate
**Temperature Range:**
Up to 125°C (257°F)
**Flammability Rating:**
UL94 V-O
**Color:**
Light Gray

**Terminal Type:**
Box Clamp
**Terminal Screw Size:**
M3.5
**Recommended Torque:**
0.8Nm
**PCB Locations:**
(1) Vertical, Perpendicular
(2) Vertical, Parallel
**Mounting:**
35mm DIN Rail

### ORDERING INFORMATION

| Part Number | Type | Description | PCB Connection |
|---|---|---|---|
| 91.060 | KO4076 | Standard Length Pins | Solder Pins |

### ACCESSORIES

| Accessories | Part Number | Type |
|---|---|---|
| 1 Meter DIN Rail | 2511120/1M | TS35x7.5/1M |

### ENCLOSURE DRAWING (To convert to inches divide by 25.4.)

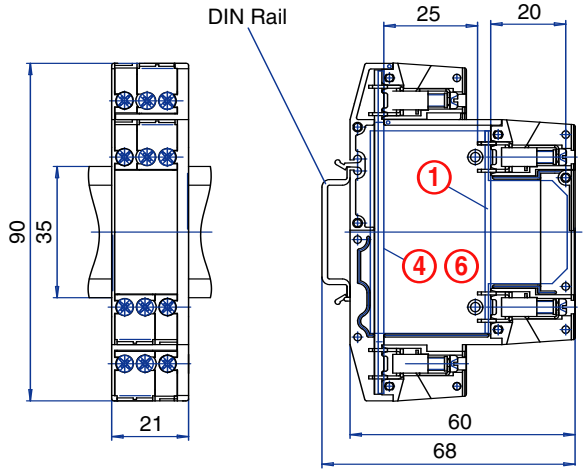


### PCB DRAWING (To convert to inches divide by 25.4.)

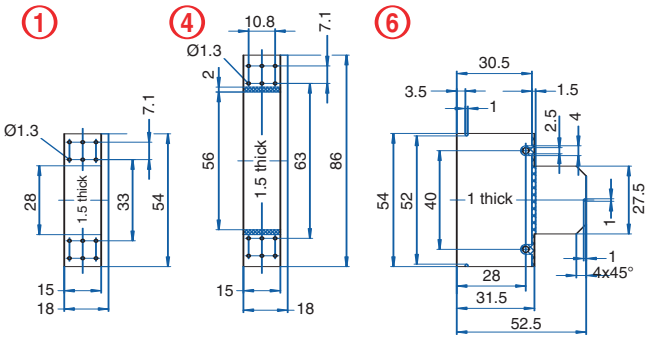


## 12 Terminal

### TECHNICAL INFORMATION

**Electrical:**
16A, 300V, 22-12 AWG
**Housing Material:**
Glass-filled Polycarbonate
**Temperature Range:**
Up to 125°C (257°F)
**Flammability Rating:**
UL94 V-O
**Color:**
Light Gray

**Terminal Type:**
Box Clamp
**Terminal Screw Size:**
M3.5
**Recommended Torque:**
0.8Nm
**PCB Locations:**
(2) Vertical, Perpendicular
(2) Vertical, Parallel
**Mounting:**
35mm DIN Rail

### ORDERING INFORMATION

| Part Number | Type | Description | PCB Connection |
|---|---|---|---|
| 91.070 | KO4078 | Standard Length Pins | Solder Pins |

### ACCESSORIES

| Accessories | Part Number | Type |
|---|---|---|
| 1 Meter DIN Rail | 2511120/1M | TS35x7.5/1M |

### ENCLOSURE DRAWING (To convert to inches divide by 25.4.)

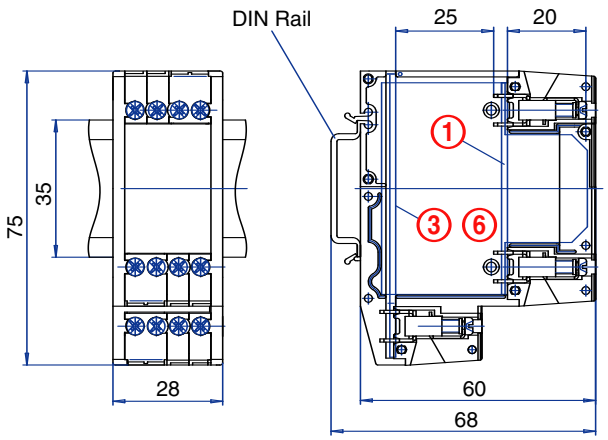


### PCB DRAWING (To convert to inches divide by 25.4.)

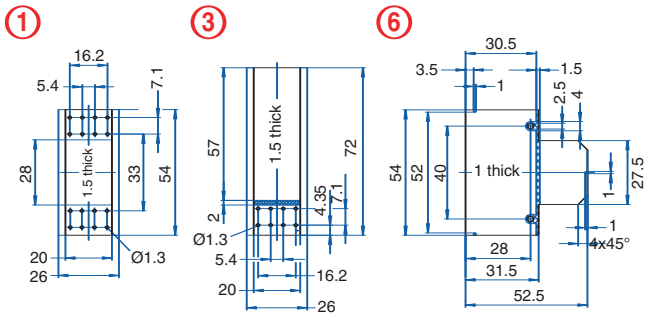

## 16 Terminal

### TECHNICAL INFORMATION

**Electrical:**
16A, 300V, 22-12 AWG

**Housing Material:**
Glass-filled Polycarbonate

**Temperature Range:**
Up to 125°C (257°F)

**Flammability Rating:**
UL94 V-O

**Color:**
Light Gray

**Terminal Type:**
Box Clamp

**Terminal Screw Size:**
M3.5

**Recommended Torque:**
0.8Nm

**PCB Locations:**
(2) Vertical, Perpendicular
(2) Vertical, Parallel

**Mounting:**
35mm DIN Rail

### ORDERING INFORMATION

| Part Number | Type | Description | PCB Connection |
|---|---|---|---|
| 91.080 | KO4079 | Standard Length Pins | Solder Pins |

### ACCESSORIES

| Accessories | Part Number | Type |
|---|---|---|
| 1 Meter DIN Rail | 2511120/1M | TS35x7.5/1M |

### ENCLOSURE DRAWING (To convert to inches divide by 25.4.)

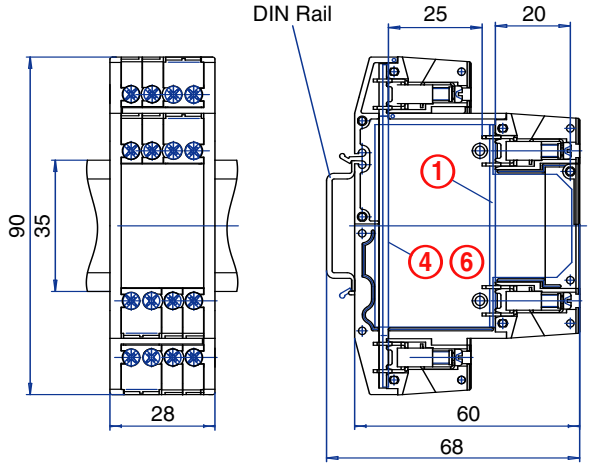


### PCB DRAWING (To convert to inches divide by 25.4.)

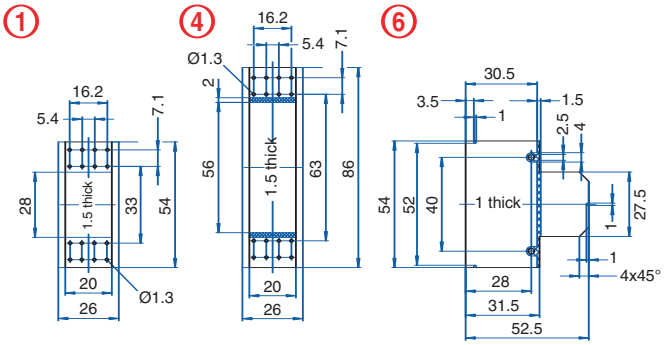

# KU4000 Enclosure Series

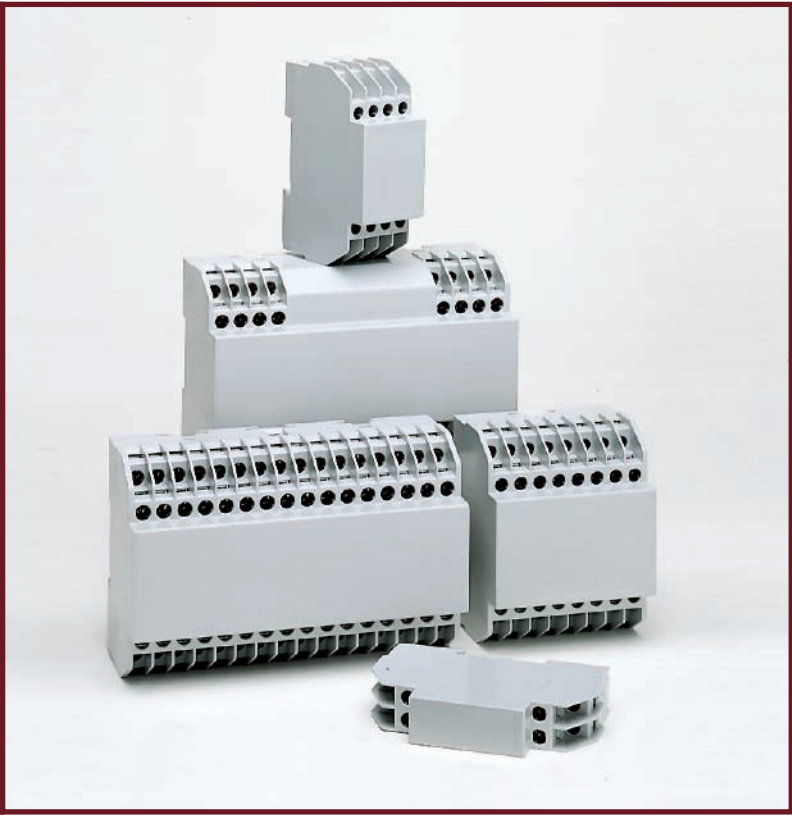

Versatile, compact enclosures are ideal for applications with space constraints and for mounting within large international style enclosures with 45mm (1.77 in.) cutouts, such as Altech's EK and AK series nonmetallic enclosures. Small to medium in size, KU4000 enclosures offer 8 to 64 terminals for field wire connections. Pressure plate or spring cage terminals are standard. The KU4000 series are equipped with double level terminals which provide a maximum number of external connections in a minimum amount of space. Standard enclosures are supplied as kits, containing the base,cover and the maximum number of terminals.

## MATERIALS

*Housing*

Housing Shell: Polycarbonate, 10% Glass Filled
Base: Polycarbonate, 10% Glass Filled

*Terminals*

Terminal Pins: Tinned Steel
Pressure Plate: Chromated Steel
Terminal Screws: Chromated Steel
Spring Clamps: Stainless Steel

**Temperature Rating:** 110°C (230°F) UL94VO
Standard Color: Light Gray

## PROTECTION

KU4000 enclosures have an IP20 rating (finger protected) and meet VBG4 and other European accident prevention requirements.

## CONSTRUCTION

The KU4000 series housings are supplied as unassembled kits. Each kit consists of a flat base, a housing cover and 8, 16, 24, 32, 48 or 64 terminals. Double level terminals keep the enclosure size to a minimum, and yet, due to the innovative housing design, relatively large components can be mounted inside.

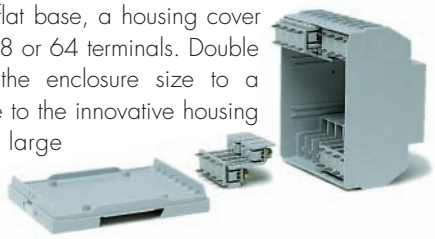

The terminals are machine solderable and have straight or right angle pins, depending on enclosure type (Type C has straight pins, Type B has right angle pins). We can also supply enclosures with fewer than the maximum number of terminals, please contact us with your requirements.

The KU4000 series are available in five widths, and are supplied with terminals in three standard positions:

- Terminals on top and bottom
- Terminals on one side only
- Terminals at both ends, the center area has no terminals.

Cover plugs are available as accessories and can be plugged into unused screw holes and wire entries. Plugs are offered as sets, consisting of one screw-hole cover and one wire entry cover *(Refer to Accessories in the Ordering Pages)*.

Integral printed circuit board guides are molded into the housing cover to save time when inserting boards. They also prevent misconnections and keep the boards from moving.

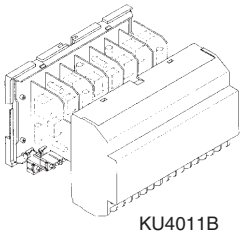

KU4011B

Printed circuit boards can be mounted in three ways:

- Horizontally, parallel with the base
- Vertically, perpendicular to the base
- Vertically, parallel with the DIN rail

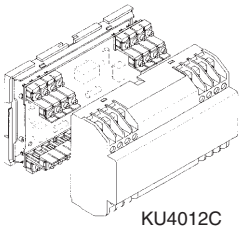

KU4012C

One large board can be mounted against the base of the enclosure (parallel with the base) using terminals with straight solder pins. Boards can also be mounted vertically (perpendicular to the base) by using terminals with right angle solder pins, or vertically (parallel with the DIN rail) by using a wire jumper connection.
*(Refer to the Ordering Pages)*.

The face of the cover is 45mm (1.77 in.) high, and can be mounted into standard DIN distribution systems which have 45mm cutouts like Altechs EK and AK series of industrial enclosures. Mount the KU4000 enclosures together with circuit breakers and other DIN rail mount devices which also meet the 45mm standard. Removal of the housing cover is possible for service and repair after disconnecting the wires. KU4000 covers cannot be potted without taking special steps.

EK Series Industrial Enclosure

## TERMINALS

Pressure plate terminals are standard for the KU4000 enclosure and ensure a vibration proof connection. The pressure plate, which is captive to the terminal screw, automatically rises when the screw is loosened. One or two wires of equal or different sizes up to 2.5mm$^2$ (14 AWG) can be terminated in each terminal. The grooved corners of the pressure plate ensure positive retention of the wires. The flat bottom of the terminal extends to the inside of the enclosure and provides the terminal-to-board connection. The terminal screws can be turned by a flat tip or a #2 Philips screwdriver.

The KU4000 series is also available with spring cage terminals. The terminal is opened by appling pressure with a screwdriver to open the clamp. Once the wire is inserted, the screwdriver is removed, creating a vibration proof connection to the wire.

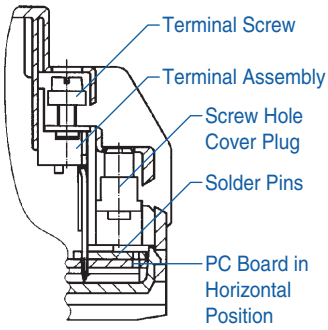


## TERMINAL-TO-BOARD CONNECTIONS

The KU4000 series offers several fixed terminal-to-board connection possibilities. (Refer to the Ordering Pages for connection types.)

***Wire Jumper*** connections can be made by soldering a wire jumper between the center hole of the right angle solder pins and the printed circuit board(s). Upon soldering, the board is installed into the enclosure complete with terminals and other components. All KU4000 terminals have Machine Solderable Pins, which can be machine soldered to the board(s) in the same step as the other components, saving assembly time.

## MOUNTING

The KU4000 enclosures snap onto standard 35mm DIN rail or can be panel mounted. Mount one or several enclosures together, or mix them with other DIN rail mounted devices such as terminal blocks, circuit breakers, etc. The choice is yours.

## MARKING

The KU4000 series have large marking areas on the front of the cover.

## ACCESSORIES

- Cover Plugs for Screw Hole and Wire Entries
- Screws for Mounting Printed Circuit Board
- Pull-Out Panel Mounting Tabs
- 35mm DIN Rail

## CUSTOMIZATION

We can supply the KU4000, series enclosure kits with the exact number of terminals to meet your requirements. Enclosures can also be customized with cutouts and holes. Custom colors and special markings are also available.

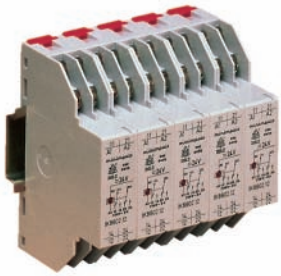

# Enclosure Mounting Procedures

## DIN Rail Mounting

The top of the enclosure base has notches molded onto the sides. The bottom of the base has one spring-loaded tab that is factory installed into a molded guide for DIN rail mounting.

When mounting, tilt the bottom of the enclosure slightly away from the rail until the notches grab onto the top flange of the DIN rail. Push the bottom of the enclosure forward towards the DIN rail. The spring-loaded tab will snap onto the bottom of the rail and hold the enclosure firmly in place.

To remove the enclosure from the DIN rail, insert a screwdriver into the exposed slot in the tab and pull the tab down. Pull enclosure forward and remove from the rail.

## Panel Mounting

To mount enclosures on a panel or any flat surface, at least one tab must be in place on the top and on the bottom of the enclosure base in the panel mount position. Standard enclosures are supplied with one tab on the bottom for DIN rail mounting.

Install one or more additional tabs *(see Accessories in the Ordering Pages)* into molded tab guides on the back of the enclosure base. Move the pre-installed bottom tab from the DIN rail position to the panel mount position.

To move the tab, insert a screwdriver under the spring pin, lift it and pull the tab forward until it extends approximately 6mm(.25 in.) from the enclosure. Release pin and lock the tab in the panel mount position.

We can supply the enclosures already set up for panel mounting if desired. *(Please specify when ordering)*.

## 8 Terminal

### Vertical PCB
### Screw Clamp

### TECHNICAL INFORMATION

**Electrical:**
16A, 300V, 22-14 AWG

**Housing Material:**
Glass-filled Polycarbonate

**Temperature Range:**
Up to 125°C (257°F)

**Flammability Rating:**
UL94 V-O

**Color:**
Light Gray

**Terminal Type:**
Screw / Pressure Plate

**Terminal Screw Size:**
M3.5

**Recommended Torque:**
0.8Nm

**Max. PCB's:**
(1) Vertical

**Mounting:**
35mm DIN Rail or optional panel mounting*

### ORDERING INFORMATION

| Part Number | Type | Description | PCB Connection |
|---|---|---|---|
| 91.201 | KU4001B | Right Angle Pins | Machine Solder/ Wire Jumper |

### ACCESSORIES

| Accessories | Part Number | Type |
|---|---|---|
| 1 Meter DIN Rail | 2511120/1M | TS35x7.5/1M |
| Screw-hole and Wire-Entry Cover Plug Set | 91.201.1 | SHPC |
| *Panel Mount Tab | 93.001.5 | PMA/KU |

### ENCLOSURE DRAWING (To convert to inches divide by 25.4.)

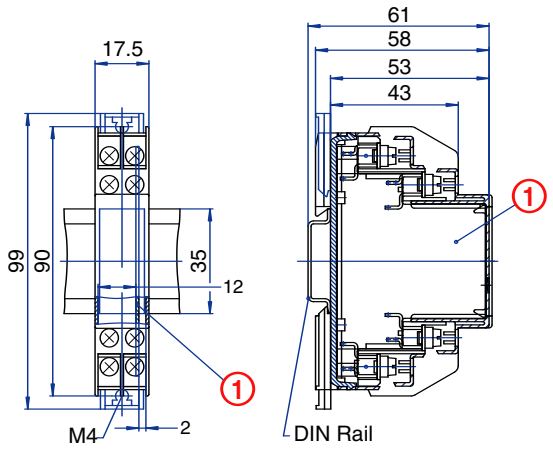


### PCB DRAWING (To convert to inches divide by 25.4.)

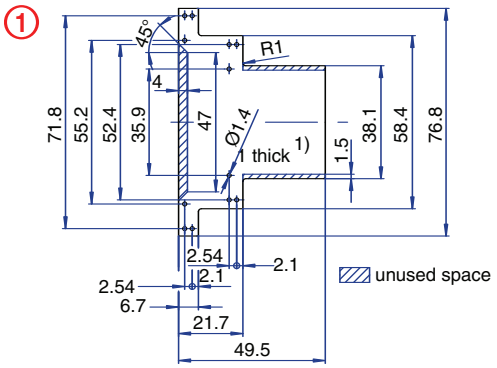


## 8 Terminal

### Horizontal PCB
### Screw Clamp

### TECHNICAL INFORMATION

**Electrical:**
16A, 300V, 22-14 AWG

**Housing Material:**
Glass-filled Polycarbonate

**Temperature Range:**
Up to 125°C (257°F)

**Flammability Rating:**
UL94 V-O

**Color:**
Light Gray

**Terminal Type:**
Screw / Pressure Plate

**Terminal Screw Size:**
M3.5

**Recommended Torque:**
0.8Nm

**Max. PCB's:**
(1) Horizontal

**Mounting:**
35mm DIN Rail or optional panel mounting*

### ORDERING INFORMATION

| Part Number | Type | Description | PCB Connection |
|---|---|---|---|
| 91.202 | KU4001C | Straight Pins | Machine Solder |

### ACCESSORIES

| Accessories | Part Number | Type |
|---|---|---|
| 1 Meter DIN Rail | 2511120/1M | TS35x7.5/1M |
| Screw-hole and Wire-Entry Cover Plug Set | 91.201.1 | SHPC |
| *Panel Mount Tab | 93.001.5 | PMA/KU |

### ENCLOSURE DRAWING (To convert to inches divide by 25.4.)

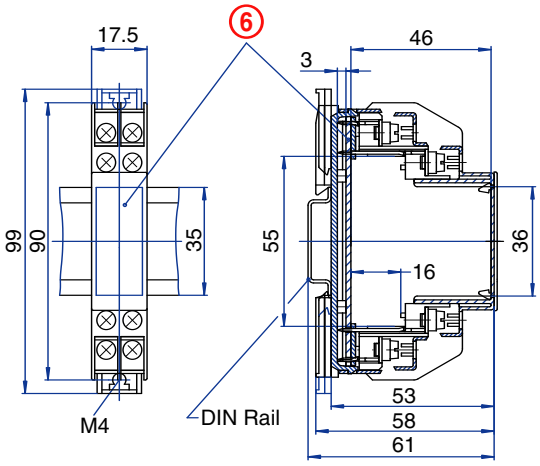


### PCB DRAWING (To convert to inches divide by 25.4.)

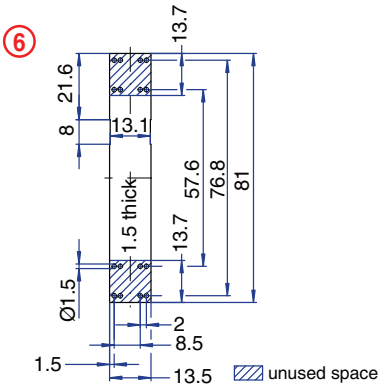

## 8 Terminal
### Vertical PCB
### Spring Clamp

### TECHNICAL INFORMATION

**Electrical:**
10A, 300V, 26-14 AWG

**Housing Material:**
Glass-filled Polycarbonate

**Temperature Range:**
Up to 125°C (257°F)

**Flammability Rating:**
UL94 V-O

**Color:**
Light Gray

**Terminal Type:**
Spring Cage Clamp

**Terminal Screw Size:**
–

**Recommended Torque:**
–

**Max. PCB's:**
(1) Vertical

**Mounting:**
35mm DIN Rail or optional panel mounting*

### ORDERING INFORMATION

| Part Number | Type | Description | PCB Connection |
|---|---|---|---|
| 91.501 | KU4037B | Right Angle Pins | Machine Solder/ Wire Jumper |

### ACCESSORIES

| Accessories | Part Number | Type |
|---|---|---|
| 1 Meter DIN Rail | 2511120/1M | TS35x7.5/1M |
| *Panel Mount Tab | 93.001.5 | PMA/KU |

### ENCLOSURE DRAWING (To convert to inches divide by 25.4.)

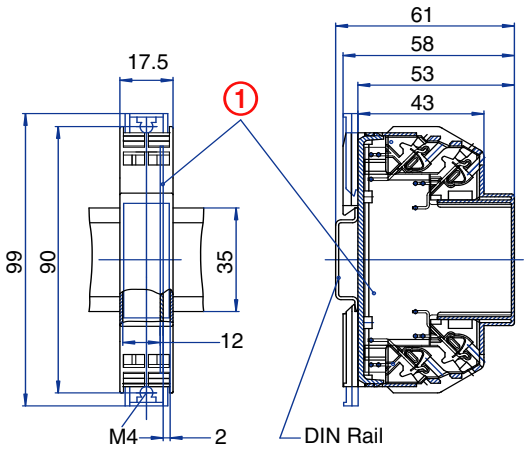


### PCB DRAWING (To convert to inches divide by 25.4.)

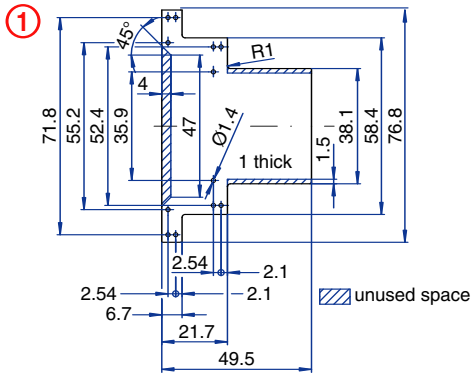


## 8 Terminal
### Horizontal PCB
### Spring Clamp

### TECHNICAL INFORMATION

**Electrical:**
10A, 300V, 26-14 AWG

**Housing Material:**
Glass-filled Polycarbonate

**Temperature Range:**
Up to 125°C (257°F)

**Flammability Rating:**
UL94 V-O

**Color:**
Light Gray

**Terminal Type:**
Spring Cage Clamp

**Terminal Screw Size:**
–

**Recommended Torque:**
–

**Max. PCB's:**
(1) Horizontal

**Mounting:**
35mm DIN Rail or optional panel mounting*

### ORDERING INFORMATION

| Part Number | Type | Description | PCB Connection |
|---|---|---|---|
| 91.502 | KU4037C | Straight Pins | Machine Solder |

### ACCESSORIES

| Accessories | Part Number | Type |
|---|---|---|
| 1 Meter DIN Rail | 2511120/1M | TS35x7.5/1M |
| *Panel Mount Tab | 93.001.5 | PMA/KU |

### ENCLOSURE DRAWING (To convert to inches divide by 25.4.)

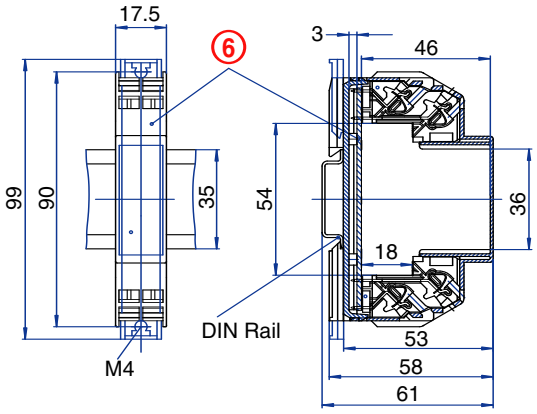


### PCB DRAWING (To convert to inches divide by 25.4.)

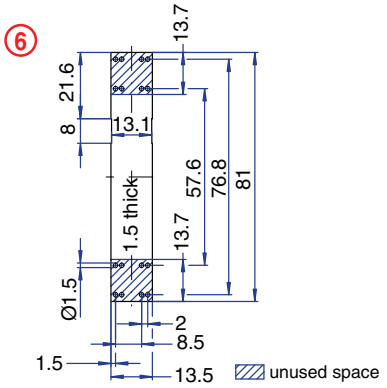

## 8 Terminal

### Tall Vertical PCB
### Screw Clamp

### TECHNICAL INFORMATION

**Electrical:**
16A, 300V, 22-14 AWG

**Housing Material:**
Glass-filled Polycarbonate

**Temperature Range:**
Up to 125°C (257°F)

**Flammability Rating:**
UL94 V-O

**Color:**
Light Gray

**Terminal Type:**
Screw / Pressure Plate

**Terminal Screw Size:**
M3.5

**Recommended Torque:**
0.8Nm

**Max. PCB's:**
(1) Vertical

**Mounting:**
35mm DIN Rail or optional panel mounting*

### ORDERING INFORMATION

| Part Number | Type | Description | PCB Connection |
|---|---|---|---|
| 91.203 | KU4001BT | Right Angle Pins | Machine Solder/ Wire Jumper |

### ACCESSORIES

| Accessories | Part Number | Type |
|---|---|---|
| 1 Meter DIN Rail | 2511120/1M | TS35x7.5/1M |
| Screw-hole and Wire-Entry Cover Plug Set | 91.201.1 | SHPC |
| *Panel Mount Tab | 93.001.5 | PMA/KU |

### ENCLOSURE DRAWING (To convert to inches divide by 25.4.)

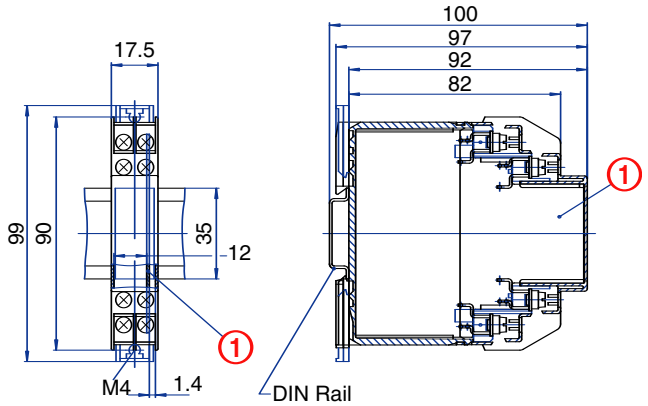


### PCB DRAWING (To convert to inches divide by 25.4.)

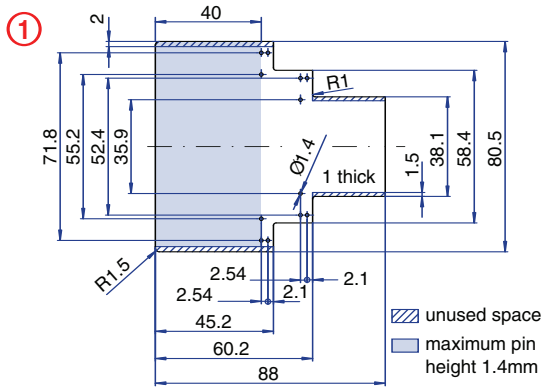


## 8 Terminal

### Tall Vertical PCB
### Spring Clamp

### TECHNICAL INFORMATION

**Electrical:**
10A, 300V, 26-14 AWG

**Housing Material:**
Glass-filled Polycarbonate

**Temperature Range:**
Up to 125°C (257°F)

**Flammability Rating:**
UL94 V-O

**Color:**
Light Gray

**Terminal Type:**
Spring Cage Clamp

**Terminal Screw Size:**
–

**Recommended Torque:**
–

**Max. PCB's:**
(1) Vertical

**Mounting:**
35mm DIN Rail or optional panel mounting*

### ORDERING INFORMATION

| Part Number | Type | Description | PCB Connection |
|---|---|---|---|
| 91.503 | KU4037BT | Right Angle Pins | Machine Solder/ Wire Jumper |

### ACCESSORIES

| Accessories | Part Number | Type |
|---|---|---|
| 1 Meter DIN Rail | 2511120/1M | TS35x7.5/1M |
| *Panel Mount Tab | 93.001.5 | PMA/KU |

### ENCLOSURE DRAWING (To convert to inches divide by 25.4.)

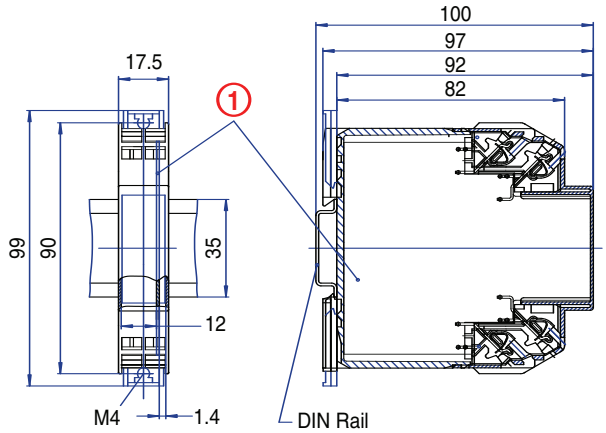


### PCB DRAWING (To convert to inches divide by 25.4.)

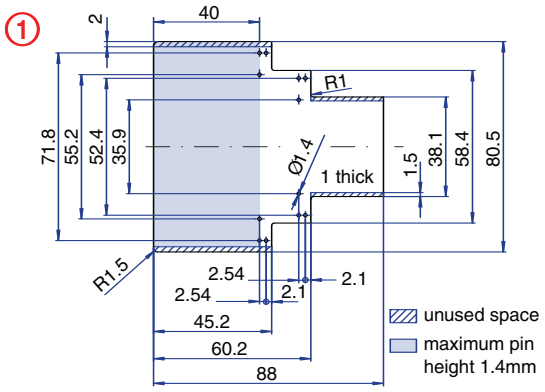

## 16 Terminal

### Vertical PCB
### Screw Clamp

### TECHNICAL INFORMATION

**Electrical:**
16A, 300V, 22-14 AWG

**Housing Material:**
Glass-filled Polycarbonate

**Temperature Range:**
Up to 125°C (257°F)

**Flammability Rating:**
UL94 V-O

**Color:**
Light Gray

**Terminal Type:**
Screw / Pressure Plate

**Terminal Screw Size:**
M3.5

**Recommended Torque:**
0.8Nm

**Max. PCB's:**
(2) Vertical

**Mounting:**
35mm DIN Rail or optional panel mounting*

### ORDERING INFORMATION

| Part Number | Type | Description | PCB Connection |
|---|---|---|---|
| 91.240 | KU4002B | Right Angle Pins | Machine Solder/ Wire Jumper |

### ACCESSORIES

| Accessories | Part Number | Type |
|---|---|---|
| 1 Meter DIN Rail | 2511120/1M | TS35x7.5/1M |
| Screw-hole and Wire-Entry Cover Plug Set | 91.201.1 | SHPC |
| *Panel Mount Tab | 93.001.5 | PMA/KU |

### ENCLOSURE DRAWING (To convert to inches divide by 25.4.)

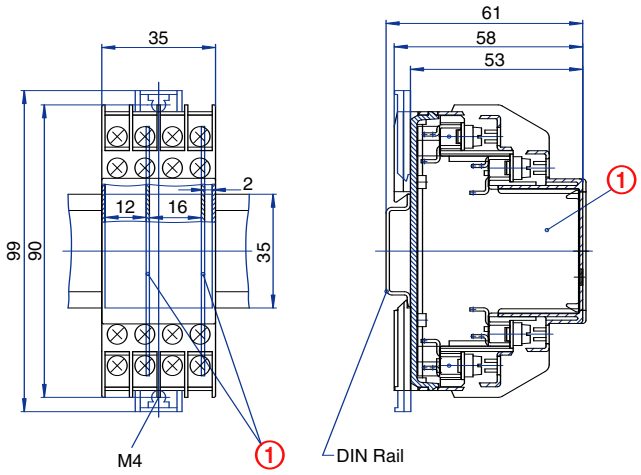


### PCB DRAWING (To convert to inches divide by 25.4.)

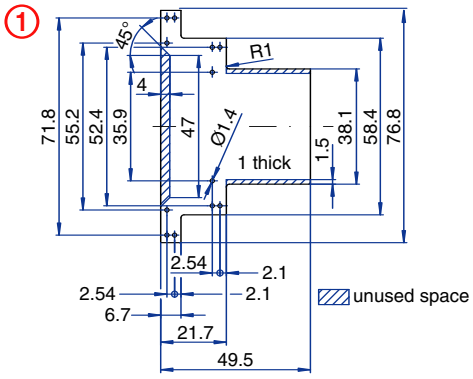


## 16 Terminal

### Horizontal PCB
### Screw Clamp

### TECHNICAL INFORMATION

**Electrical:**
16A, 300V, 22-14 AWG

**Housing Material:**
Glass-filled Polycarbonate

**Temperature Range:**
Up to 125°C (257°F)

**Flammability Rating:**
UL94 V-O

**Color:**
Light Gray

**Terminal Type:**
Screw / Pressure Plate

**Terminal Screw Size:**
M3.5

**Recommended Torque:**
0.8Nm

**Max. PCB's:**
(1) Horizontal

**Mounting:**
35mm DIN Rail or optional panel mounting*

### ORDERING INFORMATION

| Part Number | Type | Description | PCB Connection |
|---|---|---|---|
| 91.220 | KU4002C | Straight Pins | Machine Solder |

### ACCESSORIES

| Accessories | Part Number | Type |
|---|---|---|
| 1 Meter DIN Rail | 2511120/1M | TS35x7.5/1M |
| Screw-hole and Wire-Entry Cover Plug Set | 91.201.1 | SHPC |
| *Panel Mount Tab | 93.001.5 | PMA/KU |

### ENCLOSURE DRAWING (To convert to inches divide by 25.4.)

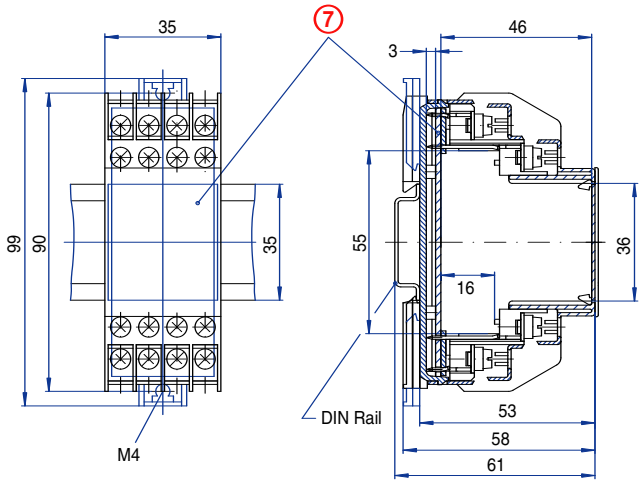


### PCB DRAWING (To convert to inches divide by 25.4.)

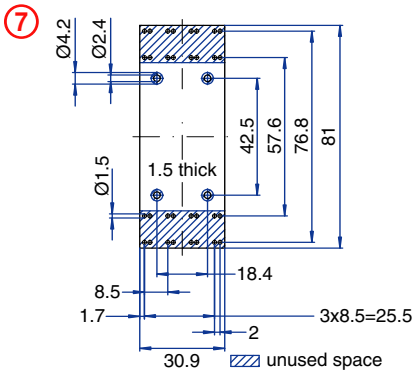

## 16 Terminal

### Vertical PCB
### Spring Clamp

### TECHNICAL INFORMATION

**Electrical:**
10A, 300V, 26-14 AWG

**Housing Material:**
Glass-filled Polycarbonate

**Temperature Range:**
Up to 125°C (257°F)

**Flammability Rating:**
UL94 V-O

**Color:**
Light Gray

**Terminal Type:**
Spring Cage Clamp

**Terminal Screw Size:**
–

**Recommended Torque:**
–

**Max. PCB's:**
(2) Vertical

**Mounting:**
35mm DIN Rail or optional panel mounting*

### ORDERING INFORMATION

| Part Number | Type | Description | PCB Connection |
|---|---|---|---|
| 91.540 | KU4038B | Right Angle Pins | Machine Solder/ Wire Jumper |

### ACCESSORIES

| Accessories | Part Number | Type |
|---|---|---|
| 1 Meter DIN Rail | 2511120/1M | TS35x7.5/1M |
| *Panel Mount Tab | 93.001.5 | PMA/KU |

### ENCLOSURE DRAWING (To convert to inches divide by 25.4.)

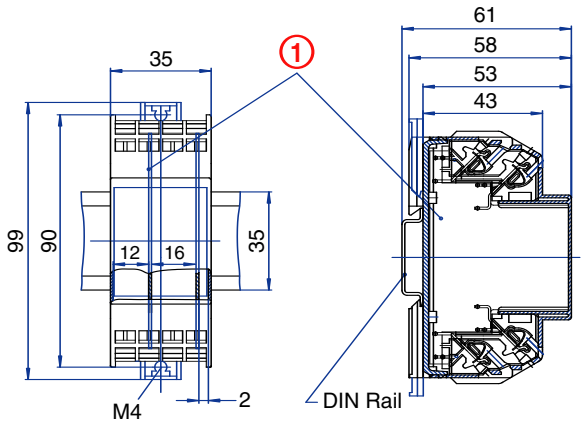


### PCB DRAWING (To convert to inches divide by 25.4.)

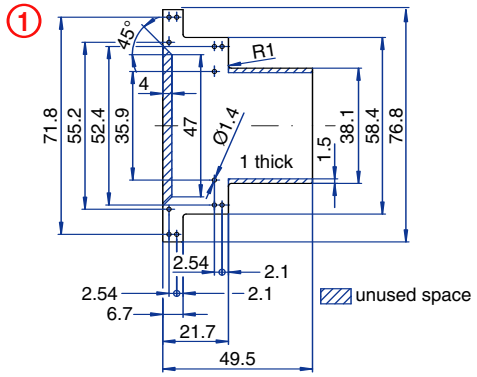


## 16 Terminal

### Horizontal PCB
### Spring Clamp

### TECHNICAL INFORMATION

**Electrical:**
10A, 300V, 26-14 AWG

**Housing Material:**
Glass-filled Polycarbonate

**Temperature Range:**
Up to 125°C (257°F)

**Flammability Rating:**
UL94 V-O

**Color:**
Light Gray

**Terminal Type:**
Spring Cage Clamp

**Terminal Screw Size:**
–

**Recommended Torque:**
–

**Max. PCB's:**
(1) Horizontal

**Mounting:**
35mm DIN Rail or optional panel mounting*

### ORDERING INFORMATION

| Part Number | Type | Description | PCB Connection |
|---|---|---|---|
| 91.520 | KU4038C | Straight Pins | Machine Solder |

### ACCESSORIES

| Accessories | Part Number | Type |
|---|---|---|
| 1 Meter DIN Rail | 2511120/1M | TS35x7.5/1M |
| *Panel Mount Tab | 93.001.5 | PMA/KU |

### ENCLOSURE DRAWING (To convert to inches divide by 25.4.)

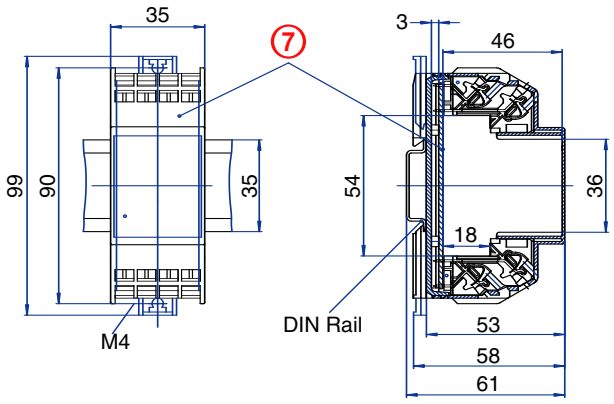


### PCB DRAWING (To convert to inches divide by 25.4.)

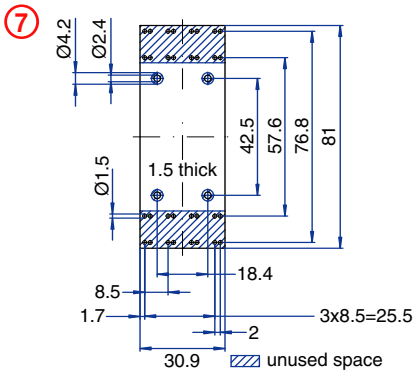

## 16 Terminal

### Tall Vertical PCB
### Screw Clamp

### TECHNICAL INFORMATION

**Electrical:**
16A, 300V, 22-14 AWG

**Housing Material:**
Glass-filled Polycarbonate

**Temperature Range:**
Up to 125°C (257°F)

**Flammability Rating:**
UL94 V-O

**Color:**
Light Gray

**Terminal Type:**
Screw / Pressure Plate

**Terminal Screw Size:**
M3.5

**Recommended Torque:**
0.8Nm

**Max. PCB's:**
(2) Vertical

**Mounting:**
35mm DIN Rail or optional panel mounting*

### ORDERING INFORMATION

| Part Number | Type | Description | PCB Connection |
|---|---|---|---|
| 91.243 | KU4002BT | Right Angle Pins | Machine Solder/ Wire Jumper |

### ACCESSORIES

| Accessories | Part Number | Type |
|---|---|---|
| 1 Meter DIN Rail | 2511120/1M | TS35x7.5/1M |
| Screw-hole and Wire-Entry Cover Plug Set | 91.201.1 | SHPC |
| *Panel Mount Tab | 93.001.5 | PMA/KU |

### ENCLOSURE DRAWING (To convert to inches divide by 25.4.)

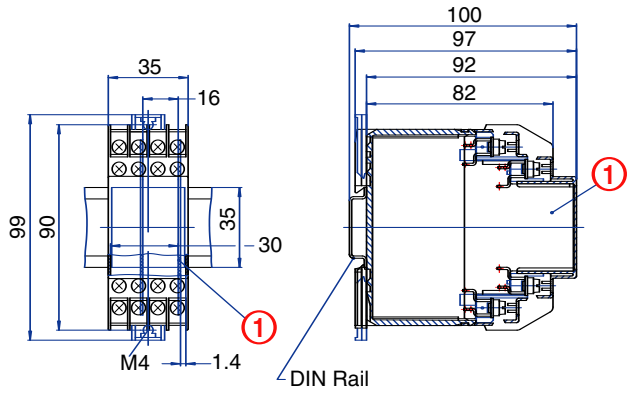


### PCB DRAWING (To convert to inches divide by 25.4.)

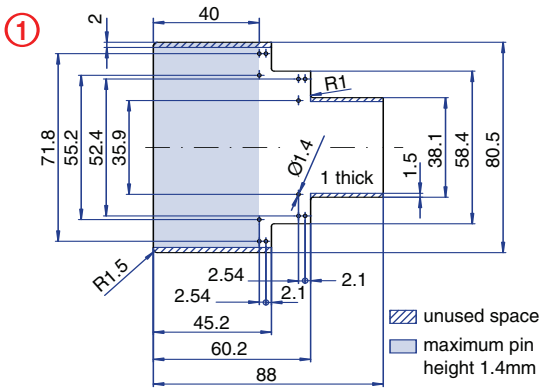


## 16 Terminal

### Tall Vertical PCB
### Spring Clamp

### TECHNICAL INFORMATION

**Electrical:**
10A, 300V, 26-14 AWG

**Housing Material:**
Glass-filled Polycarbonate

**Temperature Range:**
Up to 125°C (257°F)

**Flammability Rating:**
UL94 V-O

**Color:**
Light Gray

**Terminal Type:**
Spring Cage Clamp

**Terminal Screw Size:**
–

**Recommended Torque:**
–

**Max. PCB's:**
(2) Vertical

**Mounting:**
35mm DIN Rail or optional panel mounting*

### ORDERING INFORMATION

| Part Number | Type | Description | PCB Connection |
|---|---|---|---|
| 91.543 | KU4038BT | Right Angle Pins | Machine Solder/ Wire Jumper |

### ACCESSORIES

| Accessories | Part Number | Type |
|---|---|---|
| 1 Meter DIN Rail | 2511120/1M | TS35x7.5/1M |
| *Panel Mount Tab | 93.001.5 | PMA/KU |

### ENCLOSURE DRAWING (To convert to inches divide by 25.4.)

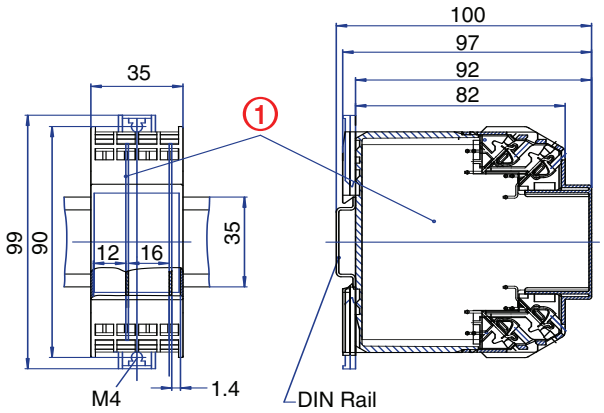


### PCB DRAWING (To convert to inches divide by 25.4.)

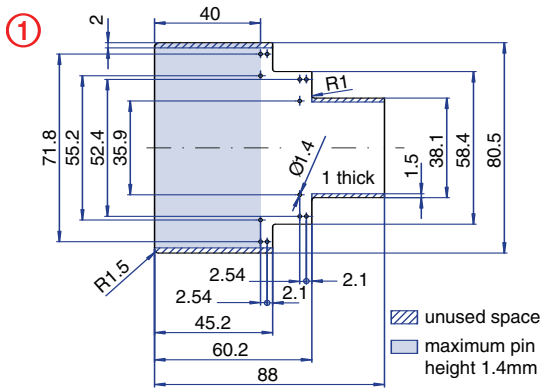

## 32 Terminal

### Vertical PCB
### Screw Clamp

### TECHNICAL INFORMATION

**Electrical:**
16A, 300V, 22-14 AWG
**Housing Material:**
Glass-filled Polycarbonate
**Temperature Range:**
Up to 125°C (257°F)
**Flammability Rating:**
UL94 V-O
**Color:**
Light Gray

**Terminal Type:**
Screw / Pressure Plate
**Terminal Screw Size:**
M3.5
**Recommended Torque:**
0.8Nm
**Max. PCB's:**
(4) Vertical
**Mounting:**
35mm DIN Rail or optional panel mounting*

### ORDERING INFORMATION

| Part Number | Type | Description | PCB Connection |
|---|---|---|---|
| 91.280 | KU4003B | Right Angle Pins | Machine Solder/ Wire Jumper |

### ACCESSORIES

| Accessories | Part Number | Type |
|---|---|---|
| 1 Meter DIN Rail | 2511120/1M | TS35x7.5/1M |
| Screw-hole and Wire-Entry Cover Plug Set | 91.201.1 | SHPC |
| *Panel Mount Tab | 93.001.5 | PMA/KU |

### ENCLOSURE DRAWING (To convert to inches divide by 25.4.)

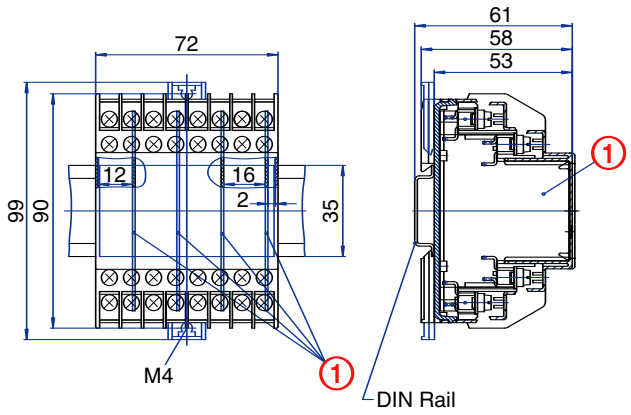


### PCB DRAWING (To convert to inches divide by 25.4.)

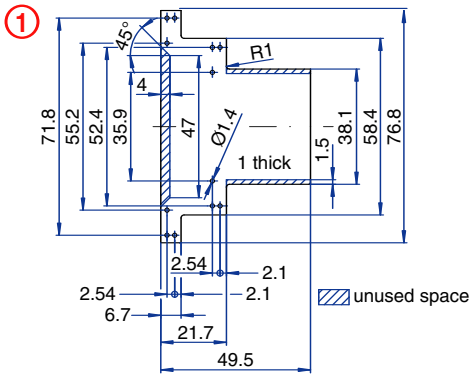


## 32 Terminal

### Horizontal PCB
### Screw Clamp

### TECHNICAL INFORMATION

**Electrical:**
16A, 300V, 22-14 AWG
**Housing Material:**
Glass-filled Polycarbonate
**Temperature Range:**
Up to 125°C (257°F)
**Flammability Rating:**
UL94 V-O
**Color:**
Light Gray

**Terminal Type:**
Screw / Pressure Plate
**Terminal Screw Size:**
M3.5
**Recommended Torque:**
0.8Nm
**Max. PCB's:**
(1) Horizontal, (2) Vertical
**Mounting:**
35mm DIN Rail or optional panel mounting*

### ORDERING INFORMATION

| Part Number | Type | Description | PCB Connection |
|---|---|---|---|
| 91.260 | KU4003C | Straight Pins | Machine Solder |

### ACCESSORIES

| Accessories | Part Number | Type |
|---|---|---|
| 1 Meter DIN Rail | 2511120/1M | TS35x7.5/1M |
| Screw-hole and Wire-Entry Cover Plug Set | 91.201.1 | SHPC |
| *Panel Mount Tab | 93.001.5 | PMA/KU |

### ENCLOSURE DRAWING (To convert to inches divide by 25.4.)

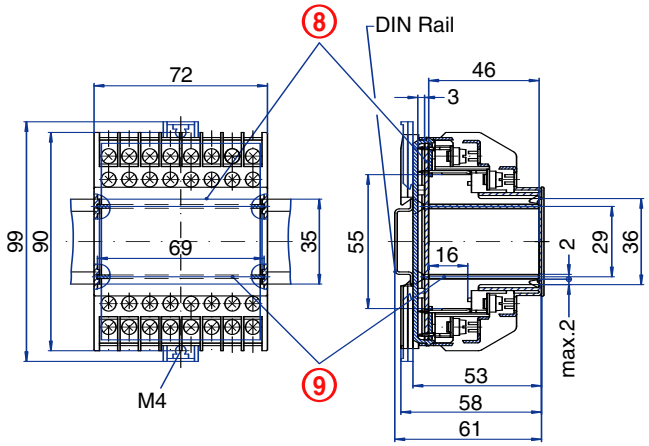


### PCB DRAWING (To convert to inches divide by 25.4.)

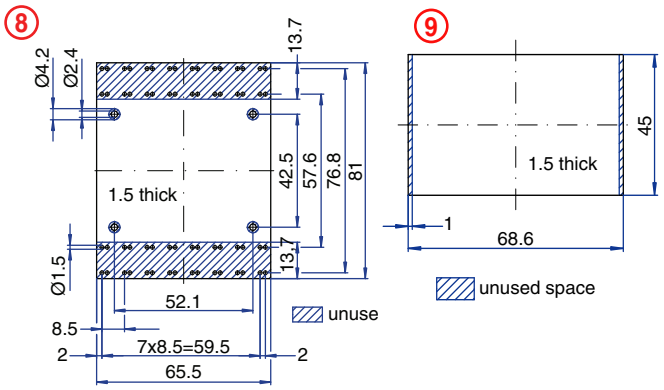

## 32 Terminal

### Vertical PCB
### Spring Clamp

### TECHNICAL INFORMATION

**Electrical:**
10A, 300V, 26-14 AWG

**Housing Material:**
Glass-filled Polycarbonate

**Temperature Range:**
Up to 125°C (257°F)

**Flammability Rating:**
UL94 V-O

**Color:**
Light Gray

**Terminal Type:**
Spring Cage Clamp

**Terminal Screw Size:**
–

**Recommended Torque:**
–

**Max. PCB's:**
(4) Vertical

**Mounting:**
35mm DIN Rail or optional panel mounting*

### ORDERING INFORMATION

| Part Number | Type | Description | PCB Connection |
|---|---|---|---|
| 91.580 | KU4039B | Right Angle Pins | Machine Solder/ Wire Jumper |

### ACCESSORIES

| Accessories | Part Number | Type |
|---|---|---|
| 1 Meter DIN Rail | 2511120/1M | TS35x7.5/1M |
| *Panel Mount Tab | 93.001.5 | PMA/KU |

### ENCLOSURE DRAWING (To convert to inches divide by 25.4.)

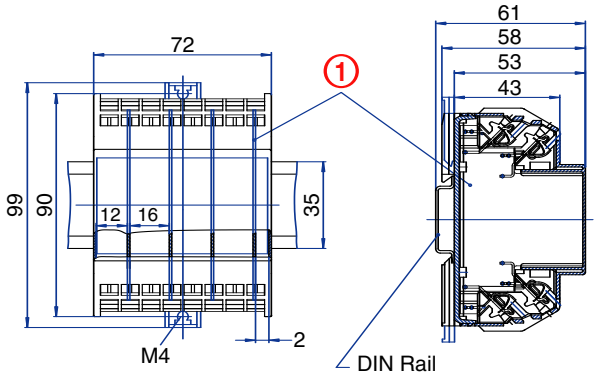


### PCB DRAWING (To convert to inches divide by 25.4.)

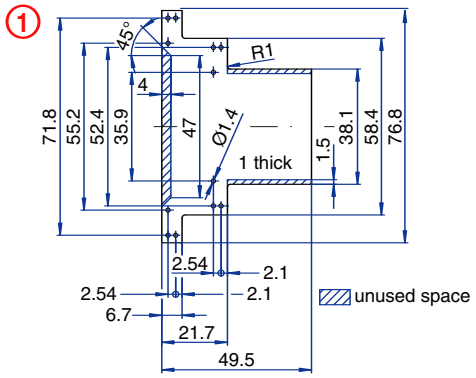


## 32 Terminal

### Horizontal PCB
### Spring Clamp

### TECHNICAL INFORMATION

**Electrical:**
10A, 300V, 26-14 AWG

**Housing Material:**
Glass-filled Polycarbonate

**Temperature Range:**
Up to 125°C (257°F)

**Flammability Rating:**
UL94 V-O

**Color:**
Light Gray

**Terminal Type:**
Spring Cage Clamp

**Terminal Screw Size:**
–

**Recommended Torque:**
–

**Max. PCB's:**
(1) Horizontal

**Mounting:**
35mm DIN Rail or optional panel mounting*

### ORDERING INFORMATION

| Part Number | Type | Description | PCB Connection |
|---|---|---|---|
| 91.560 | KU4039C | Straight Pins | Machine Solder |

### ACCESSORIES

| Accessories | Part Number | Type |
|---|---|---|
| 1 Meter DIN Rail | 2511120/1M | TS35x7.5/1M |
| *Panel Mount Tab | 93.001.5 | PMA/KU |

### ENCLOSURE DRAWING (To convert to inches divide by 25.4.)

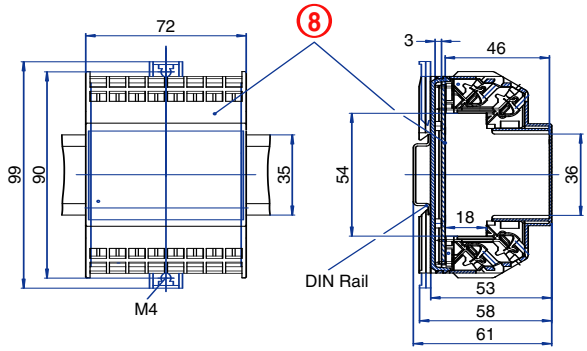


### PCB DRAWING (To convert to inches divide by 25.4.)

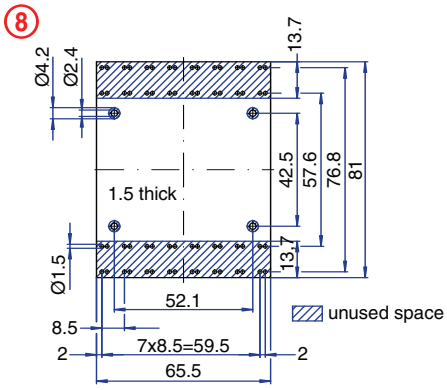

## 32 Terminal

### Tall Vertical
### PCB Screw Clamp

### TECHNICAL INFORMATION

**Electrical:**
16A, 300V, 22-14 AWG

**Housing Material:**
Glass-filled Polycarbonate

**Temperature Range:**
Up to 125°C (257°F)

**Flammability Rating:**
UL94 V-O

**Color:**
Light Gray

**Terminal Type:**
Screw / Pressure Plate

**Terminal Screw Size:**
M3.5

**Recommended Torque:**
0.8Nm

**Max. PCB's:**
(4) Vertical

**Mounting:**
35mm DIN Rail or optional panel mounting*

### ORDERING INFORMATION

| Part Number | Type | Description | PCB Connection |
|---|---|---|---|
| 91.283 | KU4003BT | Right Angle Pins | Machine Solder/ Wire Jumper |

### ACCESSORIES

| Accessories | Part Number | Type |
|---|---|---|
| 1 Meter DIN Rail | 2511120/1M | TS35x7.5/1M |
| Screw-hole and Wire-Entry Cover Plug Set | 91.201.1 | SHPC |
| *Panel Mount Tab | 93.001.5 | PMA/KU |

### ENCLOSURE DRAWING (To convert to inches divide by 25.4.)

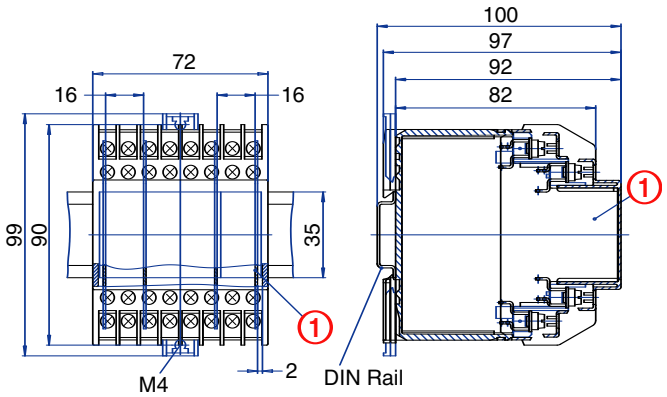


### PCB DRAWING (To convert to inches divide by 25.4.)

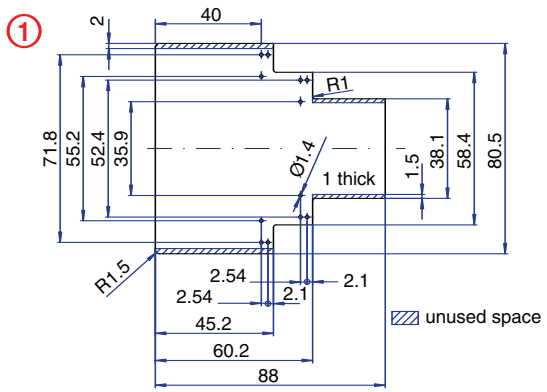


## 32 Terminal

### Tall Vertical
### PCB Spring Clamp

### TECHNICAL INFORMATION

**Electrical:**
10A, 300V, 26-14 AWG

**Housing Material:**
Glass-filled Polycarbonate

**Temperature Range:**
Up to 125°C (257°F)

**Flammability Rating:**
UL94 V-O

**Color:**
Light Gray

**Terminal Type:**
Spring Cage Clamp

**Terminal Screw Size:**
–

**Recommended Torque:**
–

**Max. PCB's:**
(4) Vertical

**Mounting:**
35mm DIN Rail or optional panel mounting*

### ORDERING INFORMATION

| Part Number | Type | Description | PCB Connection |
|---|---|---|---|
| 91.583 | KU4039BT | Right Angle Pins | Machine Solder/ Wire Jumper |

### ACCESSORIES

| Accessories | Part Number | Type |
|---|---|---|
| 1 Meter DIN Rail | 2511120/1M | TS35x7.5/1M |
| *Panel Mount Tab | 93.001.5 | PMA/KU |

### ENCLOSURE DRAWING (To convert to inches divide by 25.4.)

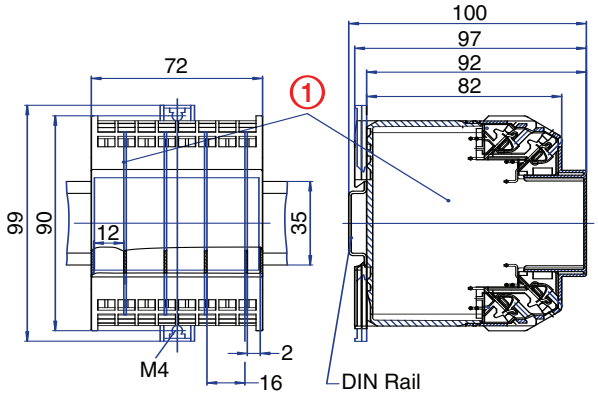


### PCB DRAWING (To convert to inches divide by 25.4.)

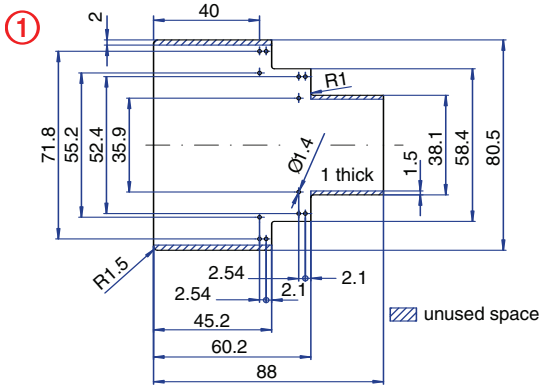

## 16 Terminal
### Vertical PCB
### Screw Clamp

### TECHNICAL INFORMATION

**Electrical:**
16A, 300V, 22-14 AWG

**Housing Material:**
Glass-filled Polycarbonate

**Temperature Range:**
Up to 125°C (257°F)

**Flammability Rating:**
UL94 V-O

**Color:**
Light Gray

**Terminal Type:**
Screw / Pressure Plate

**Terminal Screw Size:**
M3.5

**Recommended Torque:**
0.8Nm

**Max. PCB's:**
(2) Vertical

**Mounting:**
35mm DIN Rail or optional panel mounting*

### ORDERING INFORMATION

| Part Number | Type | Description | PCB Connection |
|---|---|---|---|
| 91.250 | KU4090B16 | Right Angle Pins | Machine Solder/ Wire Jumper |

### ACCESSORIES

| Accessories | Part Number | Type |
|---|---|---|
| 1 Meter DIN Rail | 2511120/1M | TS35x7.5/1M |
| Screw-hole and Wire-Entry Cover Plug Set | 91.201.1 | SHPC |
| *Panel Mount Tab | 93.001.5 | PMA/KU |

### ENCLOSURE DRAWING (To convert to inches divide by 25.4.)

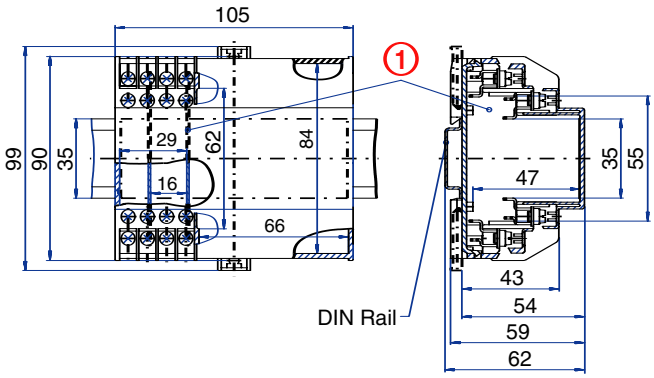


### PCB DRAWING (To convert to inches divide by 25.4.)

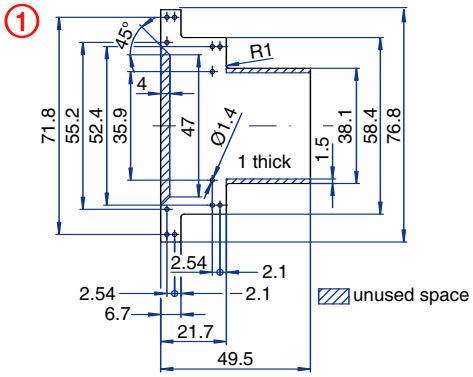


## 16 Terminal
### Horizontal PCB
### Screw Clamp

### TECHNICAL INFORMATION

**Electrical:**
16A, 300V, 22-14 AWG

**Housing Material:**
Glass-filled Polycarbonate

**Temperature Range:**
Up to 125°C (257°F)

**Flammability Rating:**
UL94 V-O

**Color:**
Light Gray

**Terminal Type:**
Screw / Pressure Plate

**Terminal Screw Size:**
M3.5

**Recommended Torque:**
0.8Nm

**Max. PCB's:**
(1) Horizontal, (2) Vertical

**Mounting:**
35mm DIN Rail or optional panel mounting*

### ORDERING INFORMATION

| Part Number | Type | Description | PCB Connection |
|---|---|---|---|
| 91.230 | KU4090C16 | Straight Pins | Machine Solder |

### ACCESSORIES

| Accessories | Part Number | Type |
|---|---|---|
| 1 Meter DIN Rail | 2511120/1M | TS35x7.5/1M |
| Screw-hole and Wire-Entry Cover Plug Set | 91.201.1 | SHPC |
| *Panel Mount Tab | 93.001.5 | PMA/KU |

### ENCLOSURE DRAWING (To convert to inches divide by 25.4.)

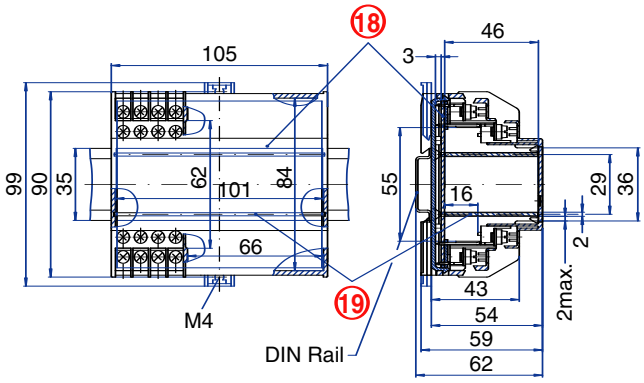


### PCB DRAWING (To convert to inches divide by 25.4.)

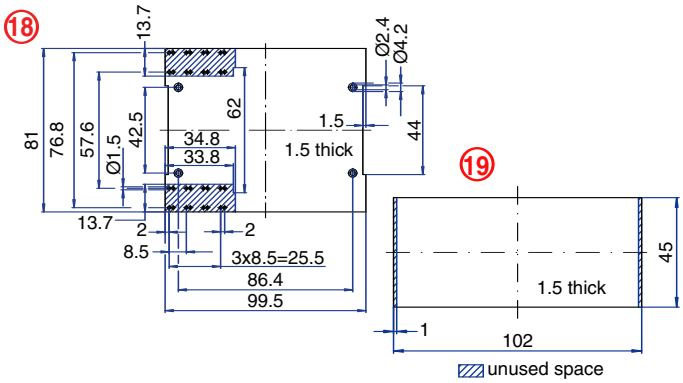

## 16 Terminal

**Vertical PCB**
**Screw Clamp**
**with vent slots**

### TECHNICAL INFORMATION

**Electrical:**
16A, 300V, 22-14 AWG
**Housing Material:**
Glass-filled Polycarbonate
**Temperature Range:**
Up to 125°C (257°F)
**Flammability Rating:**
UL94 V-O
**Color:**
Light Gray

**Terminal Type:**
Screw / Pressure Plate
**Terminal Screw Size:**
M3.5
**Recommended Torque:**
0.8Nm
**Max. PCB's:**
(3) Vertical
**Mounting:**
35mm DIN Rail or optional panel mounting*

### ORDERING INFORMATION

| Part Number | Type | Description | PCB Connection |
|---|---|---|---|
| 91.255 | KU4090B16V | Right Angle Pins | Machine Solder/ Wire Jumper |

### ACCESSORIES

| Accessories | Part Number | Type |
|---|---|---|
| 1 Meter DIN Rail | 2511120/1M | TS35x7.5/1M |
| Screw-hole and Wire-Entry Cover Plug Set | 91.201.1 | SHPC |
| *Panel Mount Tab | 93.001.5 | PMA/KU |

### ENCLOSURE DRAWING (To convert to inches divide by 25.4.)

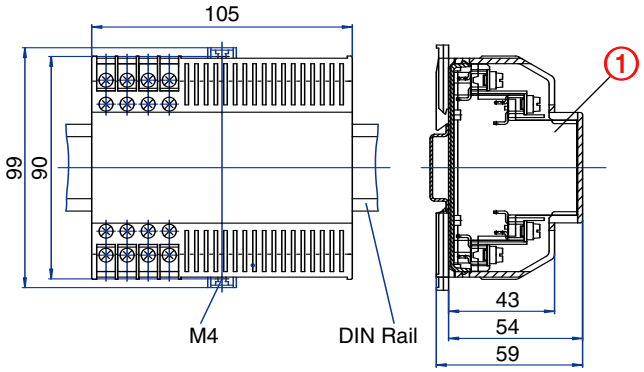


### PCB DRAWING (To convert to inches divide by 25.4.)

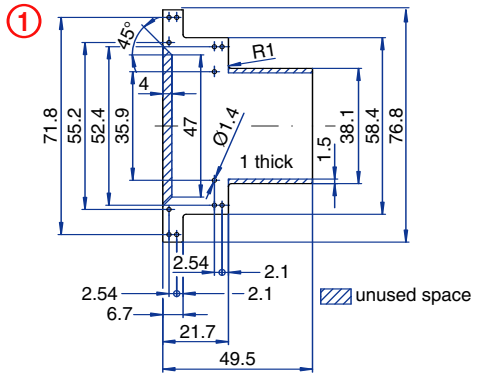


## 16 Terminal

**Horizontal PCB**
**Screw Clamp**
**with vent slots**

### TECHNICAL INFORMATION

**Electrical:**
16A, 300V, 22-14 AWG
**Housing Material:**
Glass-filled Polycarbonate
**Temperature Range:**
Up to 125°C (257°F)
**Flammability Rating:**
UL94 V-O
**Color:**
Light Gray

**Terminal Type:**
Screw / Pressure Plate
**Terminal Screw Size:**
M3.5
**Recommended Torque:**
0.8Nm
**Max. PCB's:**
(1) Horizontal, (2) Vertical
**Mounting:**
35mm DIN Rail or optional panel mounting*

### ORDERING INFORMATION

| Part Number | Type | Description | PCB Connection |
|---|---|---|---|
| 91.235 | KU4090C16V | Straight Pins | Machine Solder |

### ACCESSORIES

| Accessories | Part Number | Type |
|---|---|---|
| 1 Meter DIN Rail | 2511120/1M | TS35x7.5/1M |
| Screw-hole and Wire-Entry Cover Plug Set | 91.201.1 | SHPC |
| *Panel Mount Tab | 93.001.5 | PMA/KU |

### ENCLOSURE DRAWING (To convert to inches divide by 25.4.)

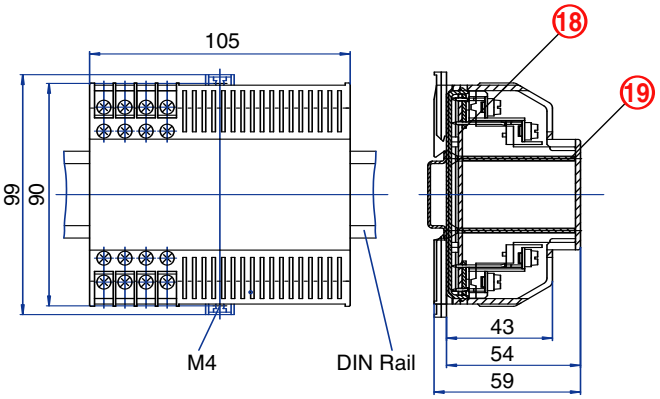


### PCB DRAWING (To convert to inches divide by 25.4.)

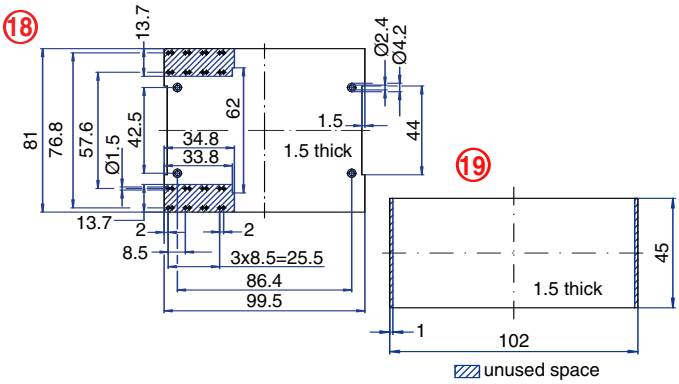

## 24 Terminal

### Vertical PCB
### Screw Clamp

### TECHNICAL INFORMATION

**Electrical:**
16A, 300V, 22-14 AWG

**Housing Material:**
Glass-filled Polycarbonate

**Temperature Range:**
Up to 125°C (257°F)

**Flammability Rating:**
UL94 V-O

**Color:**
Light Gray

**Terminal Type:**
Screw / Pressure Plate

**Terminal Screw Size:**
M3.5

**Recommended Torque:**
0.8Nm

**Max. PCB's:**
(6) Vertical

**Mounting:**
35mm DIN Rail or optional panel mounting*

### ORDERING INFORMATION

| Part Number | Type | Description | PCB Connection |
|---|---|---|---|
| 91.290 | KU4090B24 | Right Angle Pins | Machine Solder/ Wire Jumper |

### ACCESSORIES

| Accessories | Part Number | Type |
|---|---|---|
| 1 Meter DIN Rail | 2511120/1M | TS35x7.5/1M |
| Screw-hole and Wire-Entry Cover Plug Set | 91.201.1 | SHPC |
| *Panel Mount Tab | 93.001.5 | PMA/KU |

### ENCLOSURE DRAWING (To convert to inches divide by 25.4.)

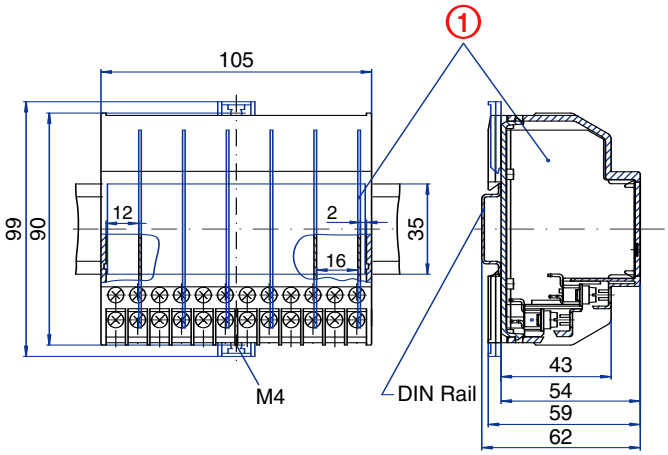


### PCB DRAWING (To convert to inches divide by 25.4.)

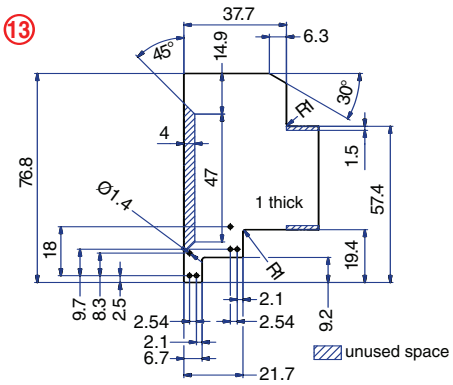


## 24 Terminal

### Horizontal PCB
### Screw Clamp

### TECHNICAL INFORMATION

**Electrical:**
16A, 300V, 22-14 AWG

**Housing Material:**
Glass-filled Polycarbonate

**Temperature Range:**
Up to 125°C (257°F)

**Flammability Rating:**
UL94 V-O

**Color:**
Light Gray

**Terminal Type:**
Screw / Pressure Plate

**Terminal Screw Size:**
M3.5

**Recommended Torque:**
0.8Nm

**Max. PCB's:**
(1) Horizontal (2) Vertical

**Mounting:**
35mm DIN Rail or optional panel mounting*

### ORDERING INFORMATION

| Part Number | Type | Description | PCB Connection |
|---|---|---|---|
| 91.270 | KU4090C24 | Straight Pins | Machine Solder |

### ACCESSORIES

| Accessories | Part Number | Type |
|---|---|---|
| 1 Meter DIN Rail | 2511120/1M | TS35x7.5/1M |
| Screw-hole and Wire-Entry Cover Plug Set | 91.201.1 | SHPC |
| *Panel Mount Tab | 93.001.5 | PMA/KU |

### ENCLOSURE DRAWING (To convert to inches divide by 25.4.)

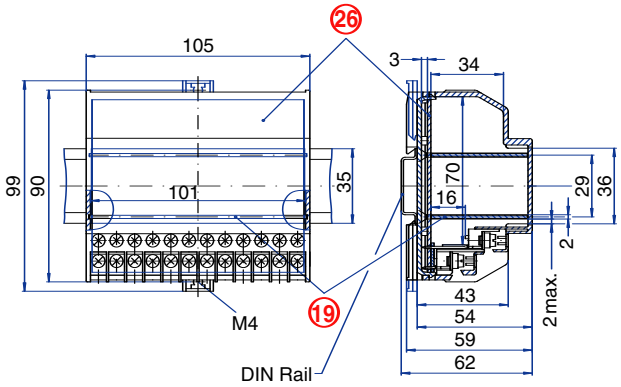


### PCB DRAWING (To convert to inches divide by 25.4.)

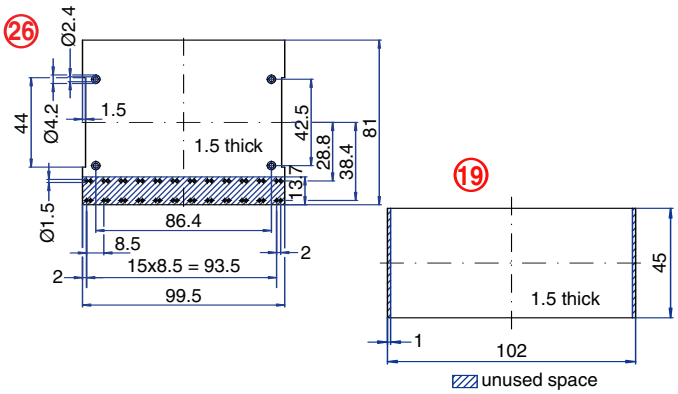

## 48 Terminal

### Vertical PCB Screw Clamp

### TECHNICAL INFORMATION

**Electrical:**
16A, 300V, 22-14 AWG

**Housing Material:**
Glass-filled Polycarbonate

**Temperature Range:**
Up to 125°C (257°F)

**Flammability Rating:**
UL94 V-O

**Color:**
Light Gray

**Terminal Type:**
Screw / Pressure Plate

**Terminal Screw Size:**
M3.5

**Recommended Torque:**
0.8Nm

**Max. PCB's:**
(6) Vertical

**Mounting:**
35mm DIN Rail or optional panel mounting*

### ORDERING INFORMATION

| Part Number | Type | Description | PCB Connection |
|---|---|---|---|
| 91.330 | KU4090B48 | Right Angle Pins | Machine Solder/ Wire Jumper |

### ACCESSORIES

| Accessories | Part Number | Type |
|---|---|---|
| 1 Meter DIN Rail | 2511120/1M | TS35x7.5/1M |
| Screw-hole and Wire-Entry Cover Plug Set | 91.201.1 | SHPC |
| *Panel Mount Tab | 93.001.5 | PMA/KU |

### ENCLOSURE DRAWING (To convert to inches divide by 25.4.)

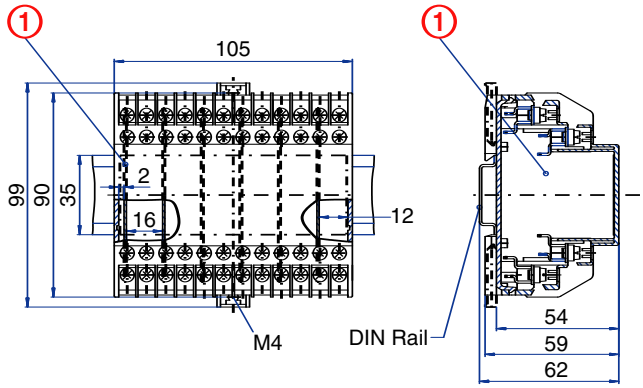


### PCB DRAWING (To convert to inches divide by 25.4.)

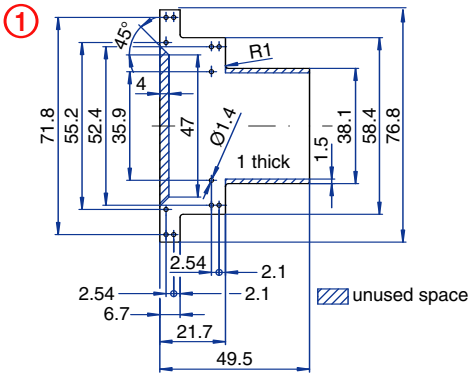


## 48 Terminal

### Horizontal PCB Screw Clamp

### TECHNICAL INFORMATION

**Electrical:**
16A, 300V, 22-14 AWG

**Housing Material:**
Glass-filled Polycarbonate

**Temperature Range:**
Up to 125°C (257°F)

**Flammability Rating:**
UL94 V-O

**Color:**
Light Gray

**Terminal Type:**
Screw / Pressure Plate

**Terminal Screw Size:**
M3.5

**Recommended Torque:**
0.8Nm

**Max. PCB's:**
(1) Horizontal, (2) Vertical

**Mounting:**
35mm DIN Rail or optional panel mounting*

### ORDERING INFORMATION

| Part Number | Type | Description | PCB Connection |
|---|---|---|---|
| 91.310 | KU4090C48 | Straight Pins | Machine Solder |

### ACCESSORIES

| Accessories | Part Number | Type |
|---|---|---|
| 1 Meter DIN Rail | 2511120/1M | TS35x7.5/1M |
| Screw-hole and Wire-Entry Cover Plug Set | 91.201.1 | SHPC |
| *Panel Mount Tab | 93.001.5 | PMA/KU |

### ENCLOSURE DRAWING (To convert to inches divide by 25.4.)

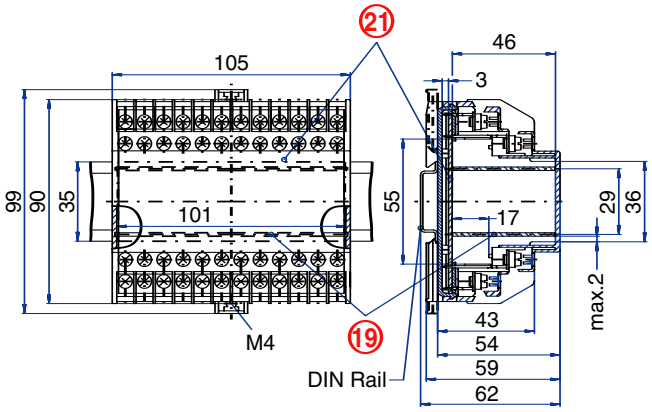


### PCB DRAWING (To convert to inches divide by 25.4.)

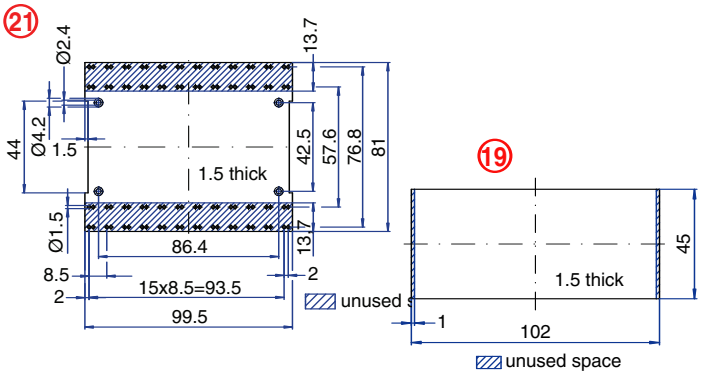

## 48 Terminal

### Vertical PCB
### Spring Clamp

### TECHNICAL INFORMATION

**Electrical:**
10A, 300V, 26-14 AWG

**Housing Material:**
Glass-filled Polycarbonate

**Temperature Range:**
Up to 125°C (257°F)

**Flammability Rating:**
UL94 V-O

**Color:**
Light Gray

**Terminal Type:**
Spring Cage Clamp

**Terminal Screw Size:**
–

**Recommended Torque:**
–

**Max. PCB's:**
(6) Vertical

**Mounting:**
35mm DIN Rail or optional panel mounting*

### ORDERING INFORMATION

| Part Number | Type | Description | PCB Connection |
|---|---|---|---|
| 91.530 | KU4040B | Right Angle Pins | Machine Solder/ Wire Jumper |

### ACCESSORIES

| Accessories | Part Number | Type |
|---|---|---|
| 1 Meter DIN Rail | 2511120/1M | TS35x7.5/1M |
| *Panel Mount Tab | 93.001.5 | PMA/KU |

### ENCLOSURE DRAWING (To convert to inches divide by 25.4.)

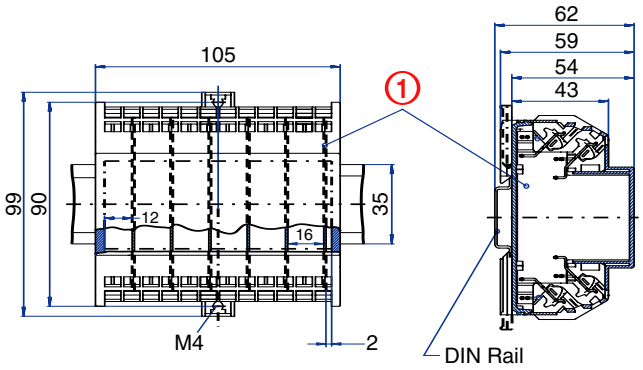


### PCB DRAWING (To convert to inches divide by 25.4.)

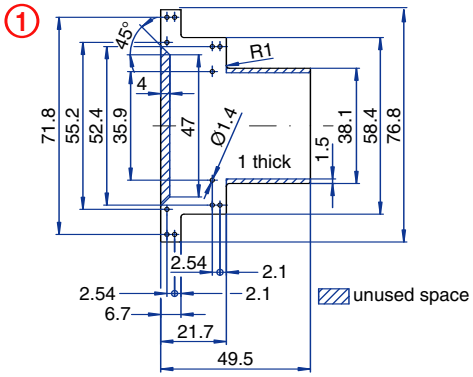


## 48 Terminal

### Horizontal PCB
### Spring Clamp

### TECHNICAL INFORMATION

**Electrical:**
10A, 300V, 26-14 AWG

**Housing Material:**
Glass-filled Polycarbonate

**Temperature Range:**
Up to 125°C (257°F)

**Flammability Rating:**
UL94 V-O

**Color:**
Light Gray

**Terminal Type:**
Spring Cage Clamp

**Terminal Screw Size:**
–

**Recommended Torque:**
–

**Max. PCB's:**
(1) Horizontal

**Mounting:**
35mm DIN Rail or optional panel mounting*

### ORDERING INFORMATION

| Part Number | Type | Description | PCB Connection |
|---|---|---|---|
| 91.510 | KU4040C | Straight Pins | Machine Solder |

### ACCESSORIES

| Accessories | Part Number | Type |
|---|---|---|
| 1 Meter DIN Rail | 2511120/1M | TS35x7.5/1M |
| *Panel Mount Tab | 93.001.5 | PMA/KU |

### ENCLOSURE DRAWING (To convert to inches divide by 25.4.)

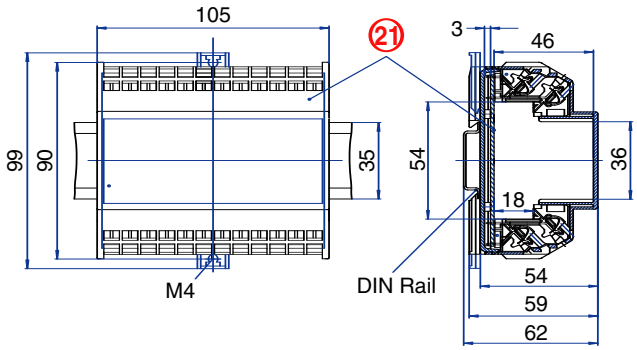


### PCB DRAWING (To convert to inches divide by 25.4.)

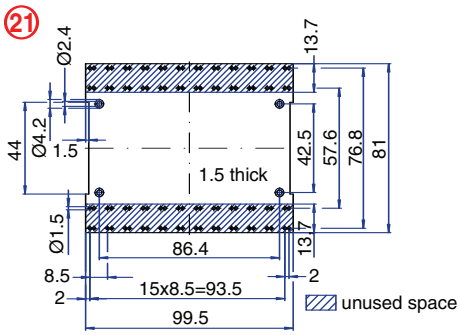

## 32 Terminal

**Vertical PCB**
**Screw Clamp**
**terminals on one side only**

### TECHNICAL INFORMATION

**Electrical:**
16A, 300V, 22-14 AWG
**Housing Material:**
Glass-filled Polycarbonate
**Temperature Range:**
Up to 125°C (257°F)
**Flammability Rating:**
UL94 V-O
**Color:**
Light Gray

**Terminal Type:**
Screw / Pressure Plate
**Terminal Screw Size:**
M3.5
**Recommended Torque:**
0.8Nm
**Max. PCB's:**
(8) Vertical
**Mounting:**
35mm DIN Rail or optional panel mounting*

### ORDERING INFORMATION

| Part Number | Type | Description | PCB Connection |
|---|---|---|---|
| 91.320 | KU4011B | Right Angle Pins | Machine Solder/ Wire Jumper |

### ACCESSORIES

| Accessories | Part Number | Type |
|---|---|---|
| 1 Meter DIN Rail | 2511120/1M | TS35x7.5/1M |
| Screw-hole and Wire-Entry Cover Plug Set | 91.201.1 | SHPC |
| *Panel Mount Tab | 93.001.5 | PMA/KU |

### ENCLOSURE DRAWING (To convert to inches divide by 25.4.)

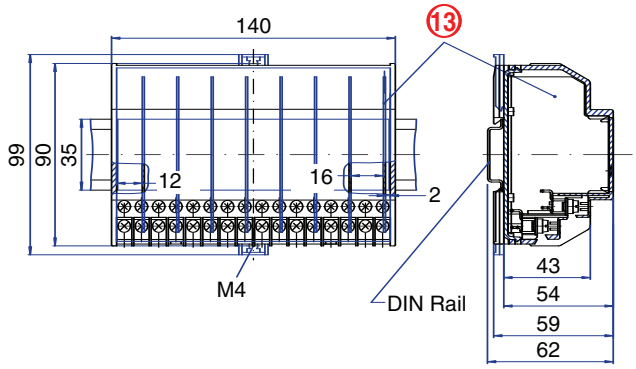


### PCB DRAWING (To convert to inches divide by 25.4.)

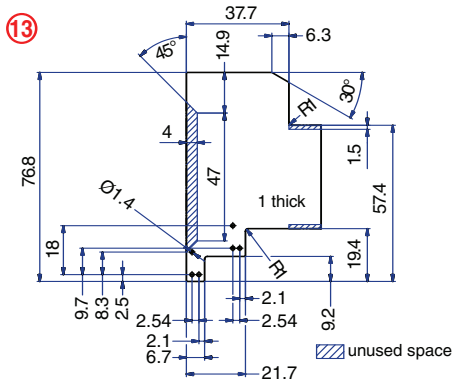


## 32 Terminal

**Horizontal PCB**
**Screw Clamp**
**terminals on one side only**

### TECHNICAL INFORMATION

**Electrical:**
16A, 300V, 22-14 AWG
**Housing Material:**
Glass-filled Polycarbonate
**Temperature Range:**
Up to 125°C (257°F)
**Flammability Rating:**
UL94 V-O
**Color:**
Light Gray

**Terminal Type:**
Screw / Pressure Plate
**Terminal Screw Size:**
M3.5
**Recommended Torque:**
0.8Nm
**Max. PCB's:**
(1) Horizontal, (2) Vertical
**Mounting:**
35mm DIN Rail or optional panel mounting*

### ORDERING INFORMATION

| Part Number | Type | Description | PCB Connection |
|---|---|---|---|
| 91.300 | KU4011C | Straight Pins | Machine Solder |

### ACCESSORIES

| Accessories | Part Number | Type |
|---|---|---|
| 1 Meter DIN Rail | 2511120/1M | TS35x7.5/1M |
| Screw-hole and Wire-Entry Cover Plug Set | 91.201.1 | SHPC |
| *Panel Mount Tab | 93.001.5 | PMA/KU |

### ENCLOSURE DRAWING (To convert to inches divide by 25.4.)

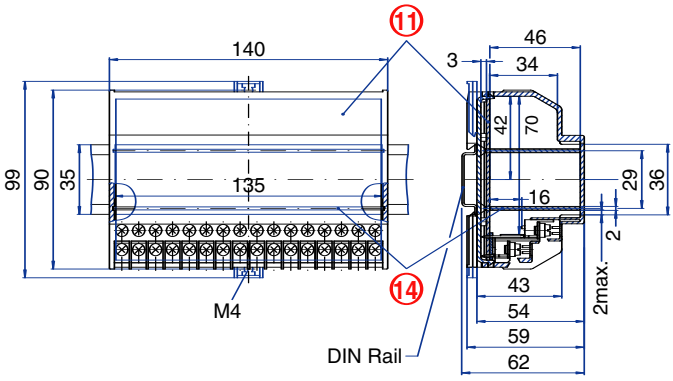


### PCB DRAWING (To convert to inches divide by 25.4.)

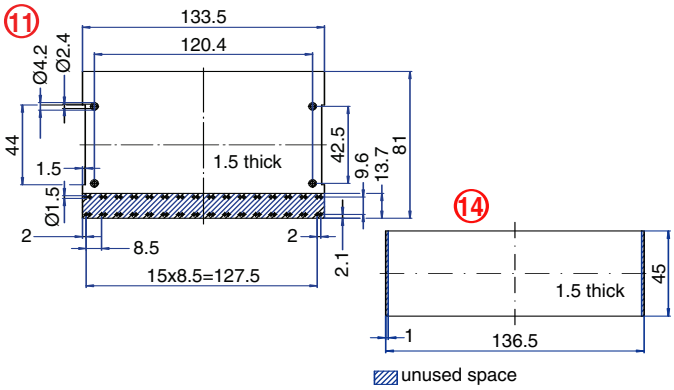

## 32 Terminal

**Vertical PCB**
**Screw Clamp**
**terminals in corners only**

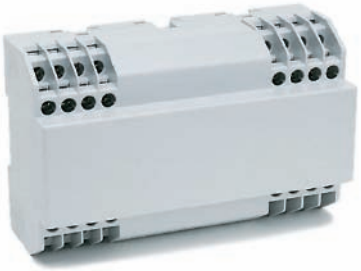

### TECHNICAL INFORMATION

**Electrical:**
16A, 300V, 22-14 AWG
**Housing Material:**
Glass-filled Polycarbonate
**Temperature Range:**
Up to 125°C (257°F)
**Flammability Rating:**
UL94 V-O
**Color:**
Light Gray

**Terminal Type:**
Screw / Pressure Plate
**Terminal Screw Size:**
M3.5
**Recommended Torque:**
0.8Nm
**Max. PCB's:**
(4) Vertical
**Mounting:**
35mm DIN Rail or optional panel mounting*

### ORDERING INFORMATION

| Part Number | Type | Description | PCB Connection |
|---|---|---|---|
| 91.360 | KU4012B | Right Angle Pins | Machine Solder/ Wire Jumper |

### ACCESSORIES

| Accessories | Part Number | Type |
|---|---|---|
| 1 Meter DIN Rail | 2511120/1M | TS35x7.5/1M |
| Screw-hole and Wire-Entry Cover Plug Set | 91.201.1 | SHPC |
| *Panel Mount Tab | 93.001.5 | PMA/KU |

### ENCLOSURE DRAWING (To convert to inches divide by 25.4.)

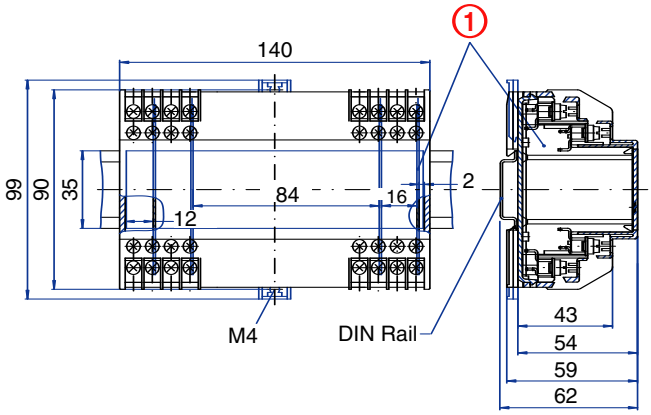


### PCB DRAWING (To convert to inches divide by 25.4.)

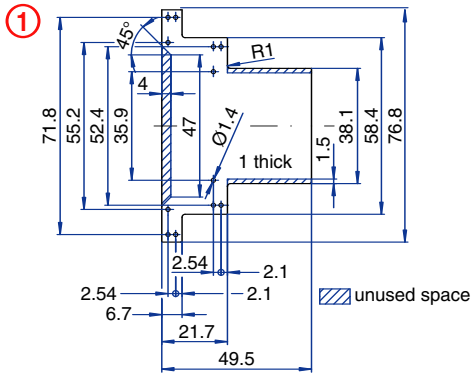


## 32 Terminal

**Horizontal PCB**
**Screw Clamp**
**terminals in corners only**

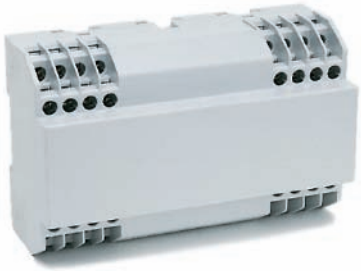

### TECHNICAL INFORMATION

**Electrical:**
16A, 300V, 22-14 AWG
**Housing Material:**
Glass-filled Polycarbonate
**Temperature Range:**
Up to 125°C (257°F)
**Flammability Rating:**
UL94 V-O
**Color:**
Light Gray

**Terminal Type:**
Screw / Pressure Plate
**Terminal Screw Size:**
M3.5
**Recommended Torque:**
0.8Nm
**Max. PCB's:**
(1) Horizontal, (2) Vertical
**Mounting:**
35mm DIN Rail or optional panel mounting*

### ORDERING INFORMATION

| Part Number | Type | Description | PCB Connection |
|---|---|---|---|
| 91.340 | KU4012C | Straight Pins | Machine Solder |

### ACCESSORIES

| Accessories | Part Number | Type |
|---|---|---|
| 1 Meter DIN Rail | 2511120/1M | TS35x7.5/1M |
| Screw-hole and Wire-Entry Cover Plug Set | 91.201.1 | SHPC |
| *Panel Mount Tab | 93.001.5 | PMA/KU |

### ENCLOSURE DRAWING (To convert to inches divide by 25.4.)

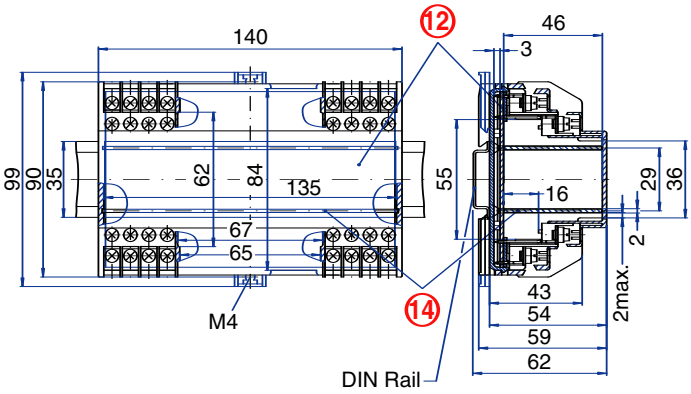


### PCB DRAWING (To convert to inches divide by 25.4.)

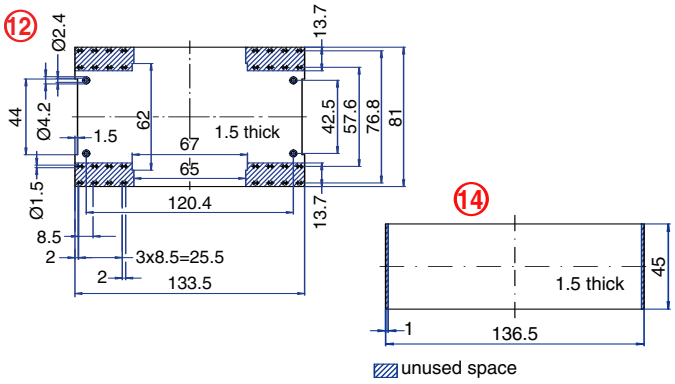

## 32 Terminal

**Vertical PCB**
**Screw Clamp**
**with vent slots**

### TECHNICAL INFORMATION

**Electrical:**
16A, 300V, 22-14 AWG
**Housing Material:**
Glass-filled Polycarbonate
**Temperature Range:**
Up to 125°C (257°F)
**Flammability Rating:**
UL94 V-O
**Color:**
Light Gray

**Terminal Type:**
Screw / Pressure Plate
**Terminal Screw Size:**
M3.5
**Recommended Torque:**
0.8Nm
**Max. PCB's:**
(1) Vertical
**Mounting:**
35mm DIN Rail or optional panel mounting*

### ORDERING INFORMATION

| Part Number | Type | Description | PCB Connection |
|---|---|---|---|
| 91.365 | KU4012BV | Right Angle Pins | Machine Solder/ Wire Jumper |

### ACCESSORIES

| Accessories | Part Number | Type |
|---|---|---|
| 1 Meter DIN Rail | 2511120/1M | TS35x7.5/1M |
| Screw-hole and Wire-Entry Cover Plug Set | 91.201.1 | SHPC |
| *Panel Mount Tab | 93.001.5 | PMA/KU |

### ENCLOSURE DRAWING (To convert to inches divide by 25.4.)

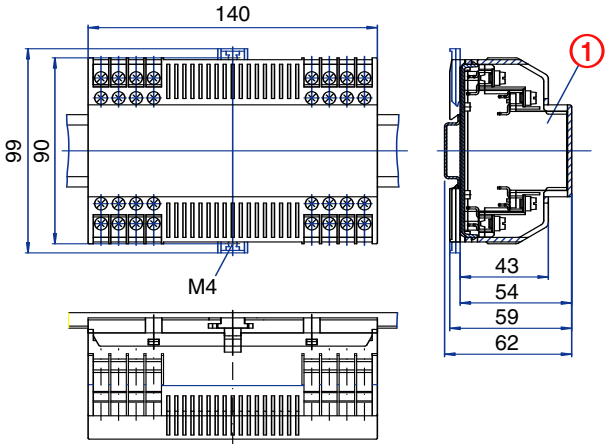


### PCB DRAWING (To convert to inches divide by 25.4.)

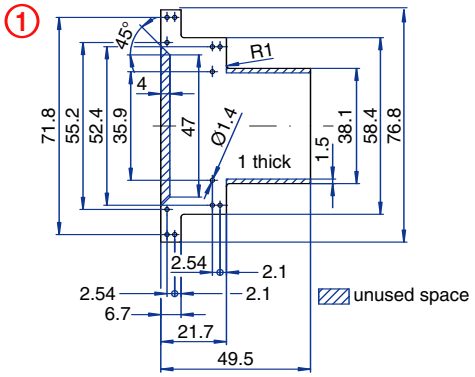


## 32 Terminal

**Horizontal PCB**
**Screw Clamp**
**with vent slots**

### TECHNICAL INFORMATION

**Electrical:**
16A, 300V, 22-14 AWG
**Housing Material:**
Glass-filled Polycarbonate
**Temperature Range:**
Up to 125°C (257°F)
**Flammability Rating:**
UL94 V-O
**Color:**
Light Gray

**Terminal Type:**
Screw / Pressure Plate
**Terminal Screw Size:**
M3.5
**Recommended Torque:**
0.8Nm
**Max. PCB's:**
(1) Horizontal
**Mounting:**
35mm DIN Rail or optional panel mounting*

### ORDERING INFORMATION

| Part Number | Type | Description | PCB Connection |
|---|---|---|---|
| 91.345 | KU4012CV | Straight Pins | Machine Solder |

### ACCESSORIES

| Accessories | Part Number | Type |
|---|---|---|
| 1 Meter DIN Rail | 2511120/1M | TS35x7.5/1M |
| Screw-hole and Wire-Entry Cover Plug Set | 91.201.1 | SHPC |
| *Panel Mount Tab | 93.001.5 | PMA/KU |

### ENCLOSURE DRAWING (To convert to inches divide by 25.4.)

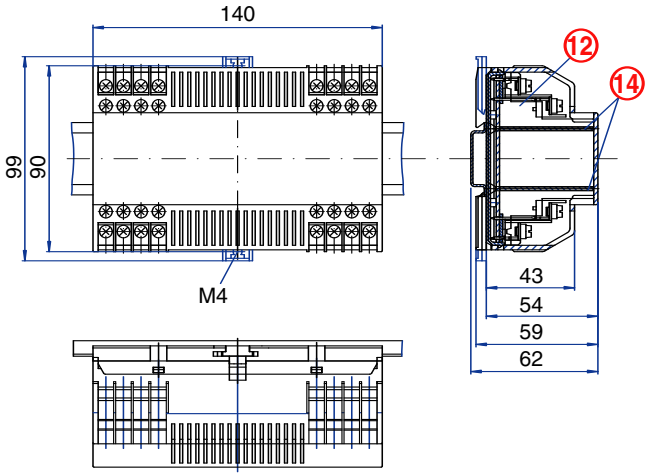


### PCB DRAWING (To convert to inches divide by 25.4.)

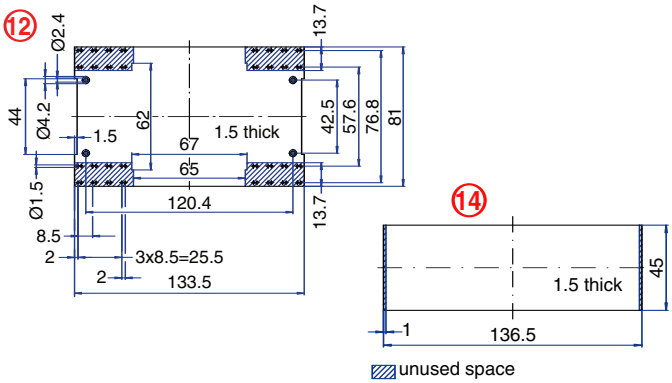

## 64 Terminal

### Vertical PCB
### Screw Clamp

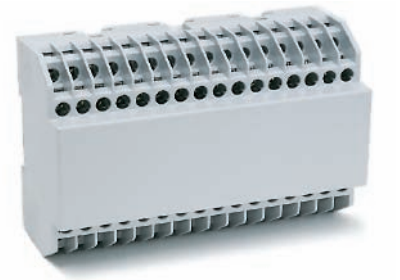

### TECHNICAL INFORMATION

**Electrical:**
16A, 300V, 22-14 AWG

**Housing Material:**
Glass-filled Polycarbonate

**Temperature Range:**
Up to 125°C (257°F)

**Flammability Rating:**
UL94 V-O

**Color:**
Light Gray

**Terminal Type:**
Screw / Pressure Plate

**Terminal Screw Size:**
M3.5

**Recommended Torque:**
0.8Nm

**Max. PCB's:**
(8) Vertical

**Mounting:**
35mm DIN Rail or optional panel mounting*

### ORDERING INFORMATION

| Part Number | Type | Description | PCB Connection |
|---|---|---|---|
| 91.400 | KU4013B | Right Angle Pins | Machine Solder/ Wire Jumper |

### ACCESSORIES

| Accessories | Part Number | Type |
|---|---|---|
| 1 Meter DIN Rail | 2511120/1M | TS35x7.5/1M |
| Screw-hole and Wire-Entry Cover Plug Set | 91.201.1 | SHPC |
| *Panel Mount Tab | 93.001.5 | PMA/KU |

### ENCLOSURE DRAWING (To convert to inches divide by 25.4.)

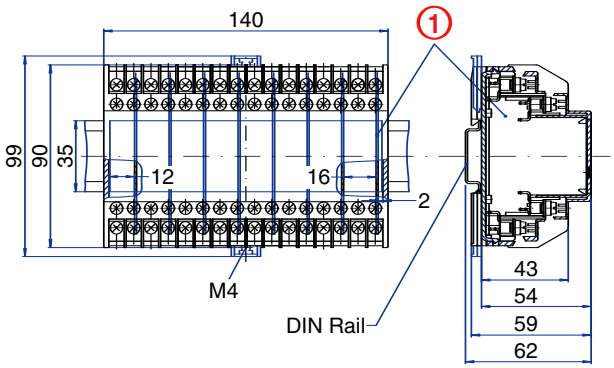


### PCB DRAWING (To convert to inches divide by 25.4.)

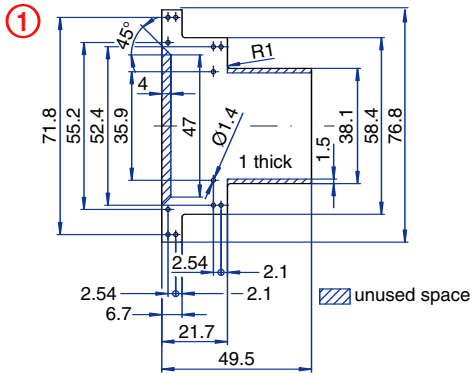


## 64 Terminal

### Horizontal PCB
### Screw Clamp

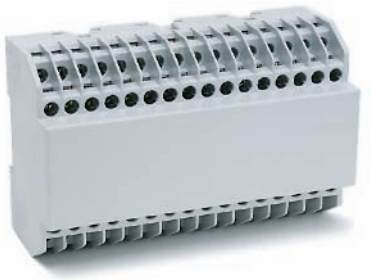

### TECHNICAL INFORMATION

**Electrical:**
16A, 300V, 22-14 AWG

**Housing Material:**
Glass-filled Polycarbonate

**Temperature Range:**
Up to 125°C (257°F)

**Flammability Rating:**
UL94 V-O

**Color:**
Light Gray

**Terminal Type:**
Screw / Pressure Plate

**Terminal Screw Size:**
M3.5

**Recommended Torque:**
0.8Nm

**Max. PCB's:**
(1) Horizontal, (2) Vertical

**Mounting:**
35mm DIN Rail or optional panel mounting*

### ORDERING INFORMATION

| Part Number | Type | Description | PCB Connection |
|---|---|---|---|
| 91.380 | KU4013C | Straight Pins | Machine Solder |

### ACCESSORIES

| Accessories | Part Number | Type |
|---|---|---|
| 1 Meter DIN Rail | 2511120/1M | TS35x7.5/1M |
| Screw-hole and Wire-Entry Cover Plug Set | 91.201.1 | SHPC |
| *Panel Mount Tab | 93.001.5 | PMA/KU |

### ENCLOSURE DRAWING (To convert to inches divide by 25.4.)

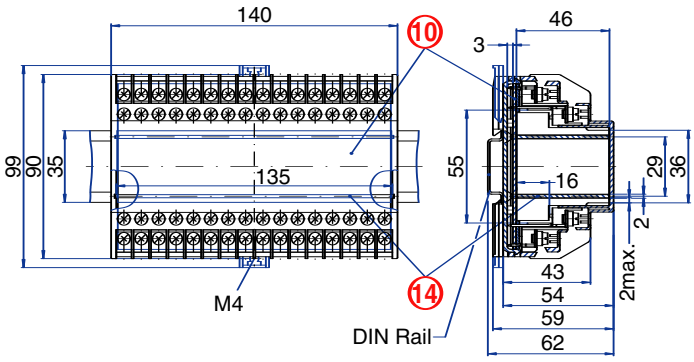


### PCB DRAWING (To convert to inches divide by 25.4.)

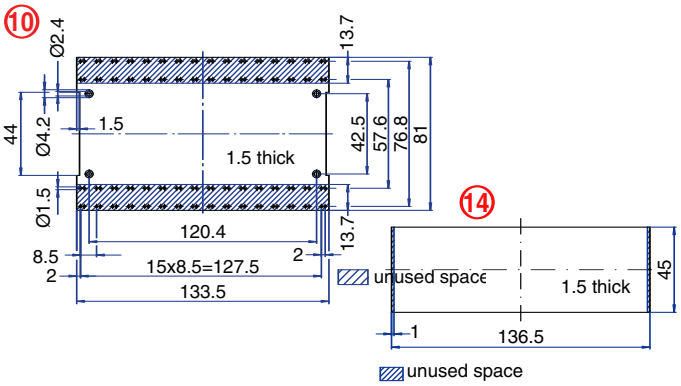

## 64 Terminal

### Vertical PCB
### Spring Clamp

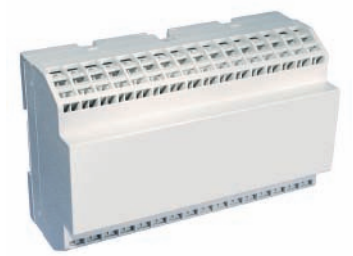

### TECHNICAL INFORMATION

**Electrical:**
10A, 300V, 26-14 AWG

**Housing Material:**
Glass-filled Polycarbonate

**Temperature Range:**
Up to 125°C (257°F)

**Flammability Rating:**
UL94 V-O

**Color:**
Light Gray

**Terminal Type:**
Spring Cage Clamp

**Terminal Screw Size:**
–

**Recommended Torque:**
–

**Max. PCB's:**
(8) Vertical

**Mounting:**
35mm DIN Rail or optional panel mounting*

### ORDERING INFORMATION

| Part Number | Type | Description | PCB Connection |
|---|---|---|---|
| 91.600 | KU4041B | Right Angle Pins | Machine Solder/ Wire Jumper |

### ACCESSORIES

| Accessories | Part Number | Type |
|---|---|---|
| 1 Meter DIN Rail | 2511120/1M | TS35x7.5/1M |
| *Panel Mount Tab | 93.001.5 | PMA/KU |

### ENCLOSURE DRAWING (To convert to inches divide by 25.4.)

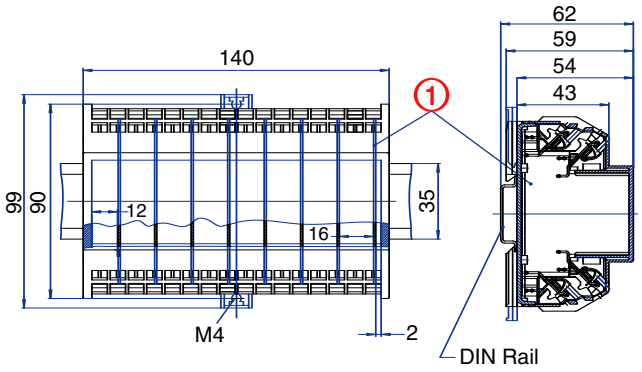


### PCB DRAWING (To convert to inches divide by 25.4.)

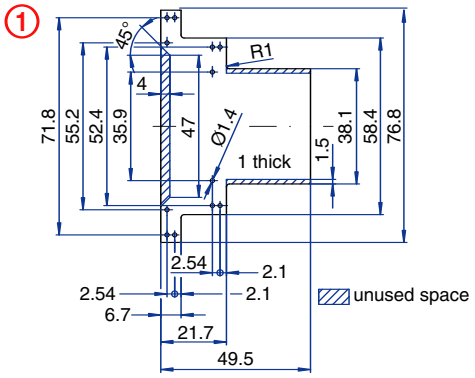


## 64 Terminal

### Horizontal PCB
### Spring Clamp

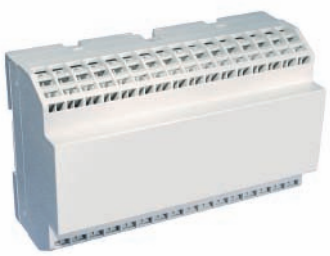

### TECHNICAL INFORMATION

**Electrical:**
10A, 300V, 26-14 AWG

**Housing Material:**
Glass-filled Polycarbonate

**Temperature Range:**
Up to 125°C (257°F)

**Flammability Rating:**
UL94 V-O

**Color:**
Light Gray

**Terminal Type:**
Spring Cage Clamp

**Terminal Screw Size:**
–

**Recommended Torque:**
–

**Max. PCB's:**
(1) Horizontal

**Mounting:**
35mm DIN Rail or optional panel mounting*

### ORDERING INFORMATION

| Part Number | Type | Description | PCB Connection |
|---|---|---|---|
| 91.610 | KU4041C | Straight Pins | Machine Solder |

### ACCESSORIES

| Accessories | Part Number | Type |
|---|---|---|
| 1 Meter DIN Rail | 2511120/1M | TS35x7.5/1M |
| *Panel Mount Tab | 93.001.5 | PMA/KU |

### ENCLOSURE DRAWING (To convert to inches divide by 25.4.)

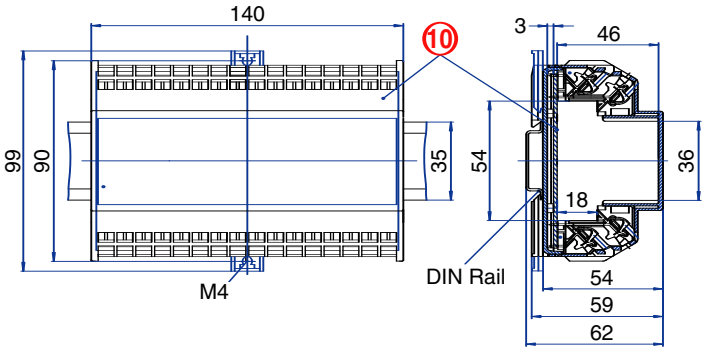


### PCB DRAWING (To convert to inches divide by 25.4.)

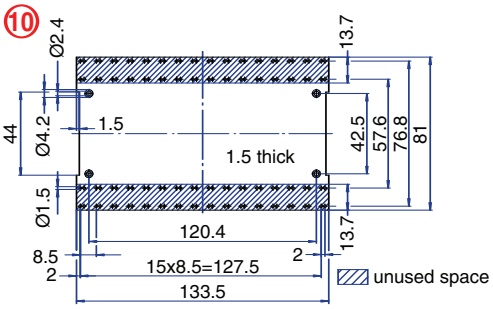

# KO4700 Enclosure Series

Ideal for industrial applications. Small to large in size, KO4700 enclosures can accommodate 8 to132 terminals for field wire connections. Series KO4700 enclosures can be customized to the exact number of terminals required. Standard enclosures are equipped with the maximum number of terminal strips and terminals.The KO4700 series are available with two types of terminations for connecting external wires. The Pressure Plate type terminals,with a center line spacing of 9mm (.35 in.) and the Box Clamp design, which has a 5mm (.19 in.) center line spacing for much higher density.

## MATERIALS

*Housing*

Housing Shell: Polycarbonate, 10% Glass Filled
Cover: Polycarbonate, 10% Glass Filled
Cover Panel: Clear Polycarbonate or Glass Filled Polycarbonate

*Terminals*

Pressure Plate: Zinc Plated, Chromated Steel
Terminal Screw: Zinc Plated, Chromated Steel
Clamp: Nickel Plated Brass
Busbar: Tin Plated Bronze
Connector Contact: Beryllium Copper, Tin Plated
(gold plating available)

**Temperature Rating:**

125°C (257°F), UL94VO
Housing Shell Color: Black
Terminal Cover Color: Tan

## PROTECTION

KO4700 enclosures have an IP20 rating (finger protected) and meet VBG4 and other European accident prevention requirements.

## CONSTRUCTION

The KO4700 enclosure series consists of a black housing shell and a tan cover with integral terminals and terminal-to-board connections. They are supplied unassembled.

The housing shell has molded printed circuit board guides to save time when inserting printed circuit boards, prevent misconnections and to keep the boards from moving. Integral tabs on the bottom of the shell further help to hold boards in place, eliminating lateral movement. KO4700 housing shells can be potted.

Printed circuit boards can be mounted in three ways:

- Behind the Front Cover
- Horizontally
- Vertically

Depending on the enclosure type,one board can be mounted directly behind the front cover (parallel to the DIN rail).Boards can also be mounted horizontally (parallel to the DIN rail) or vertically (perpendicular to the DIN rail). (Refer to the Ordering Pages for board patterns and location of board guides.)

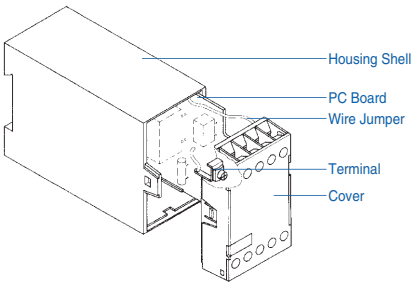


The housing cover snaps onto the housing shell. Two keyed tabs lock the cover firmly in place. Removal of the cover is possible for service and repair.

## COVER DESIGNS

Single piece, tan color covers are typically used with the smaller enclosures. They incorporate terminals and connections to the inside of the enclosure. In some of the smaller enclosures, the cover doubles as a plug.

A printed circuit board can be mounted directly behind the front cover. This board is ideal for mounting components used for setting, adjusting and monitoring such as switches, potentiometer, LEDs and LCDs. There is no interferance with any other boards mounted within the enclosure.

Modular covers consist of a one-piece tan frame with matching flat front panel. Some versions have a front cover panel that is removable and offered in matching tan or clear.The front covers can be custom imprinted or marking plates can be produced and installed behind the transparent front cover panel.

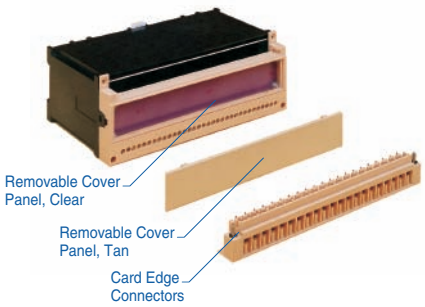


## TERMINAL DESIGNS

Select from Pressure Plate or Box Clamp terminals with wire protectors, and fixed or pluggable terminal-to-board connections. (Please refer to the Ordering Pages). Removable fixed or pluggable terminal strips can be replaced by terminal plugs if not all of the external connections of the standard enclosure are needed. The terminal screws used with both the pressure plate and box clamp designs can be operated with a flat tip or a #1 or #2 Philips type screwdriver.

### Pressure Plate Termination

This type of terminal consists of a pressure plate (captive to the terminal screw) and the terminal bottom. The pressure plate rises automatically when the screw is loosened. One or two wires, of equal or different sizes up to 2.5mm$^2$ (14 AWG) can be terminated. The grooved corners of the pressure plate ensure positive retention of wire(s). The flat bottom of the terminal extends to the inside of the enclosure and connects the terminal to the board(s) inside.

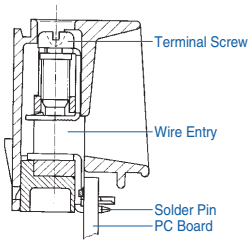


### Box Clamp Termination

The box clamp terminal accepts wires up to 4mm$^2$ (12 AWG). When the terminal screw is tightened, the serrated bottom of the wire protector pushes the wire to be terminated against the serrated busbar. The busbar extends to the inside of the enclosure to provide the terminal-to-board connection.

## TERMINAL-TO-BOARD CONNECTIONS

The KO4700 Series offers fixed and pluggable terminal-to-board connection possibilities. (Please refer to the Ordering Pages on the following pages for your selection.)

### Fixed Connections

Fixed terminal-to-board connections can be made by Wire Jumper, Fast On tabs, Solder tabs, or Machine Solderable Pins.

**Fast On** tabs, 2.8mm (.11in.) accept industry standard Fast On connectors. Use with wire jumpers to connect to board(s).

***Wire Jumper*** connections can also be made by soldering a wire jumper between the center hole of the Fast On tab and the printed circuit board(s).

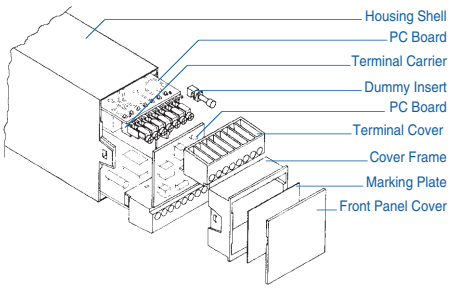


***Solder Tab*** can be hand soldered to the board.

**Machine Solderable Pins** can be machine soldered to the board in the same step as the other components, saving assembly time. The metal parts of the terminals are supplied as separate strips which snap into the terminal housing after soldering.

### Pluggable Connections

The pluggable terminal strips of the KO4700 series fit across the width of the enclosure and plug directly into the board(s) by using a Card Edge connector. Enclosures equipped with pressure plate terminals also provide Solder Tabs for terminal-to-board connections when mounting an additional board directly behind the front cover. A Wire Jumper can be soldered to these tabs as well.

For better retention, the strips have captive screws at each end that insert into brass bushings, molded into the housing shell. Up to four terminal strips can be used per enclosure.The pluggable versions are ideal whenever quick connections and replacement of boards and devices is important. They also reduce the danger of misconnected wires and downtime.

## MOUNTING

The KO4700 Series enclosures are designed to be mounted on standard 35 x 7.5mm DIN rail but will also fit on the 35 x15mm DIN rail. The extra high enclosures should be mounted on the deeper, 35 x 15mm DIN rail. (Refer to the Ordering Pages on the following pages to determine the correct size rail for the enclosure you select.)

KO4700 series enclosures can also be panel mounted using pull-out tabs on the base of the enclosure. One tab is factory installed on each enclosure. Up to a total of 6 pull-out mounting tabs can be installed (See Accessories) (Refer to page 19 for mounting instructions.)

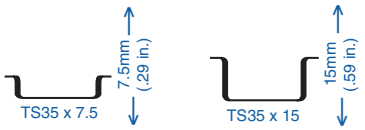


## MARKING

KO4700 enclosures have a flat center area on the cover for marking and mounting of components. Several types have removable front cover panels, which can be marked at a separate location. Imprinted marking plates can be used in conjunction with the transparent, removable cover panel.

## ACCESSORIES

- Terminal Cover Strips
- Pull-Out Panel Mounting Tabs
- Screws for Mounting Printed Circuit Board
- 35 x 7.5mm DIN Rail
- 35 x 15mm DIN Rail

## CUSTOMIZATION

Enclosures can be customized to the exact number of terminals needed. We can punch, drill or cut custom cutouts and holes for potentiometers, switches, LEDs or LDCs. Custom colors and special markings are also available. Please call us for further information.

## MODULAR ENCLOSURES

A new group of modular enclosures has been added to the KO4700 series. These enclosures can be ordered in a variety of terminal arrangements allowing for many different customized configurations. Terminal sets are available in 3, 4 and 7 pole blocks as well as blank blocks without terminals. High Current terminals are also available on some models. This new modular terminal design allows anywhere from 0 to 56 terminals for field wire connections.

The KO4700 modular enclosures have the same design features of the standard series as well as the same materials. The terminals are of the box clamp style. The standard terminals feature pluggable connections while solder connections are used on the high current terminals. Printed circuit board placement is horizontal (parallel to the DIN rail) or vertical (perpendicular to the DIN rail).

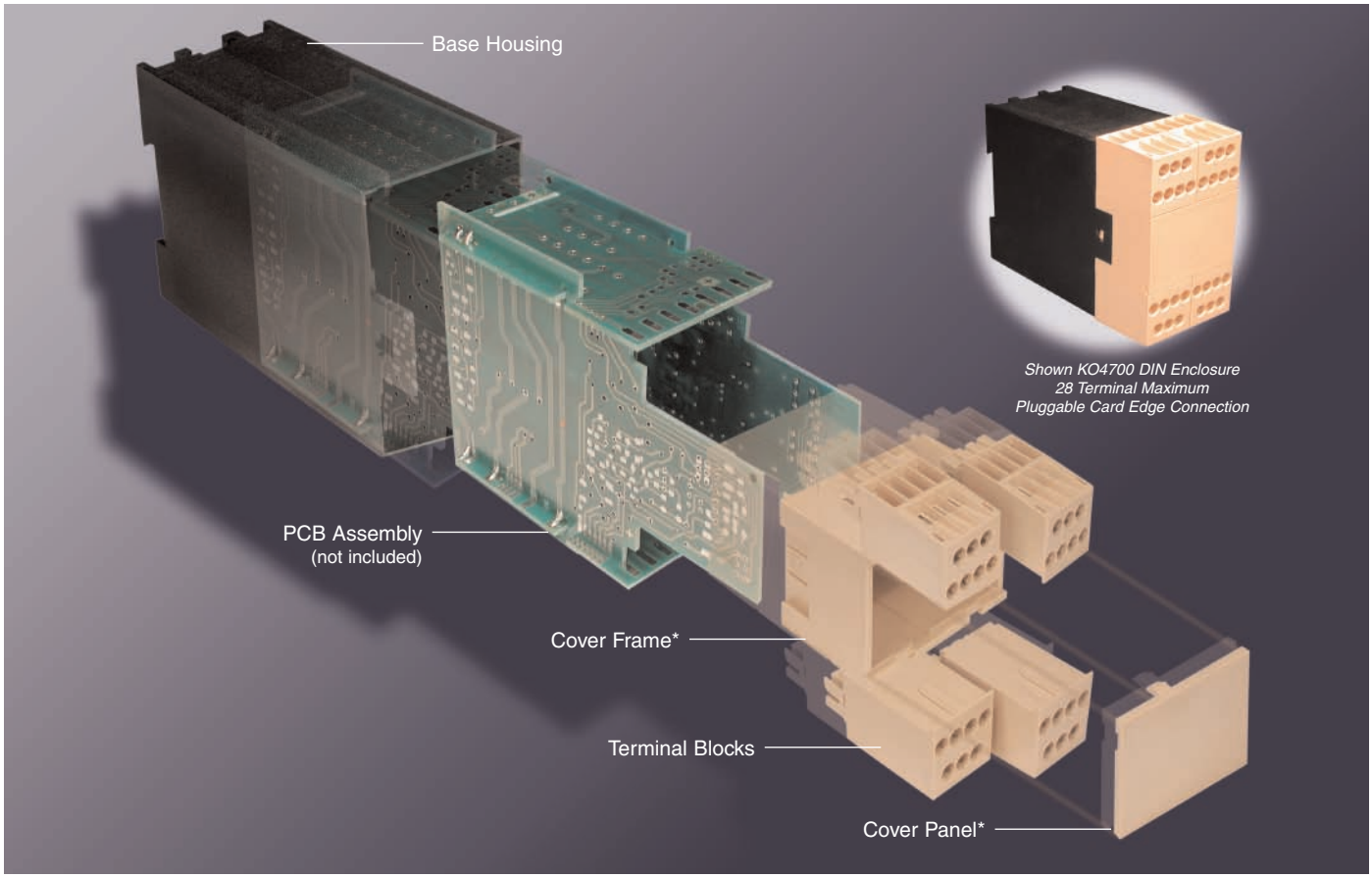


## Ordering Information

The modular enclosures are ordered in separate pieces. A complete enclosure consists of a base, cover frame*, cover panel* and the appropriate number of terminal blocks. Standard terminal blocks can be ordered as blank blocks with no termination points or with 3, 4, or 7 terminations. High current terminal blocks are available on some models. Theses blocks can also be ordered as blank blocks with no terminations or with 3 terminations. (Please refer to the Ordering Pages on the following pages for a list of how many blocks should be ordered per enclosure).

* High current versions have one piece center cover section instead of this two piece design.

# KO4700 Enclosure Series

## 8 Terminal
### Solder Connection

### TECHNICAL INFORMATION

**Electrical:**
16A, 300V, 22-12 AWG
**Housing Material:**
Glass-filled Polycarbonate
**Cover Material:**
Glass-filled Polycarbonate
**Temperature Range:**
Up to 125°C (257°F)
**Flammability Rating:**
UL94 V-O (V-2 Clear Panel)
**Color:**
Black Housing with Tan Cover

**Terminal Type:**
Box Clamp
**Terminal Screw Size:**
M3.5
**Recommended Torque:**
0.8Nm
**Max. PCB's:**
(2) Vertical
(1) Behind cover
**Mounting:**
35mm DIN Rail or optional panel mounting*

### ORDERING INFORMATION

| Part Number | Type | Description | PCB Connection |
|---|---|---|---|
| 90.201 | KO4712 | Solid Cover | Machine Solderable Pins |
| 90.201.1 | KO4712 | Removable Cover Panel, Tan | Machine Solderable Pins |
| 90.201.2 | KO4712 | Removable Cover Panel, Clear | Machine Solderable Pins |

### ACCESSORIES

| Accessories | Part Number | Type |
|---|---|---|
| 1 Meter DIN Rail | 2511120/1M | TS35x7.5/1M |
| *Panel Mount Tab | 93.001.2 | PMA |

### ENCLOSURE DRAWING (To convert to inches divide by 25.4.)

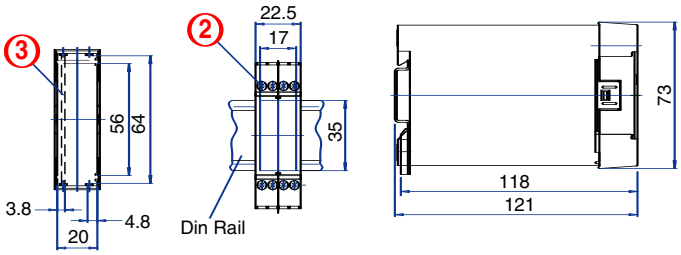


### PCB DRAWING (To convert to inches divide by 25.4.)

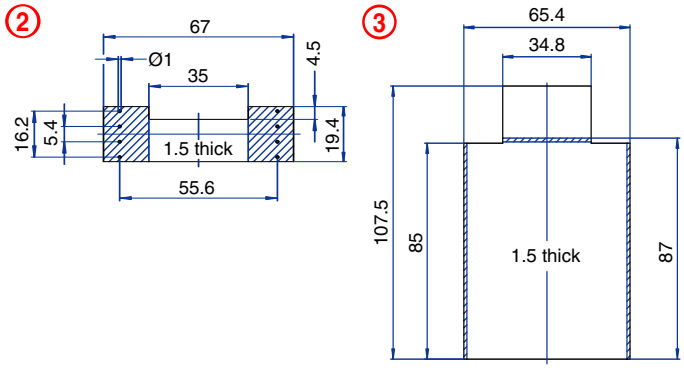


unused space

## 8 Terminal
### Solder/Tab Connection

### TECHNICAL INFORMATION

**Electrical:**
16A, 300V, 22-12 AWG
**Housing Material:**
Glass-filled Polycarbonate
**Cover Material:**
Glass-filled Polycarbonate
**Temperature Range:**
Up to 125°C (257°F)
**Flammability Rating:**
UL94 V-O (V-2 Clear Panel)
**Color:**
Black Housing with Tan Cover

**Terminal Type:**
Box Clamp
**Terminal Screw Size:**
M3.5
**Recommended Torque:**
0.8Nm
**Max. PCB's:**
(2) Vertical
**Mounting:**
35mm DIN Rail or optional panel mounting*

### ORDERING INFORMATION

| Part Number | Type | Description | PCB Connection |
|---|---|---|---|
| 90.202 | KO4712B | Solid Cover | Wire Jumper |
| 90.202.1 | KO4712B | Removable Cover Panel, Tan | Wire Jumper |
| 90.202.2 | KO4712B | Removable Cover Panel, Clear | Wire Jumper |

### ACCESSORIES

| Accessories | Part Number | Type |
|---|---|---|
| 1 Meter DIN Rail | 2511120/1M | TS35x7.5/1M |
| *Panel Mount Tab | 93.001.2 | PMA |

### ENCLOSURE DRAWING (To convert to inches divide by 25.4.)

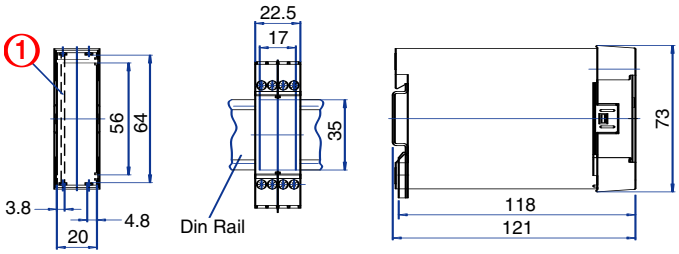


### PCB DRAWING (To convert to inches divide by 25.4.)

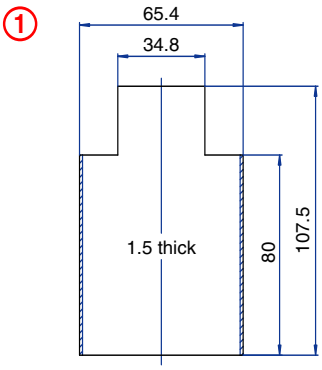


unused space

## 10 Terminal

**Spring Clamp**
**Solder/Tab Connection**

### TECHNICAL INFORMATION

**Electrical:**
16A, 300V, 24-14 AWG
**Housing Material:**
Glass-filled Polycarbonate
**Cover Material:**
Glass-filled Polycarbonate
**Temperature Range:**
Up to 125°C (257°F)
**Flammability Rating:**
UL94 V-O
**Color:**
Black Housing with Tan Cover

**Terminal Type:**
Spring Cage Clamp
**Terminal Screw Size:**
–
**Recommended Torque:**
–
**Max. PCB's:**
(2) Vertical
**Mounting:**
35mm DIN Rail

### ORDERING INFORMATION

| Part Number | Type | Description | PCB Connection |
|---|---|---|---|
| 90.215 | KO4761 | Solid Cover | Wire Jumper/ Fast On |

### ACCESSORIES

| Accessories | Part Number | Type |
|---|---|---|
| 1 Meter DIN Rail | 2511120/1M | TS35x7.5/1M |

### ENCLOSURE DRAWING (To convert to inches divide by 25.4.)

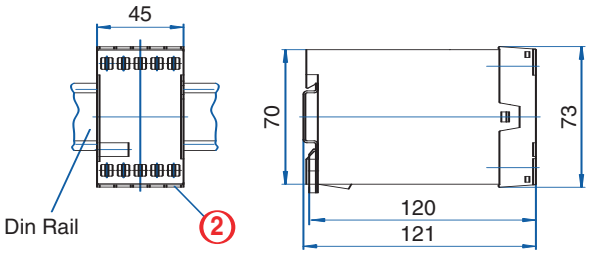


### PCB DRAWING (To convert to inches divide by 25.4.)

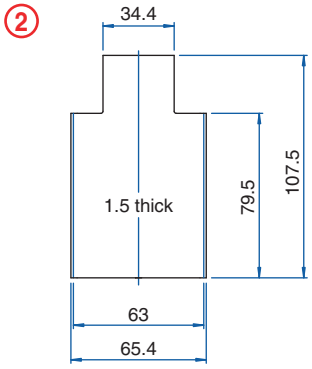


unused space

## 10 Terminal

**Solder/Tab**
**Connection**

### TECHNICAL INFORMATION

**Electrical:**
25A, 300V, 22-14 AWG
**Housing Material:**
Glass-filled Polycarbonate
**Cover Material:**
Glass-filled Polycarbonate
**Temperature Range:**
Up to 125°C (257°F)
**Flammability Rating:**
UL94 V-O
**Color:**
Black Housing with Tan Cover

**Terminal Type:**
Screw / Pressure Plate
**Terminal Screw Size:**
M3.5
**Recommended Torque:**
0.8Nm
**Max. PCB's:**
(2) Vertical
**Mounting:**
35mm DIN Rail

### ORDERING INFORMATION

| Part Number | Type | Description | PCB Connection |
|---|---|---|---|
| 90.230 | KO4762 | Solid Cover | Wire Jumper/ Fast On |

### ACCESSORIES

| Accessories | Part Number | Type |
|---|---|---|
| 1 Meter DIN Rail | 2511120/1M | TS35x7.5/1M |

### ENCLOSURE DRAWING (To convert to inches divide by 25.4.)

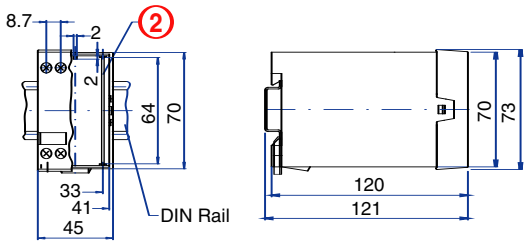


### PCB DRAWING (To convert to inches divide by 25.4.)

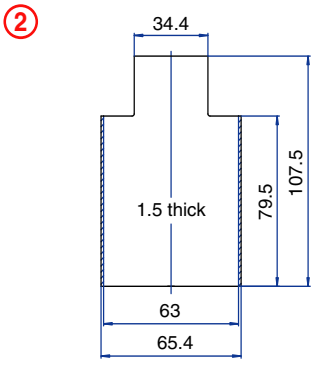


unused space

## 16 Terminal
### Solder Connection

### TECHNICAL INFORMATION

**Electrical:**
16A, 300V, 22-12 AWG
**Housing Material:**
Glass-filled Polycarbonate
**Cover Material:**
Glass-filled Polycarbonate
**Temperature Range:**
Up to 125°C (257°F)
**Flammability Rating:**
UL94 V-O (V-2 clear panel)
**Color:**
Black Housing with Tan Cover

**Terminal Type:**
Box Clamp
**Terminal Screw Size:**
M3.5
**Recommended Torque:**
0.8Nm
**Max. PCB's:**
(2) Vertical
(1) Horizontal
**Mounting:**
35mm DIN Rail

### ORDERING INFORMATION

| Part Number | Type | Description | PCB Connection |
|---|---|---|---|
| 90.290 | KO4763A | Solid Cover | Machine Solderable Pins |
| 90.291 | KO4763A | Removable Cover Panel, Tan | Machine Solderable Pins |
| 90.292 | KO4763A | Removable Cover Panel, Clear | Machine Solderable Pins |

### ACCESSORIES

| Accessories | Part Number | Type |
|---|---|---|
| 1 Meter DIN Rail | 2511120/1M | TS35x7.5/1M |

### ENCLOSURE DRAWING (To convert to inches divide by 25.4.)

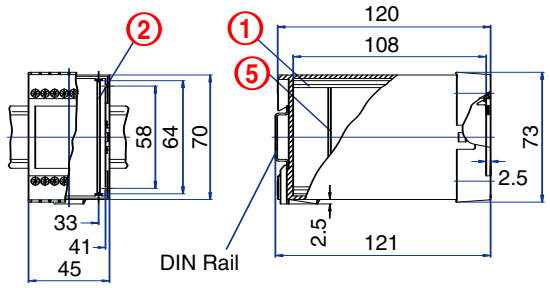


### PCB DRAWING (To convert to inches divide by 25.4.)

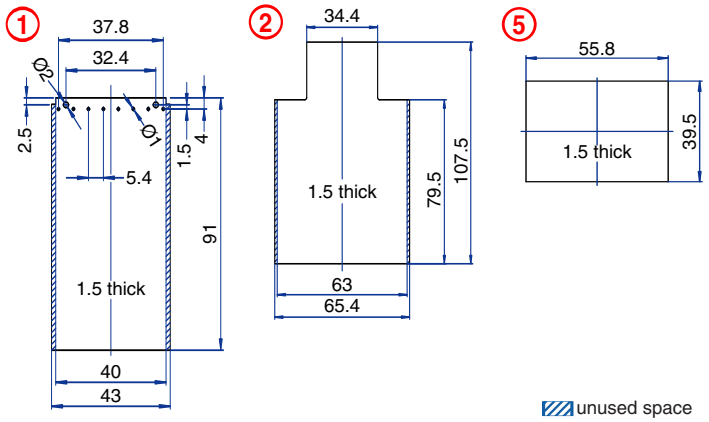


## 16 Terminal
### Solder/Tab Connection

### TECHNICAL INFORMATION

**Electrical:**
16A, 300V, 22-12 AWG
**Housing Material:**
Glass-filled Polycarbonate
**Cover Material:**
Glass-filled Polycarbonate
**Temperature Range:**
Up to 125°C (257°F)
**Flammability Rating:**
UL94 V-O (V-2 clear panel)
**Color:**
Black Housing with Tan Cover

**Terminal Type:**
Box Clamp
**Terminal Screw Size:**
M3.5
**Recommended Torque:**
0.8Nm
**Max. PCB's:**
(2) Vertical
**Mounting:**
35mm DIN Rail

### ORDERING INFORMATION

| Part Number | Type | Description | PCB Connection |
|---|---|---|---|
| 90.300 | KO4763B | Solid Cover | Wire Jumper |
| 90.301 | KO4763B | Removable Cover Panel, Tan | Wire Jumper |
| 90.302 | KO4763B | Removable Cover Panel, Clear | Wire Jumper |

### ACCESSORIES

| Accessories | Part Number | Type |
|---|---|---|
| 1 Meter DIN Rail | 2511120/1M | TS35x7.5/1M |

### ENCLOSURE DRAWING (To convert to inches divide by 25.4.)

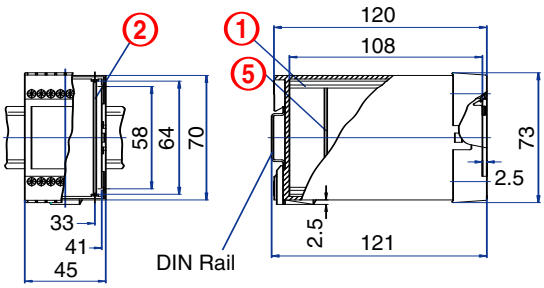


### PCB DRAWING (To convert to inches divide by 25.4.)

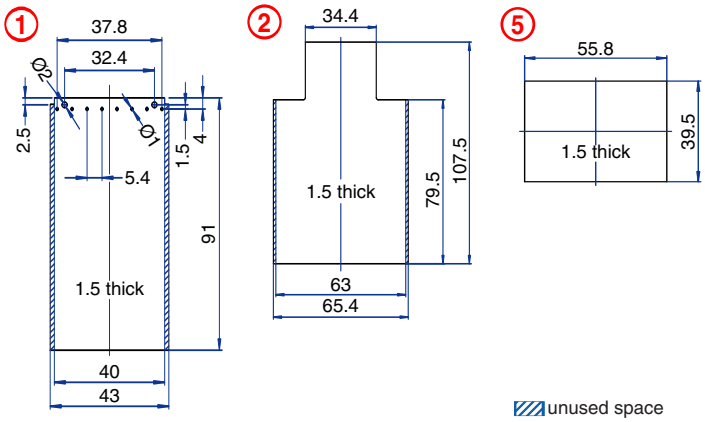

## 16 Terminal

**Pluggable Connection**

### TECHNICAL INFORMATION

**Electrical:**
10A, 300V, 22-12 AWG

**Housing Material:**
Glass-filled Polycarbonate

**Cover Material:**
Glass-filled Polycarbonate

**Temperature Range:**
Up to 125°C (257°F)

**Flammability Rating:**
UL94 V-O (V-2 clear panel)

**Color:**
Black Housing with Tan Cover

**Terminal Type:**
Box Clamp

**Terminal Screw Size:**
M3.5

**Recommended Torque:**
0.8Nm

**Max. PCB's:**
(2) Vertical
(1) Horizontal

**Mounting:**
35mm DIN Rail

### ORDERING INFORMATION

| Part Number | Type | Description | PCB Connection |
|---|---|---|---|
| 90.320 | KO4763P | Solid Cover | Card Edge |
| 90.321 | KO4763P | Removable Cover Panel, Tan | Card Edge |
| 90.322 | KO4763P | Removable Cover Panel, Clear | Card Edge |

### ACCESSORIES

| Accessories | Part Number | Type |
|---|---|---|
| 1 Meter DIN Rail | 2511120/1M | TS35x7.5/1M |

### ENCLOSURE DRAWING (To convert to inches divide by 25.4.)

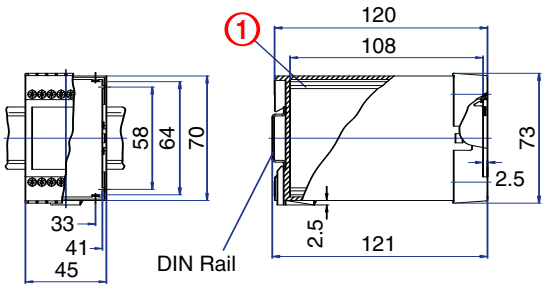


### PCB DRAWING (To convert to inches divide by 25.4.)

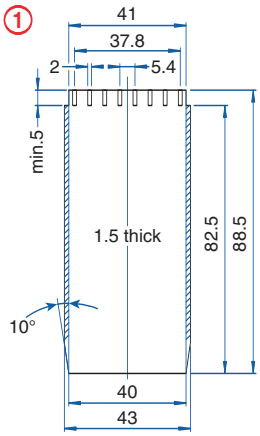


unused space

## 20 Terminal

**Pluggable Connection**

### TECHNICAL INFORMATION

**Electrical:**
10A, 300V, 22-14 AWG

**Housing Material:**
Glass-filled Polycarbonate

**Cover Material:**
Glass-filled Polycarbonate

**Temperature Range:**
Up to 125°C (257°F)

**Flammability Rating:**
UL94 V-O (V-2 clear panel)

**Color:**
Black Housing with Tan Cover

**Terminal Type:**
Screw / Pressure Plate

**Terminal Screw Size:**
M3.5

**Recommended Torque:**
0.8Nm

**Max. PCB's:**
(5) Vertical
(1) Horizontal behind cover

**Mounting:**
35mm DIN Rail or optional panel mounting*

### ORDERING INFORMATION

| Part Number | Type | Description | PCB Connection |
|---|---|---|---|
| 90.350 | KO4718P | Solid Cover | Card Edge/ Wire Jumper |
| 90.351 | KO4718P | Removable Cover Panel, Tan | Card Edge/ Wire Jumper |
| 90.352 | KO4718P | Removable Cover Panel, Clear | Card Edge/ Wire Jumper |

### ACCESSORIES

| Accessories | Part Number | Type |
|---|---|---|
| 1 Meter DIN Rail | 2511120/1M | TS35x7.5/1M |
| *Panel Mount Tab (need 2) | 93.001.2 | PMA |

### ENCLOSURE DRAWING (To convert to inches divide by 25.4.)

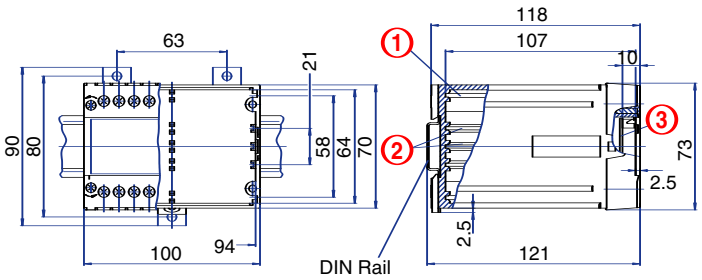


### PCB DRAWING (To convert to inches divide by 25.4.)

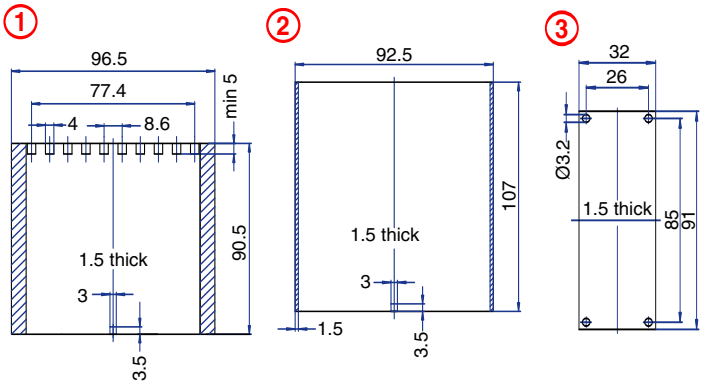


unused space

# KO4700 Enclosure Series

## 22 Terminal
**Solder Connection**

## TECHNICAL INFORMATION

**Electrical:**
16A, 300V, 22-12 AWG

**Housing Material:**
Glass-filled Polycarbonate

**Cover Material:**
Glass-filled Polycarbonate

**Temperature Range:**
Up to 125°C (257°F)

**Flammability Rating:**
UL94 V-O (V-2 Clear Panel)

**Color:**
Black Housing with Tan Cover

**Terminal Type:**
Box Clamp

**Terminal Screw Size:**
M3.5

**Recommended Torque:**
0.8Nm

**Max. PCB's:**
(5) Vertical
(1) Behind cover

**Mounting:**
35mm DIN Rail or optional panel mounting*

## ENCLOSURE DRAWING (To convert to inches divide by 25.4.)

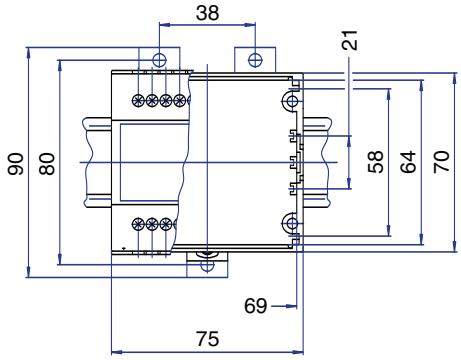


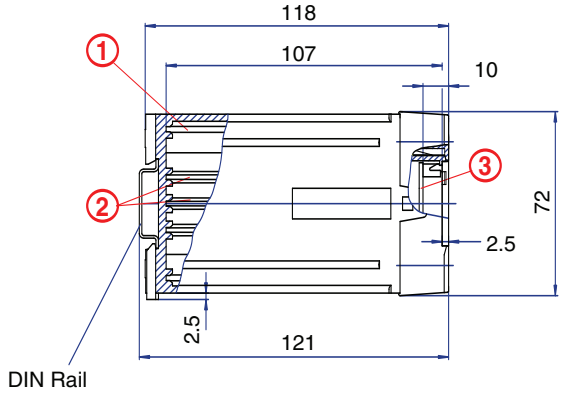


## ORDERING INFORMATION

| Part Number | Type | Description | PCB Connection |
|---|---|---|---|
| 90.380 | KO4713A | Solid Cover | Machine Solderable Pins |
| 90.381 | KO4713A | Removable Cover Panel, Tan | Machine Solderable Pins |
| 90.382 | KO4713A | Removable Cover Panel, Clear | Machine Solderable Pins |

## ACCESSORIES

| Accessories | Part Number | Type |
|---|---|---|
| 1 Meter DIN Rail | 2511120/1M | TS35x7.5/1M |
| *Panel Mount Tab (need 2) | 93.001.2 | PMA |

## PCB DRAWING (To convert to inches divide by 25.4.)

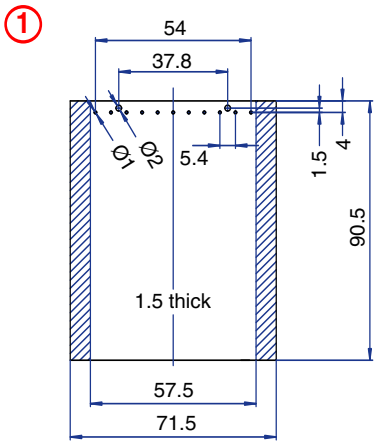


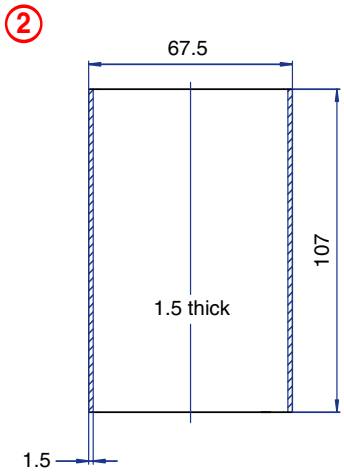


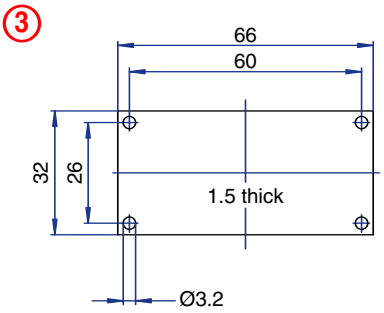


unused space

## 22 Terminal
**Pluggable Connection**

## TECHNICAL INFORMATION

**Electrical:**
10A, 300V, 22-12 AWG

**Housing Material:**
Glass-filled Polycarbonate

**Cover Material:**
Glass-filled Polycarbonate

**Temperature Range:**
Up to 125°C (257°F)

**Flammability Rating:**
UL94 V-O (V-2 clear panel)

**Color:**
Black Housing with Tan Cover

**Terminal Type:**
Box Clamp

**Terminal Screw Size:**
M3.5

**Recommended Torque:**
0.8Nm

**Max. PCB's:**
(5) Vertical
(1) Behind cover

**Mounting:**
35mm DIN Rail or optional panel mounting*

## ORDERING INFORMATION

| Part Number | Type | Description | PCB Connection |
|---|---|---|---|
| 90.410 | KO4713P | Solid Cover | Card Edge |
| 90.411 | KO4713P | Removable Cover Panel, Tan | Card Edge |
| 90.412 | KO4713P | Removable Cover Panel, Clear | Card Edge |

## ACCESSORIES

| Accessories | Part Number | Type |
|---|---|---|
| 1 Meter DIN Rail | 2511120/1M | TS35x7.5/1M |
| *Panel Mount Tab (need 2) | 93.001.2 | PMA |

## ENCLOSURE DRAWING (To convert to inches divide by 25.4.)

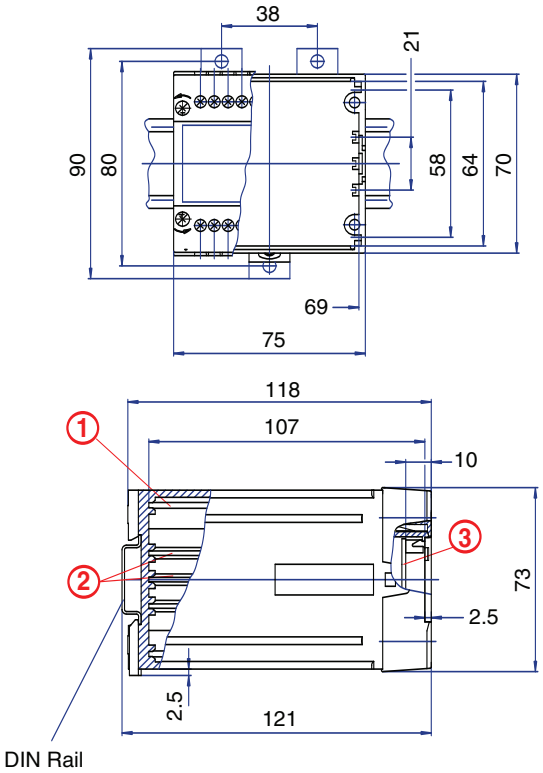


## PCB DRAWING (To convert to inches divide by 25.4.)

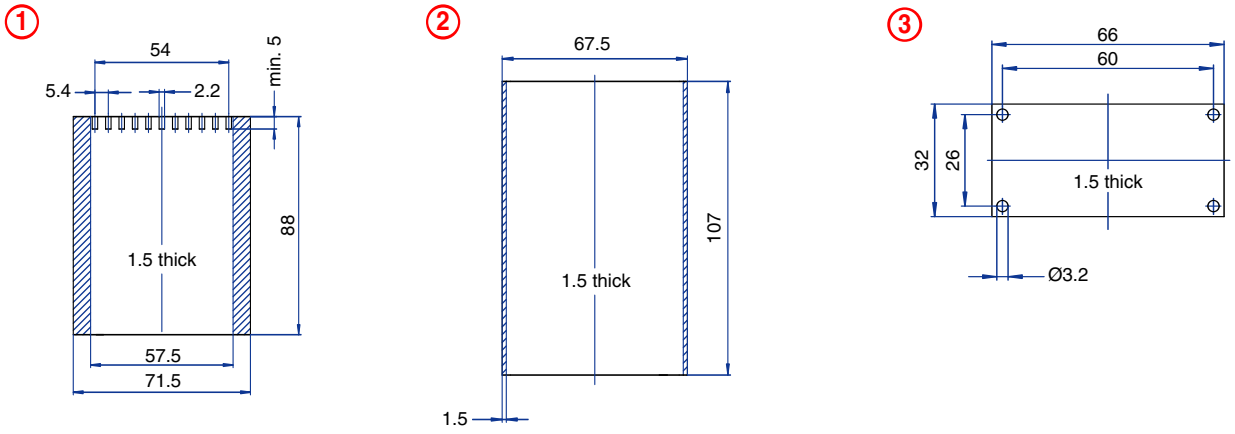


unused space

# KO4700 Enclosure Series

## 30 Terminal
**Solder Connection**

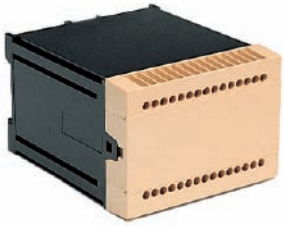

## TECHNICAL INFORMATION

**Electrical:**
16A, 300V, 22-12 AWG

**Housing Material:**
Glass-filled Polycarbonate

**Cover Material:**
Glass-filled Polycarbonate

**Temperature Range:**
Up to 125°C (257°F)

**Flammability Rating:**
UL94 V-O (V-2 clear panel)

**Color:**
Black Housing with Tan Cover

**Terminal Type:**
Box Clamp

**Terminal Screw Size:**
M3.5

**Recommended Torque:**
0.8Nm

**Max. PCB's:**
(5) Vertical
(1) Behind Cover

**Mounting:**
35mm DIN Rail or optional panel mounting*

## ORDERING INFORMATION

| Part Number | Type | Description | PCB Connection |
|---|---|---|---|
| 90.440 | KO4717A | Solid Cover | Machine Solderable Pins |
| 90.441 | KO4717A | Removable Cover Panel, Tan | Machine Solderable Pins |
| 90.442 | KO4717A | Removable Cover Panel, Clear | Machine Solderable Pins |

## ACCESSORIES

| Accessories | Part Number | Type |
|---|---|---|
| 1 Meter DIN Rail | 2511120/1M | TS35x7.5/1M |
| *Panel Mount Tab (need 2) | 93.001.2 | PMA |

## ENCLOSURE DRAWING (To convert to inches divide by 25.4.)

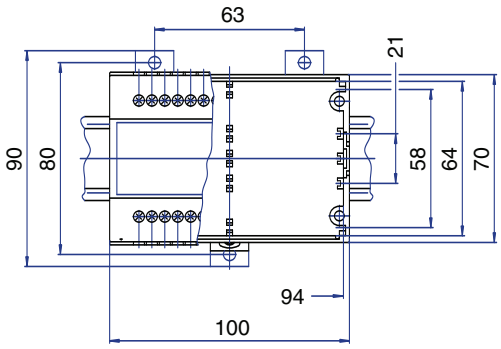


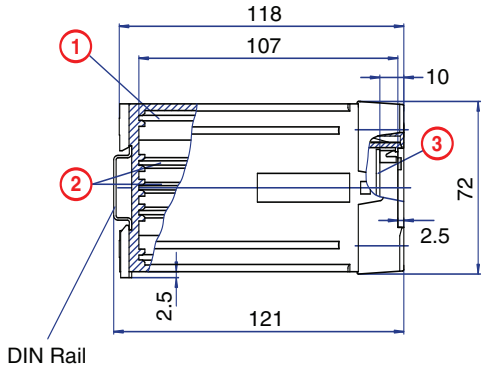


## PCB DRAWING (To convert to inches divide by 25.4.)

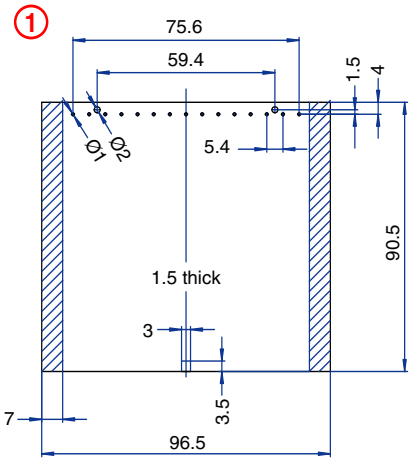


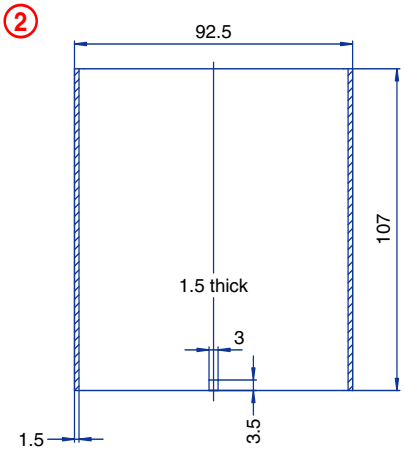


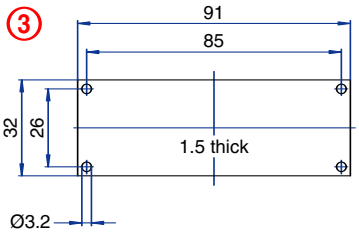


unused space

## 30 Terminal
**Pluggable Connection**

## TECHNICAL INFORMATION

**Electrical:**
10A, 300V, 22-12 AWG

**Housing Material:**
Glass-filled Polycarbonate

**Cover Material:**
Glass-filled Polycarbonate

**Temperature Range:**
Up to 125°C (257°F)

**Flammability Rating:**
UL94 V-O (V-2 clear panel)

**Color:**
Black Housing with Tan Cover

**Terminal Type:**
Box Clamp

**Terminal Screw Size:**
M3.5

**Recommended Torque:**
0.8Nm

**Max. PCB's:**
(5) Vertical
(1) Behind Cover

**Mounting:**
35mm DIN Rail or optional panel mounting*

## ORDERING INFORMATION

| Part Number | Type | Description | PCB Connection |
|---|---|---|---|
| 90.470 | KO4717P | Solid Cover | Card Edge |
| 90.471 | KO4717P | Removable Cover Panel, Tan | Card Edge |
| 90.472 | KO4717P | Removable Cover Panel, Clear | Card Edge |

## ACCESSORIES

| Accessories | Part Number | Type |
|---|---|---|
| 1 Meter DIN Rail | 2511120/1M | TS35x7.5/1M |
| *Panel Mount Tab (need 2) | 93.001.2 | PMA |

## ENCLOSURE DRAWING (To convert to inches divide by 25.4.)

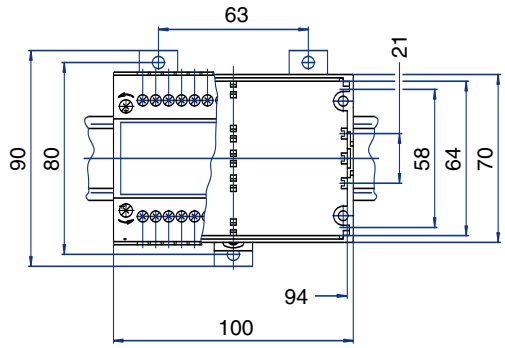


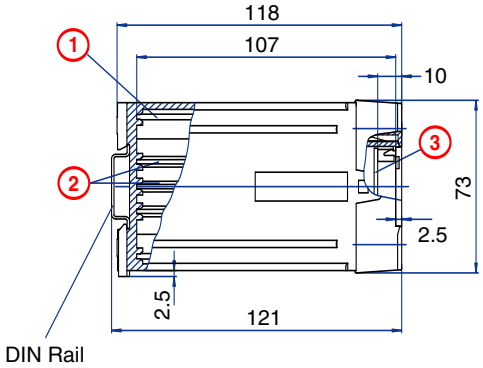


## PCB DRAWING (To convert to inches divide by 25.4.)

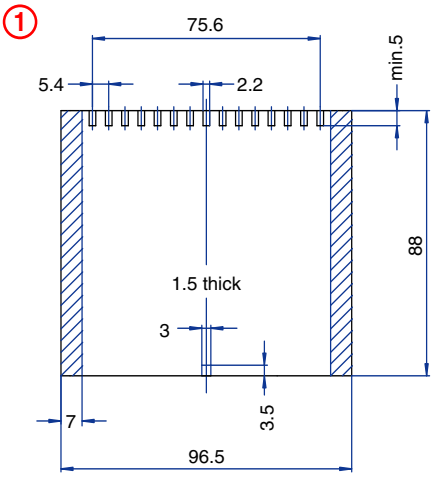


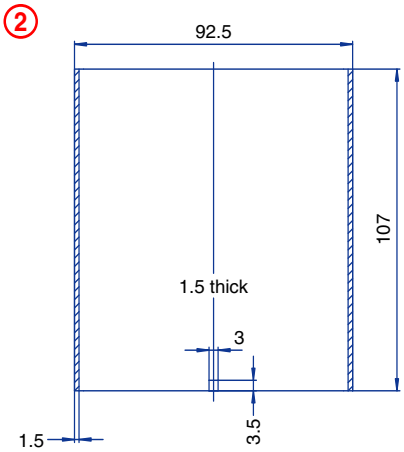


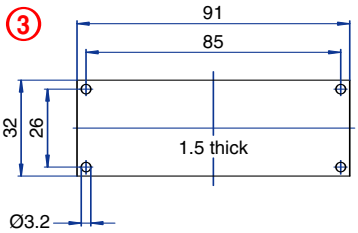


unused space

# KO4700 Enclosure Series

## 32 Terminal

**Pluggable and Solder Connection**

## TECHNICAL INFORMATION

**Electrical:**
10A, 300V, 22-14 AWG

**Housing Material:**
Glass-filled Polycarbonate

**Cover Material:**
Glass-filled Polycarbonate

**Temperature Range:**
Up to 125°C (257°F)

**Flammability Rating:**
UL94 V-O (V-2 clear panel)

**Color:**
Black Housing with Tan Cover

**Terminal Type:**
Screw/ Pressure Plate

**Terminal Screw Size:**
M3.5

**Recommended Torque:**
0.8Nm

**Max. PCB's:**
(5) Vertical
(1) Behind cover
(1) Base Mount

**Mounting:**
35mm DIN Rail or optional panel mounting*

## ORDERING INFORMATION

| Part Number | Type | Description | PCB Connection |
|---|---|---|---|
| 90.500 | KO4719P | Solid Cover | Card Edge/ Wire Jumper |
| 90.501 | KO4719P | Removable Cover Panel, Tan | Card Edge/ Wire Jumper |
| 90.502 | KO4719P | Removable Cover Panel, Clear | Card Edge/ Wire Jumper |

## ACCESSORIES

| Accessories | Part Number | Type |
|---|---|---|
| 1 Meter DIN Rail | 2511120/1M | TS35x7.5/1M |
| *Panel Mount Tab (need 3) | 93.001.2 | PMA |

## ENCLOSURE DRAWING (To convert to inches divide by 25.4.)

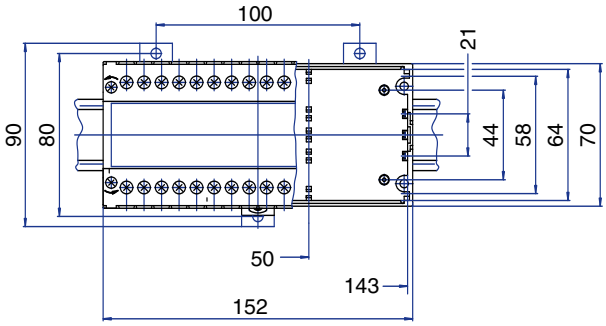


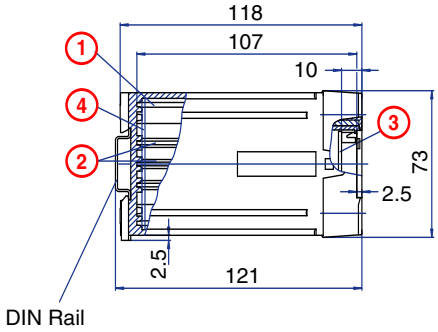


## PCB DRAWING (To convert to inches divide by 25.4.)

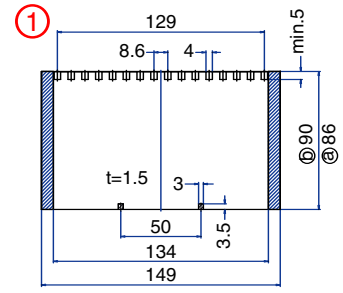


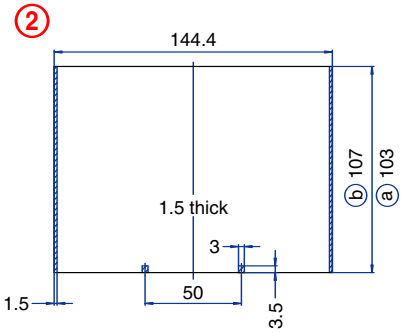


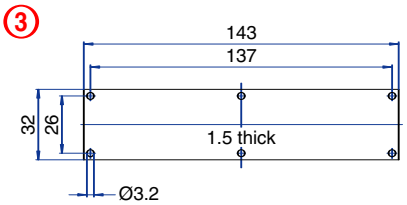


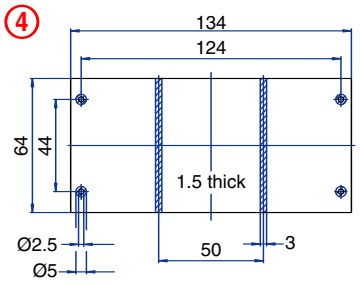


unused space
ⓐ with base mount PCB
ⓑ without base mount PCB

## 42 Terminal

**Pluggable and Solder Connection**

## TECHNICAL INFORMATION

**Electrical:**
10A, 300V, 22-14 AWG

**Housing Material:**
Glass-filled Polycarbonate

**Cover Material:**
Glass-filled Polycarbonate

**Temperature Range:**
Up to 125°C (257°F)

**Flammability Rating:**
UL94 V-O (V-2 clear panel)

**Color:**
Black Housing with Tan Cover

**Terminal Type:**
Screw/ Pressure Plate

**Terminal Screw Size:**
M3.5

**Recommended Torque:**
0.8Nm

**Max. PCB's:**
(5) Vertical
(1) Behind cover

**Mounting:**
35mm DIN Rail or optional panel mounting*

## ORDERING INFORMATION

| Part Number | Type | Description | PCB Connection |
|---|---|---|---|
| 90.530 | KO4720P | Solid Cover | Card Edge/ Wire Jumper |
| 90.531 | KO4720P | Removable Cover Panel, Tan | Card Edge/ Wire Jumper |
| 90.532 | KO4720P | Removable Cover Panel, Clear | Card Edge/ Wire Jumper |

## ACCESSORIES

| Accessories | Part Number | Type |
|---|---|---|
| 1 Meter DIN Rail | 2511120/1M | TS35x7.5/1M |
| *Panel Mount Tab (need 3) | 93.001.2 | PMA |

## ENCLOSURE DRAWING (To convert to inches divide by 25.4.)

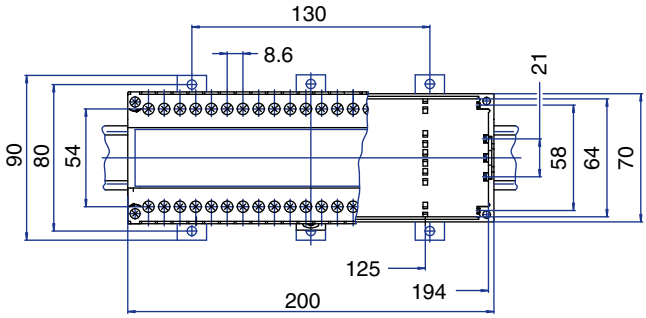


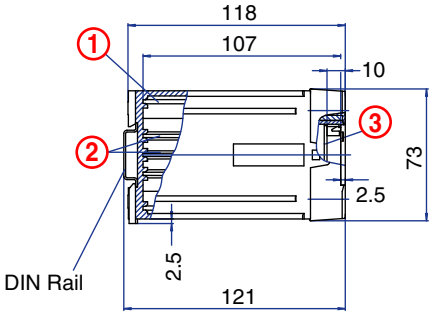


## PCB DRAWING (To convert to inches divide by 25.4.)

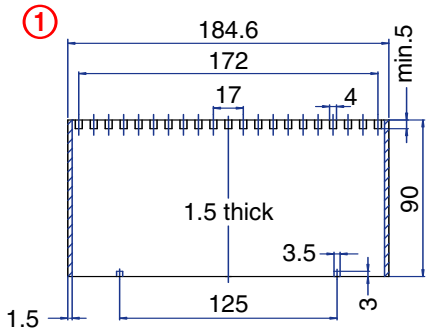


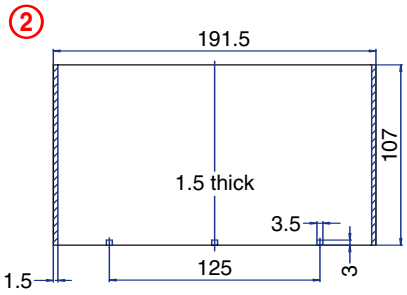


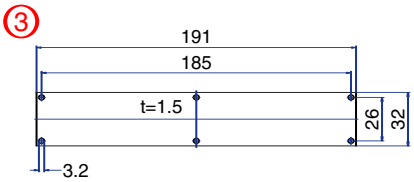


unused space

# KO4700 Enclosure Series

## 42 Terminal

**Pluggable and Solder Connection**

## TECHNICAL INFORMATION

**Electrical:**
10A, 300V, 22-14 AWG

**Housing Material:**
Glass-filled Polycarbonate

**Cover Material:**
Glass-filled Polycarbonate

**Temperature Range:**
Up to 125°C (257°F)

**Flammability Rating:**
UL94 V-O

**Color:**
Black Housing with Tan Cover

**Terminal Type:**
Screw/ Pressure Plate

**Terminal Screw Size:**
M3.5

**Recommended Torque:**
0.8Nm

**Max. PCB's:**
(11) Vertical
(1) Base Mount

**Mounting:**
35mm DIN Rail or optional panel mounting*

## ORDERING INFORMATION

| Part Number | Type | Description | PCB Connection |
|---|---|---|---|
| 90.560 | KO4722SP | Solid Cover | Card Edge/ Wire Jumper |

## ACCESSORIES

| Accessories | Part Number | Type |
|---|---|---|
| 1 Meter DIN Rail | CA701/15-S | TS35x15/1M |
| *Panel Mount Tab (need 3) | 93.001.2 | PMA |

## ENCLOSURE DRAWING (To convert to inches divide by 25.4.)

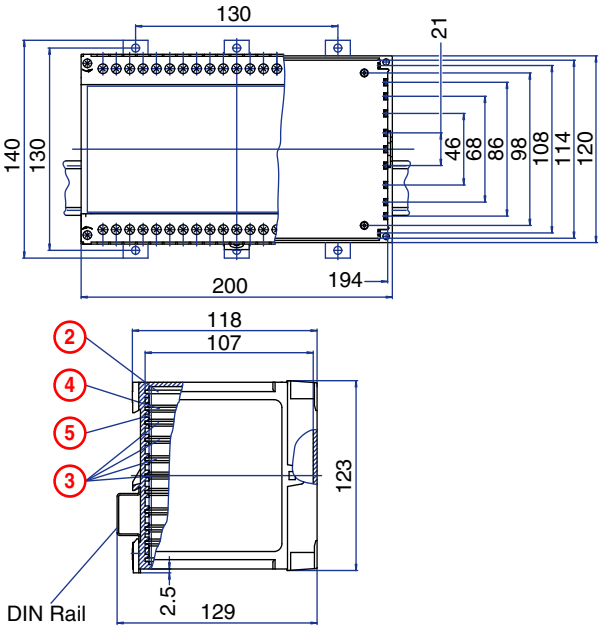


## PCB DRAWING (To convert to inches divide by 25.4.)

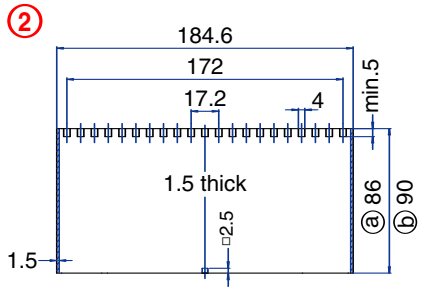


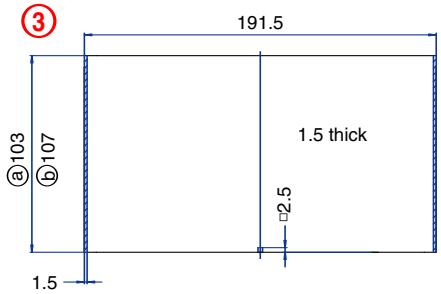


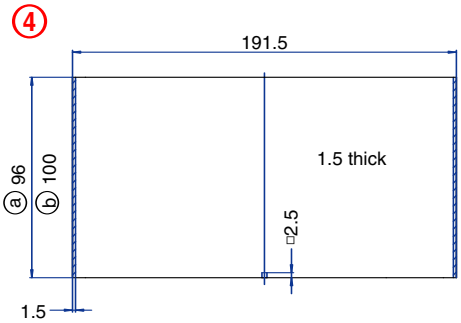


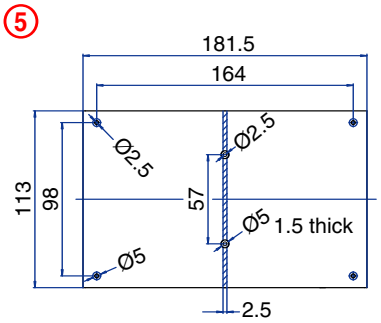


unused space
ⓐ with base mount PCB
ⓑ without base mount PCB

## 50 Terminal

**Solder Connection**

## TECHNICAL INFORMATION

**Electrical:**
16A, 300V, 22-12 AWG

**Housing Material:**
Glass-filled Polycarbonate

**Cover Material:**
Glass-filled Polycarbonate

**Temperature Range:**
Up to 125°C (257°F)

**Flammability Rating:**
UL94 V-O (V-2 Clear Panel)

**Color:**
Black Housing with Tan Cover

**Terminal Type:**
Box Clamp

**Terminal Screw Size:**
M3.5

**Recommended Torque:**
0.8Nm

**Max. PCB's:**
(5) Vertical
(1) Behind Cover
(1) Base Mount

**Mounting:**
35mm DIN Rail or optional panel mounting*

## ORDERING INFORMATION

| Part Number | Type | Description | PCB Connection |
|---|---|---|---|
| 90.590 | KO4716A | Solid Cover | Machine Solderable Pins |
| 90.591 | KO4716A | Removable Cover Panel, Tan | Machine Solderable Pins |
| 90.592 | KO4716A | Removable Cover Panel, Clear | Machine Solderable Pins |

## ACCESSORIES

| Accessories | Part Number | Type |
|---|---|---|
| 1 Meter DIN Rail | 2511120/1M | TS35x7.5/1M |
| *Panel Mount Tab (need 3) | 93.001.2 | PMA |

## ENCLOSURE DRAWING (To convert to inches divide by 25.4.)

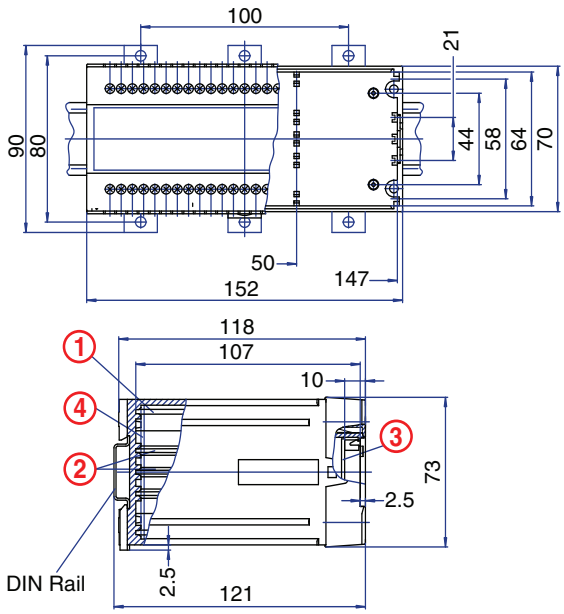


## PCB DRAWING (To convert to inches divide by 25.4.)

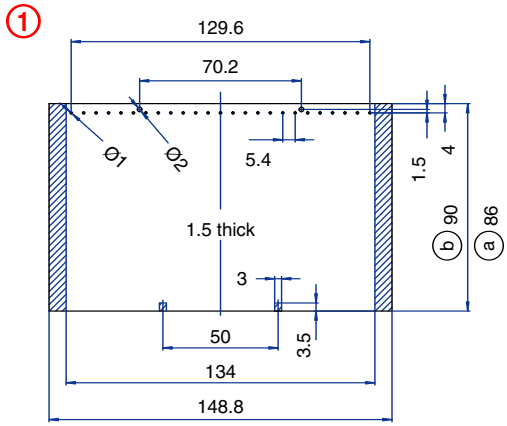


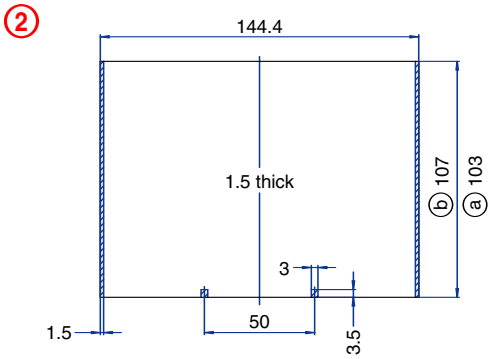


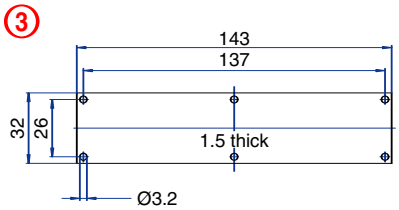


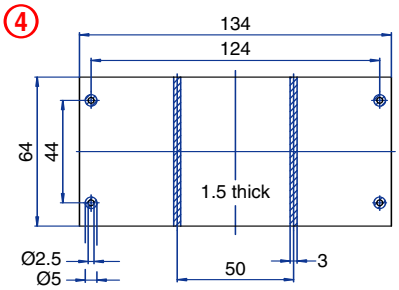


unused space
ⓐ with base mount PCB
ⓑ without base mount PCB

# KO4700 Enclosure Series

## 50 Terminal

**Pluggable Connection**

## TECHNICAL INFORMATION

**Electrical:**
10A, 300V, 22-12 AWG

**Housing Material:**
Glass-filled Polycarbonate

**Cover Material:**
Glass-filled Polycarbonate

**Temperature Range:**
Up to 125°C (257°F)

**Flammability Rating:**
UL94 V-O (V-2 Clear Panel)

**Color:**
Black Housing with Tan Cover

**Terminal Type:**
Box Clamp

**Terminal Screw Size:**
M3.5

**Recommended Torque:**
0.8Nm

**Max. PCB's:**
(5) Vertical
(1) Behind cover
(1) Base Mount

**Mounting:**
35mm DIN Rail or optional panel mounting*

## ENCLOSURE DRAWING (To convert to inches divide by 25.4.)

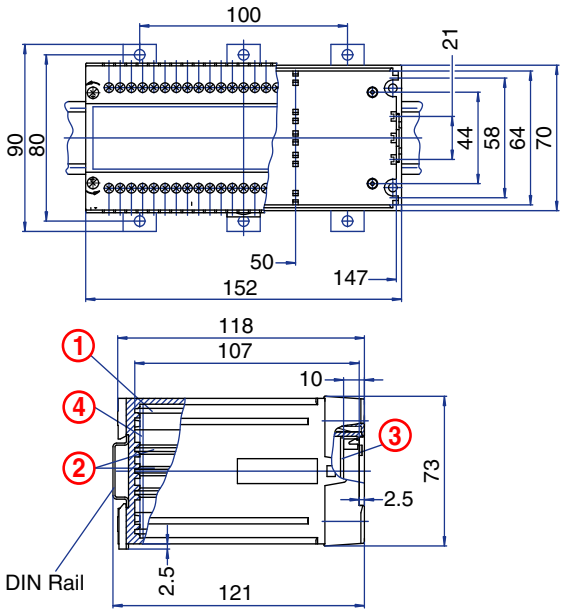


## ORDERING INFORMATION

| Part Number | Type | Description | PCB Connection |
|---|---|---|---|
| 90.620 | KO4716P | Solid Cover | Card Edge |
| 90.621 | KO4716P | Removable Cover Panel, Tan | Card Edge |
| 90.622 | KO4716P | Removable Cover Panel, Clear | Card Edge |

## ACCESSORIES

| Accessories | Part Number | Type |
|---|---|---|
| 1 Meter DIN Rail | 2511120/1M | TS35x7.5/1M |
| *Panel Mount Tab (need 3) | 93.001.2 | PMA |

## PCB DRAWING (To convert to inches divide by 25.4.)

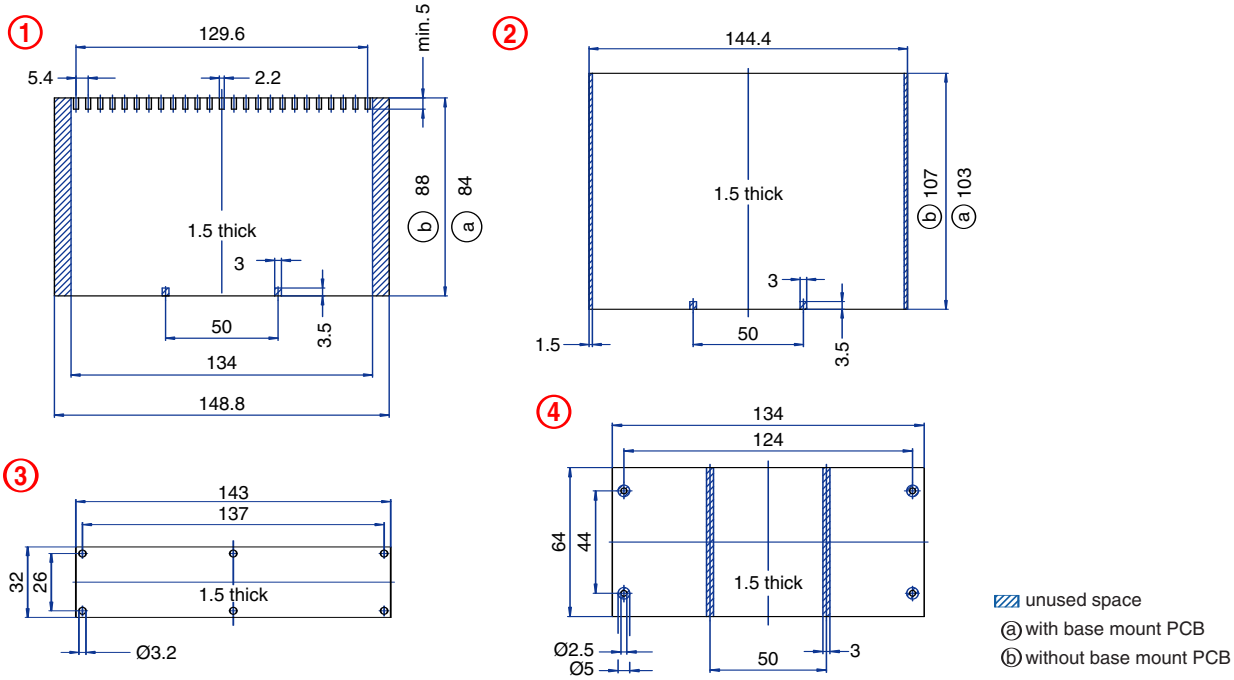

## 66 Terminal

**Pluggable Connection**

## TECHNICAL INFORMATION

**Electrical:**
10A, 300V, 22-12 AWG

**Housing Material:**
Glass-filled Polycarbonate

**Cover Material:**
Glass-filled Polycarbonate

**Temperature Range:**
Up to 125°C (257°F)

**Flammability Rating:**
UL94 V-O (V-2 Clear Panel)

**Color:**
Black Housing with Tan Cover

**Terminal Type:**
Box Clamp

**Terminal Screw Size:**
M3.5

**Recommended Torque:**
0.8Nm

**Max. PCB's:**
(5) Vertical
(1) Behind cover

**Mounting:**
35mm DIN Rail or optional panel mounting*

## ORDERING INFORMATION

| Part Number | Type | Description | PCB Connection |
|---|---|---|---|
| 90.680 | KO4721P | Solid Cover | Card Edge |
| 90.681 | KO4721P | Removable Cover Panel, Tan | Card Edge |
| 90.682 | KO4721P | Removable Cover Panel, Clear | Card Edge |

## ACCESSORIES

| Accessories | Part Number | Type |
|---|---|---|
| 1 Meter DIN Rail | 2511120/1M | TS35x7.5/1M |
| *Panel Mount Tab (need 3) | 93.001.2 | PMA |

## ENCLOSURE DRAWING (To convert to inches divide by 25.4.)

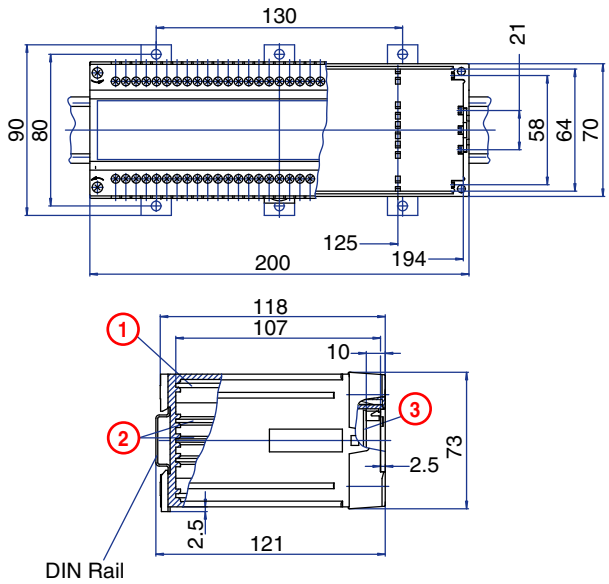


## PCB DRAWING (To convert to inches divide by 25.4.)

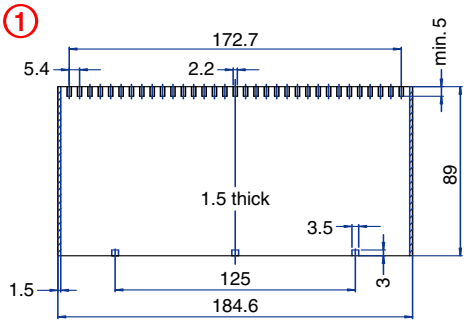


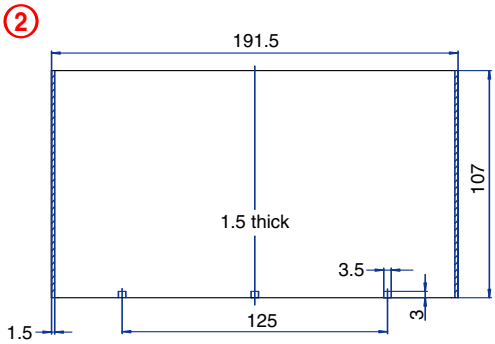


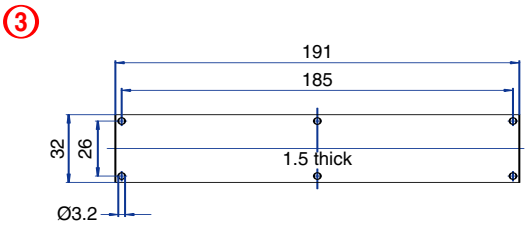


unused space

# KO4700 Enclosure Series

## 66 Terminal

**Pluggable Connection**

## TECHNICAL INFORMATION

**Electrical:**
10A, 300V, 22-12 AWG

**Housing Material:**
Glass-filled Polycarbonate

**Cover Material:**
Glass-filled Polycarbonate

**Temperature Range:**
Up to 125°C (257°F)

**Flammability Rating:**
UL94 V-O

**Color:**
Black Housing with Tan Cover

**Terminal Type:**
Box Clamp

**Terminal Screw Size:**
M3.5

**Recommended Torque:**
0.8Nm

**Max. PCB's:**
(11) Vertical
(1) Base Mount

**Mounting:**
35mm DIN Rail or optional panel mounting*

## ORDERING INFORMATION

| Part Number | Type | Description | PCB Connection |
|---|---|---|---|
| 90.710 | KO4723SP | Solid Cover | Card Edge |

## ACCESSORIES

| Accessories | Part Number | Type |
|---|---|---|
| 1 Meter DIN Rail | 2511120/1M | TS35x7.5/1M |
| *Panel Mount Tab (need 3) | 93.001.2 | PMA |

## ENCLOSURE DRAWING (To convert to inches divide by 25.4.)

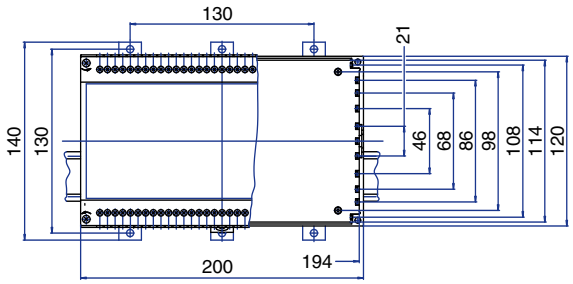


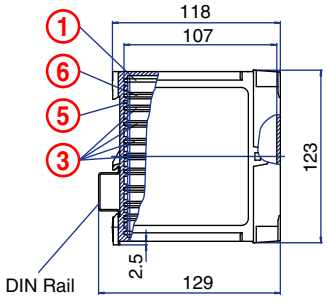


## PCB DRAWING (To convert to inches divide by 25.4.)

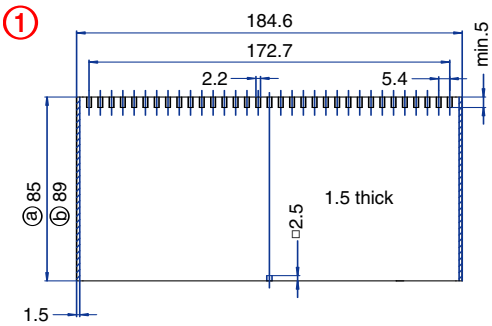


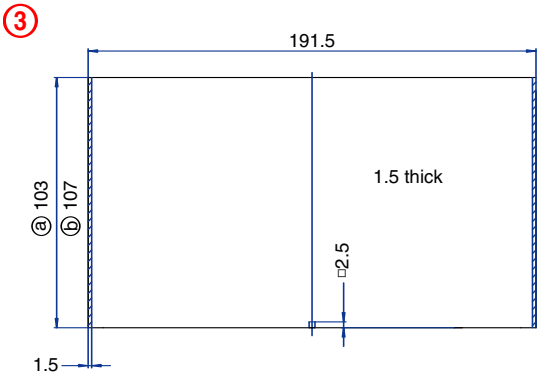


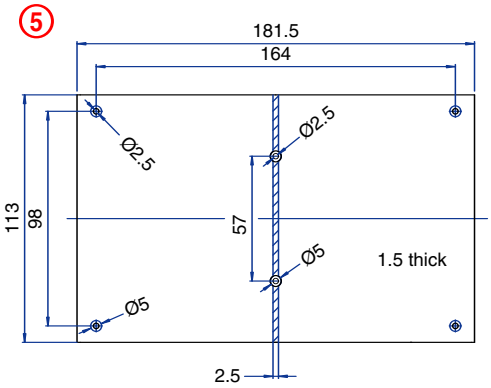


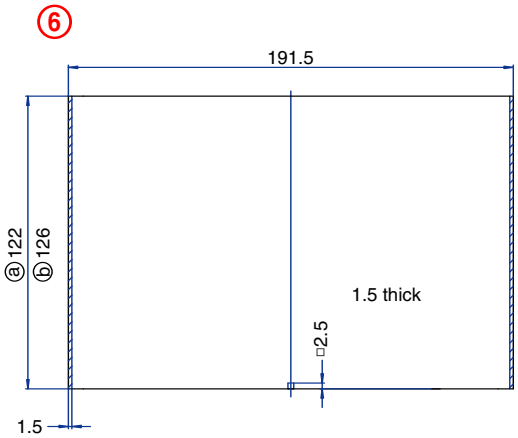


unused space
ⓐ with base mount PCB
ⓑ without base mount PCB

## 84 Terminal

**Pluggable and Solder Connection**

## TECHNICAL INFORMATION

**Electrical:**
10A, 300V, 22-14 AWG

**Housing Material:**
Glass-filled Polycarbonate

**Cover Material:**
Glass-filled Polycarbonate

**Temperature Range:**
Up to 125°C (257°F)

**Flammability Rating:**
UL94 V-O

**Color:**
Black Housing with Tan Cover

**Terminal Type:**
Screw / Pressure Plate

**Terminal Screw Size:**
M3.5

**Recommended Torque:**
0.8Nm

**Max. PCB's:**
(11) Vertical
(1) Base Mount

**Mounting:**
35mm DIN Rail or optional panel mounting*

## ORDERING INFORMATION

| Part Number | Type | Description | PCB Connection |
|---|---|---|---|
| 90.740 | KO4722DP | Solid Cover | Card Edge/ Wire Jumper |

## ACCESSORIES

| Accessories | Part Number | Type |
|---|---|---|
| 1 Meter DIN Rail | CA701/15-S | TS35x15/1M |
| *Panel Mount Tab (need 3) | 93.001.2 | PMA |

## ENCLOSURE DRAWING (To convert to inches divide by 25.4.)

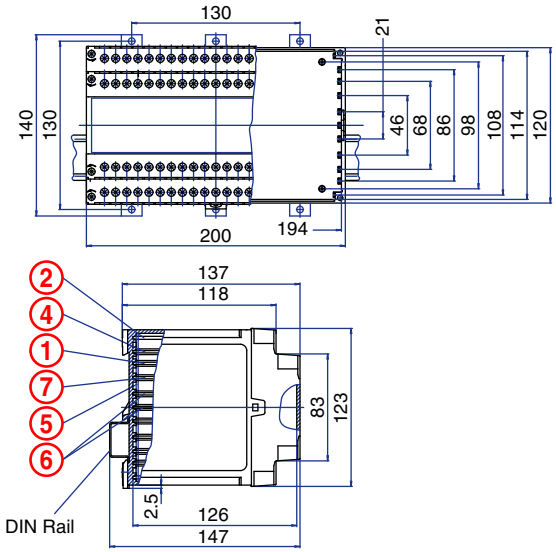


## PCB DRAWING (To convert to inches divide by 25.4.)

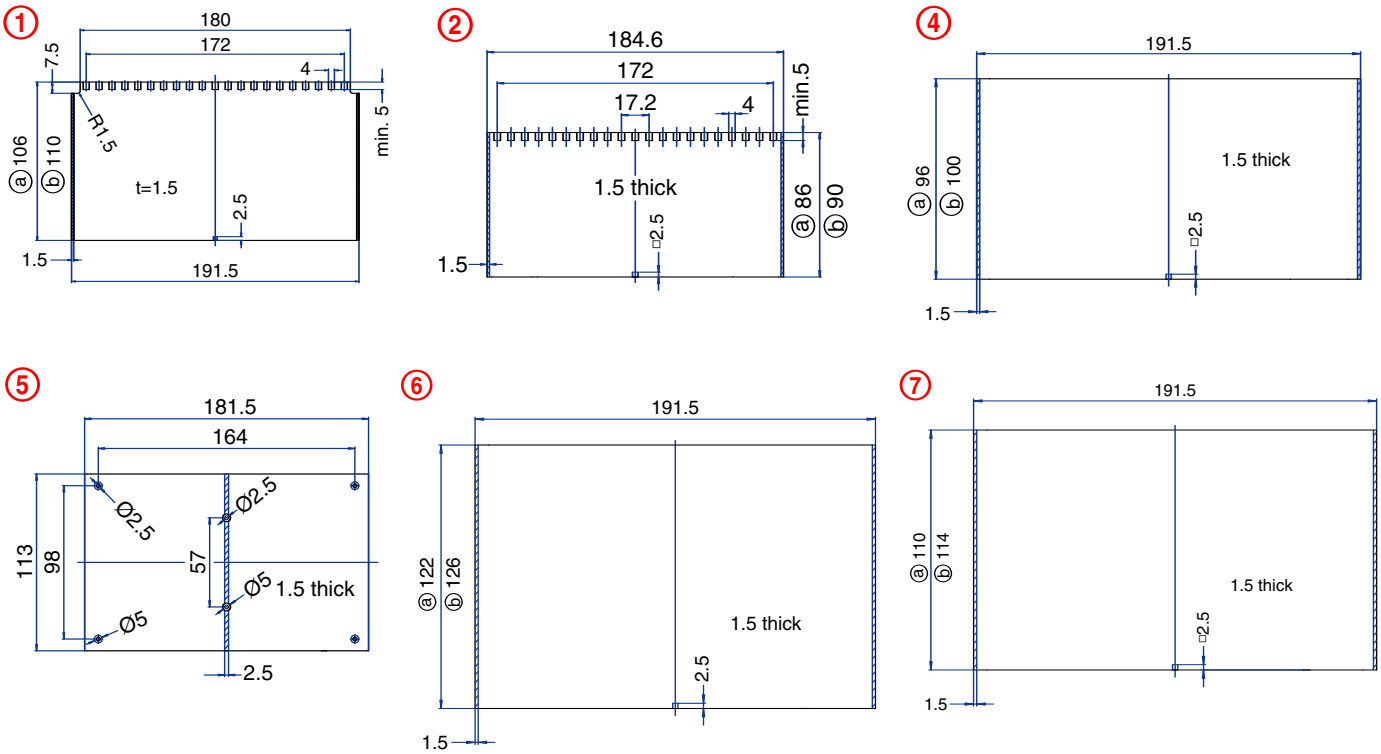


unused space
ⓐ with base mount PCB
ⓑ without base mount PCB

# KO4700 Enclosure Series

## 132 Terminal

**Pluggable Connection**

## TECHNICAL INFORMATION

**Electrical:**
10A, 300V, 22-12 AWG

**Housing Material:**
Glass-filled Polycarbonate

**Cover Material:**
Glass-filled Polycarbonate

**Temperature Range:**
Up to 125°C (257°F)

**Flammability Rating:**
UL94 V-O

**Color:**
Black Housing with Tan Cover

**Terminal Type:**
Box Clamp

**Terminal Screw Size:**
M3.5

**Recommended Torque:**
0.8Nm

**Max. PCB's:**
(11) Vertical
(1) Base Mount

**Mounting:**
35mm DIN Rail or optional panel mounting*

## ORDERING INFORMATION

| Part Number | Type | Description | PCB Connection |
|---|---|---|---|
| 90.770 | KO4723DP | Solid Cover | Card Edge |

## ACCESSORIES

| Accessories | Part Number | Type |
|---|---|---|
| 1 Meter DIN Rail | CA701/15-S | TS35x15/1M |
| *Panel Mount Tab (need 3) | 93.001.2 | PMA |

## ENCLOSURE DRAWING (To convert to inches divide by 25.4.)

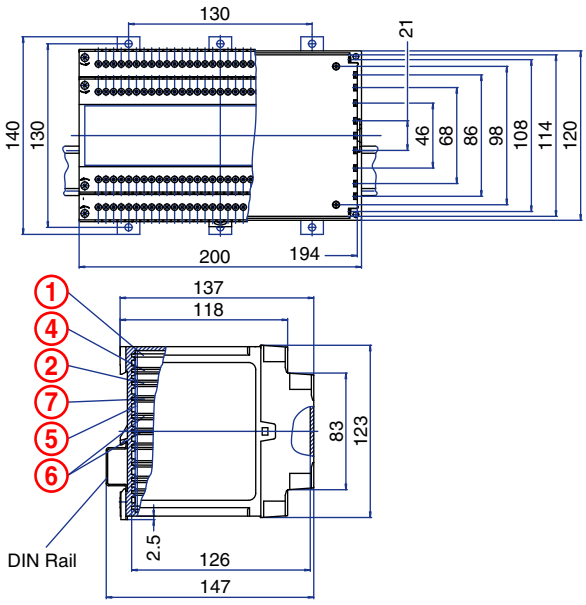


## PCB DRAWING (To convert to inches divide by 25.4.)

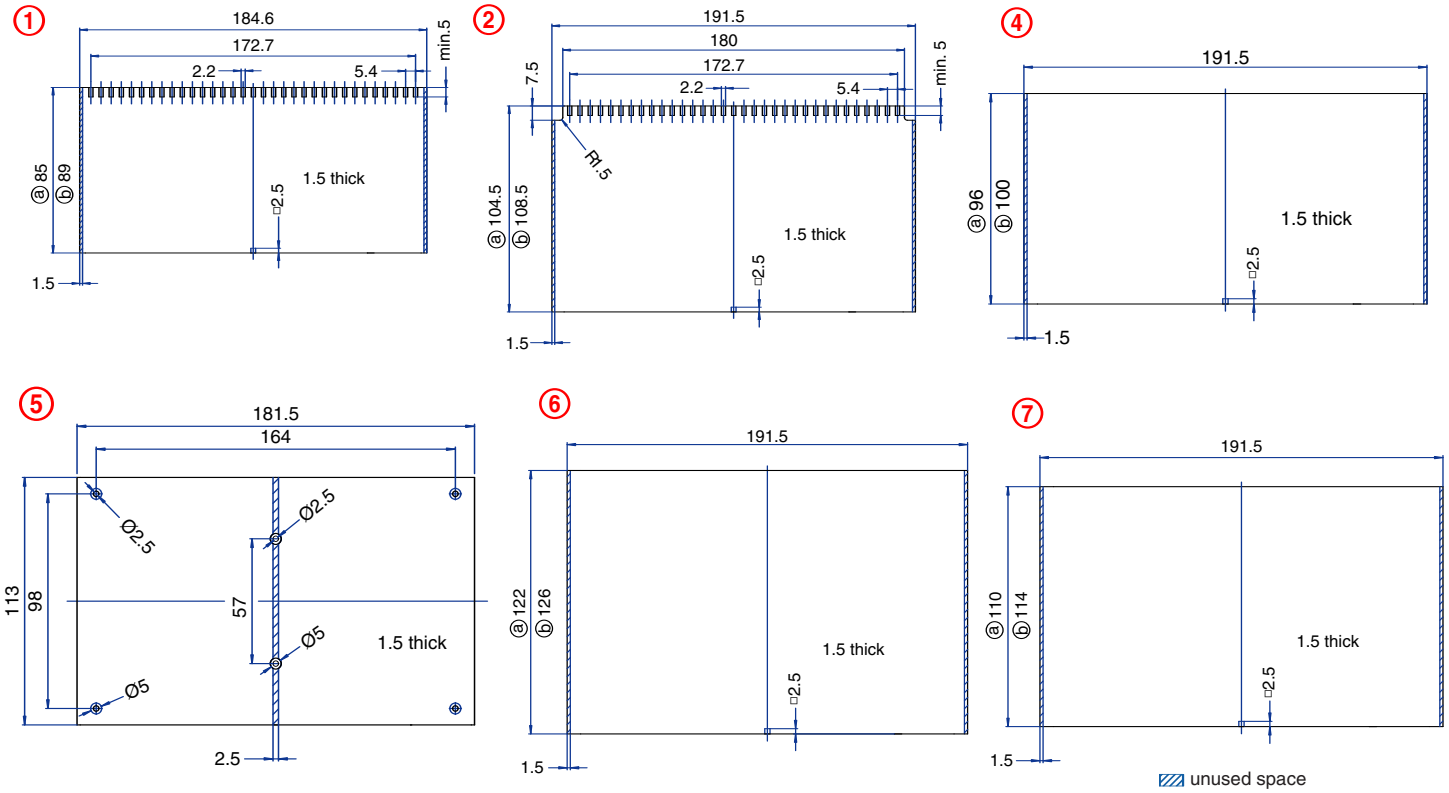


unused space
ⓐ with base mount PCB
ⓑ without base mount PCB

## 6 Terminal

### with 6 High Current Terminals

### Solder Connection

## TECHNICAL INFORMATION

**Electrical:**
40A, 300V, 18-8 AWG

**Housing Material:**
Glass-filled Polycarbonate

**Cover Material:**
Glass-filled Polycarbonate

**Temperature Range:**
Up to 125°C (257°F)

**Flammability Rating:**
UL94 V-O

**Color:**
Black Housing with Tan Cover

**Terminal Type:**
Box Clamp

**Terminal Screw Size:**
M3.5

**Recommended Torque:**
0.8Nm

**Max. PCB's:**
(2) Vertical
(2) Horizontal

**Mounting:**
35mm DIN Rail or
optional panel mounting*

## ORDERING INFORMATION

| Part Number | Type | Description |
|---|---|---|
| 90.815 | KO4734 | Removable High Current Wire Jumper Terminals |

## ACCESSORIES

| Accessories | Part Number | Type |
|---|---|---|
| 1 Meter DIN Rail | 2511120/1M | TS35x7.5/1M |
| *Panel Mount Tab | 93.001.2 | PMA |

## ENCLOSURE DRAWING (To convert to inches divide by 25.4.)

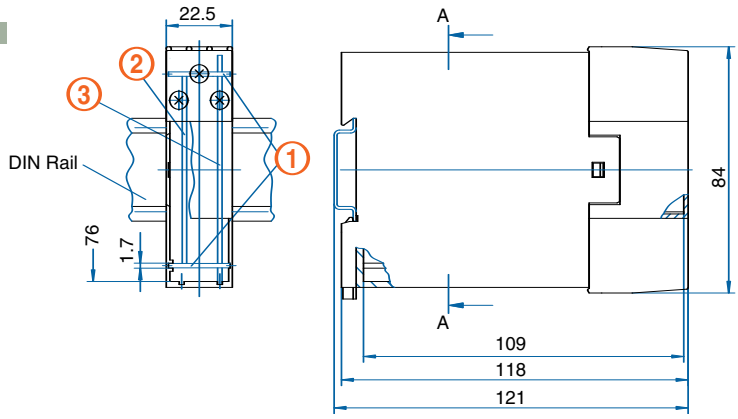


## PCB DRAWING (To convert to inches divide by 25.4.)

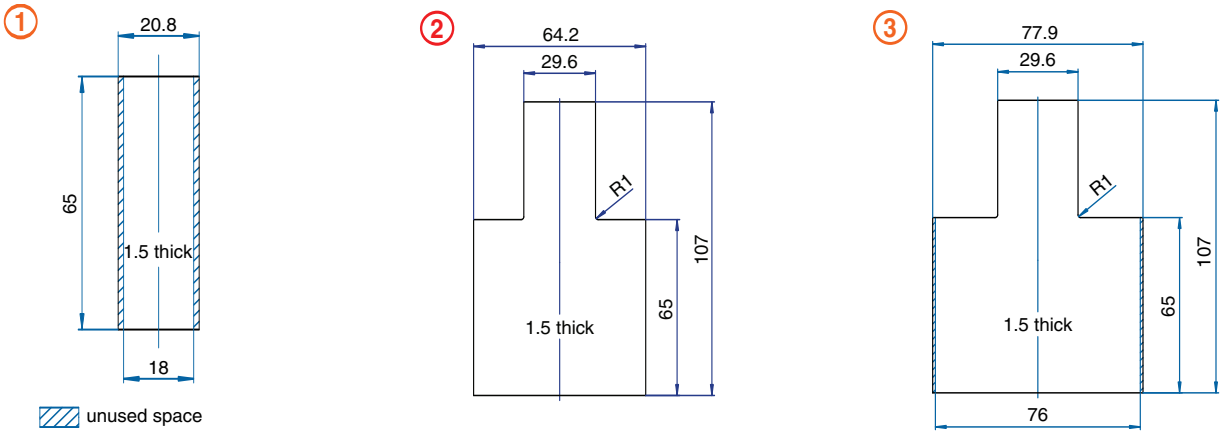

# KO4700 Enclosure Series - Modular

## 14 Terminal Maximum

**Pluggable Card Edge Connection**

## TECHNICAL INFORMATION

**Electrical:**
see chart for Amperages, 300V, 22-12 AWG

**Housing Material:**
Glass-filled Polycarbonate

**Cover Material:**
Glass-filled Polycarbonate

**Temperature Range:**
Up to 125°C (257°F)

**Flammability Rating:**
UL94 V-O (V-2 Clear Panel)

**Color:**
Black Housing with Tan Cover

**Terminal Type:**
Box clamp

**Terminal Screw Size:**
M3.5

**Recommended Torque:**
0.8Nm

**Max. PCB's:**
(2) Vertical
(2) Horizontal

**Mounting:**
35mm DIN Rail or optional panel mounting*

## COMPLETE ENCLOSURE CONSISTS OF

(1) Base Housing
(1) Cover Frame
(1) Cover Panel
(2) Terminal or blanking blocks

## ORDERING INFORMATION

| Part Number | Type | Description |
|---|---|---|
| 90.810 | KO4730H | Base Housing |
| 90.810.1 | KO4730F | Cover Frame |
| 90.810.2 | KO4730P | Cover Panel, Tan |
| 90.810.3 | KO4730P-C | Cover Panel, Clear |
| 90.810.4 | KO4730P/S | Cover Panel with terminal release slots, Tan |
| 90.810.5 | KO4730P-C/S | Cover Panel with terminal release slots, Clear |
| 90.803 | KO473xT/3 | Terminal Block, 3 terminals |
| 90.804 | KO473xT/4 | Terminal Block, 4 terminals |
| 90.807 | KO473xT/7 | Terminal Block, 7 terminals |
| 90.800 | KO473xT/B | Blanking Block, 0 terminals |

## ENCLOSURE DRAWING (To convert to inches divide by 25.4.)

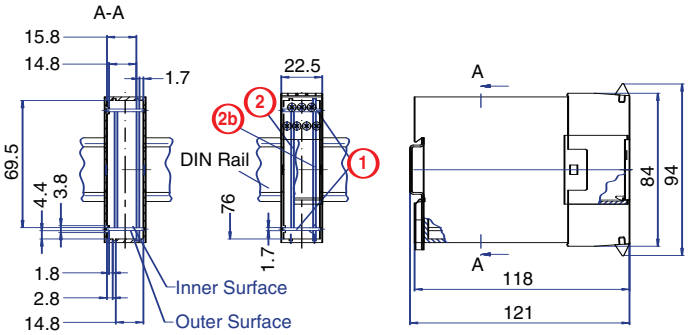


## ACCESSORIES

| Accessories | Part Number | Type |
|---|---|---|
| 1 Meter DIN Rail | 2511120/1M | TS35x7.5/1M |
| *Panel Mount Tab | 93.001.2 | PMA |

## AMPERAGE CHART

**Max. Current Carrying Capacity of Terminal Blocks**

| | 3 pole | 4 pole | 7 pole |
|---|---|---|---|
| | OOO | OOOO | OOO OOOO |
| Max Amperage of Terminal Blocks | 15A | 28A | 15A top row 28A bottom row |
| Max Amperage Per Terminal Point | 5A | 8A | 5A top row 8A bottom row |

## PCB DRAWING (To convert to inches divide by 25.4.)

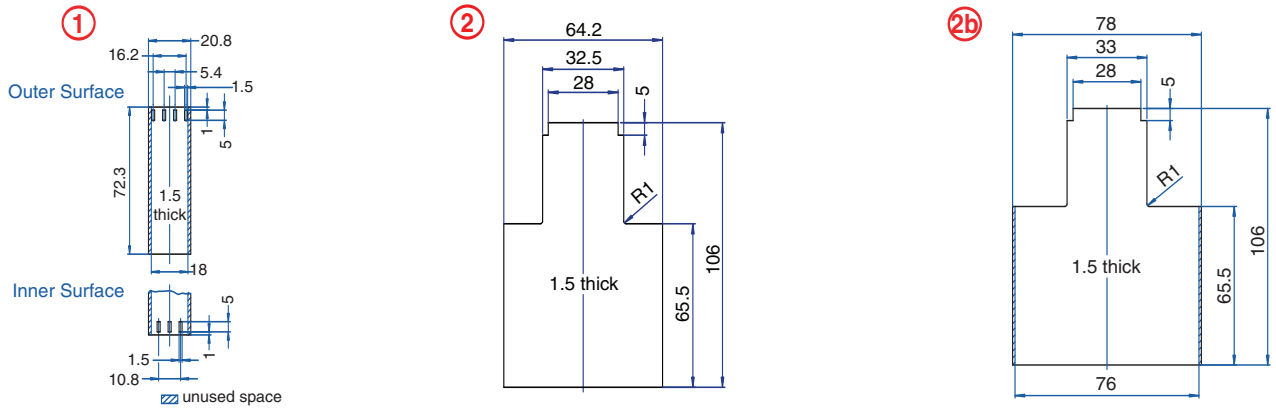

Altech

## 20 Terminal Maximum

**with 6 High Current Terminals**

**Pluggable Card Edge Connection/ Solder Connection**

## TECHNICAL INFORMATION

**Electrical:**
see chart for Amperages, 300V, 22-12 AWG standard 18-8 AWG high current

**Housing Material:**
Glass-filled Polycarbonate

**Cover Material:**
Glass-filled Polycarbonate

**Temperature Range:**
Up to 125°C (257°F)

**Flammability Rating:**
UL94 V-O (V-2 Clear Panel)

**Color:**
Black Housing with Tan Cover

**Terminal Type:**
Box clamp

**Terminal Screw Size:**
M3.5

**Recommended Torque:**
0.8Nm

**Max. PCB's:**
(2) Vertical
(2) Horizontal

**Mounting:**
35mm DIN Rail or optional panel mounting*

## COMPLETE ENCLOSURE CONSISTS OF

(1) Base Housing
(1) Center Cover
(2) Terminal or blanking blocks
(2) High current terminal blocks

## ORDERING INFORMATION

| Part Number | Type | Description |
|---|---|---|
| 90.825 | KO4735H | Base Housing |
| 90.825.1 | KO4735F | Cover Frame |
| 90.820.2 | KO4731/5P | Cover Panel, Tan |
| 90.820.3 | KO4731/5P-C | Cover Panel, Clear |
| 90.820.4 | KO4731/5P/S | Cover Panel with terminal release slots, Tan |
| 90.820.5 | KO4731/5P-C/S | Cover Panel with terminal release slots, Clear |
| 90.803 | KO473xT/3 | Terminal Block, 3 terminals |
| 90.804 | KO473xT/4 | Terminal Block, 4 terminals |
| 90.807 | KO473xT/7 | Terminal Block, 7 terminals |
| 90.800 | KO473xT/B | Blanking Block, 0 terminals |
| 90.808 | KO473xHCT | High Current Block, 3 terminals |

## ENCLOSURE DRAWING (To convert to inches divide by 25.4.)

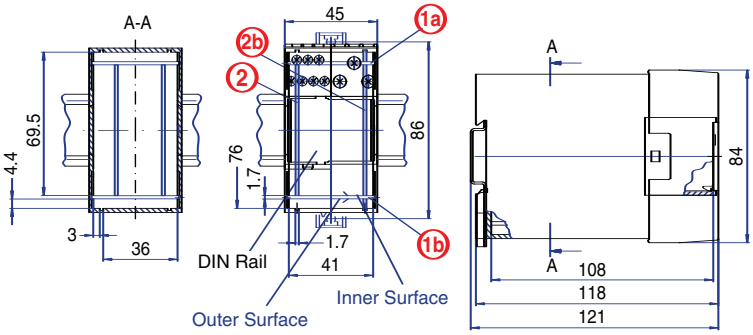


## ACCESSORIES

| Accessories | Part Number | Type |
|---|---|---|
| 1 Meter DIN Rail | 2511120/1M | TS35x7.5/1M |
| *Panel Mount Tab | 93.001.2 | PMA |

## AMPERAGE CHART

**Max. Current Carrying Capacity of Terminal Blocks**

| | 3 pole ○○○ | 4 pole ○○○○ | 7 pole ○○○ ○○○○ | High Current ○ ○○ |
|---|---|---|---|---|
| Max Amperage of Terminal Blocks | 15A | 28A | 15A top row 28A bottom row | 40A |
| Max Amperage Per Terminal Point | 8A | 8A | 5A top row 8A bottom row | 40A |

## PCB DRAWING (To convert to inches divide by 25.4.)

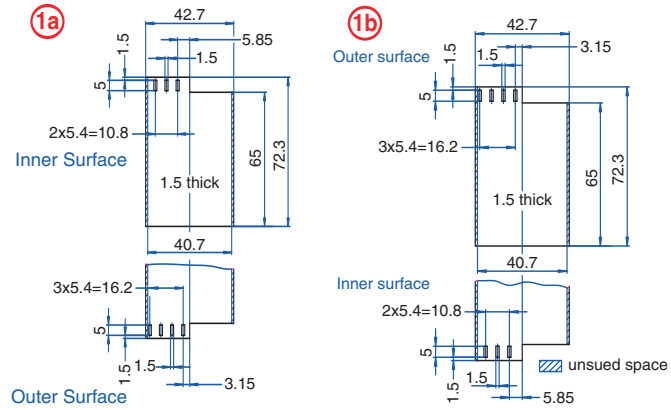


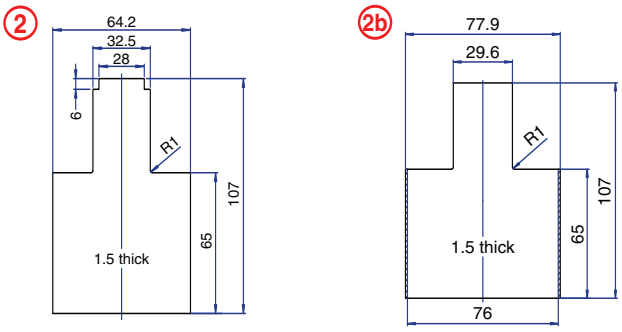

## 28 Terminal Maximum

**Pluggable Card Edge Connection**

## TECHNICAL INFORMATION

**Electrical:**
see chart for Amperages, 300V, 22-12 AWG

**Housing Material:**
Glass-filled Polycarbonate

**Cover Material:**
Glass-filled Polycarbonate

**Temperature Range:**
Up to 125°C (257°F)

**Flammability Rating:**
UL94 V-O (V-2 Clear Panel)

**Color:**
Black Housing with Tan Cover

**Terminal Type:**
Box clamp

**Terminal Screw Size:**
M3.5

**Recommended Torque:**
0.8Nm

**Max. PCB's:**
(2) Vertical
(2) Horizontal

**Mounting:**
35mm DIN Rail or optional panel mounting*

## COMPLETE ENCLOSURE CONSISTS OF

(1) Base Housing
(1) Cover Frame
(1) Cover Panel
(4) Terminal or blanking blocks

## ORDERING INFORMATION

| Part Number | Type | Description |
|---|---|---|
| 90.820 | KO4731H | Base Housing |
| 90.820.1 | KO4731F | Cover Frame |
| 90.820.2 | KO4731/5P | Cover Panel, Tan |
| 90.820.3 | KO4731/5P-C | Cover Panel, Clear |
| 90.820.4 | KO4731/5P/S | Cover Panel with terminal release slots, Tan |
| 90.820.5 | KO4731/5P-C/S | Cover Panel with terminal release slots, Clear |
| 90.803 | KO473xT/3 | Terminal Block, 3 terminals |
| 90.804 | KO473xT/4 | Terminal Block, 4 terminals |
| 90.807 | KO473xT/7 | Terminal Block, 7 terminals |
| 90.800 | KO473xT/B | Blanking Block, 0 terminals |

## ACCESSORIES

| Accessories | Part Number | Type |
|---|---|---|
| 1 Meter DIN Rail | 2511120/1M | TS35x7.5/1M |
| *Panel Mount Tab | 93.001.2 | PMA |

## AMPERAGE CHART

**Max. Current Carrying Capacity of Terminal Blocks**

| | 3 pole | 4 pole | 7 pole |
|---|---|---|---|
| | OOO | OOOO | OOO OOOO |
| Max Amperage of Terminal Blocks | 15A | 28A | 15A top row 28A bottom row |
| Max Amperage Per Terminal Point | 5A | 8A | 5A top row 8A bottom row |

## ENCLOSURE DRAWING (To convert to inches divide by 25.4.)

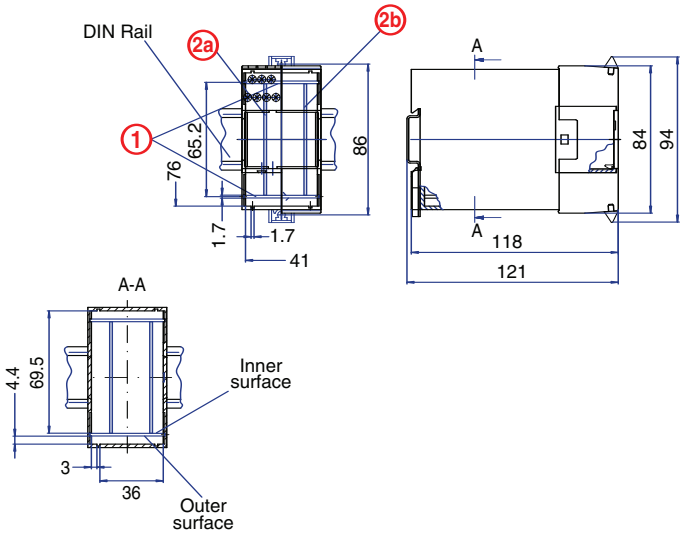


## PCB DRAWING (To convert to inches divide by 25.4.)

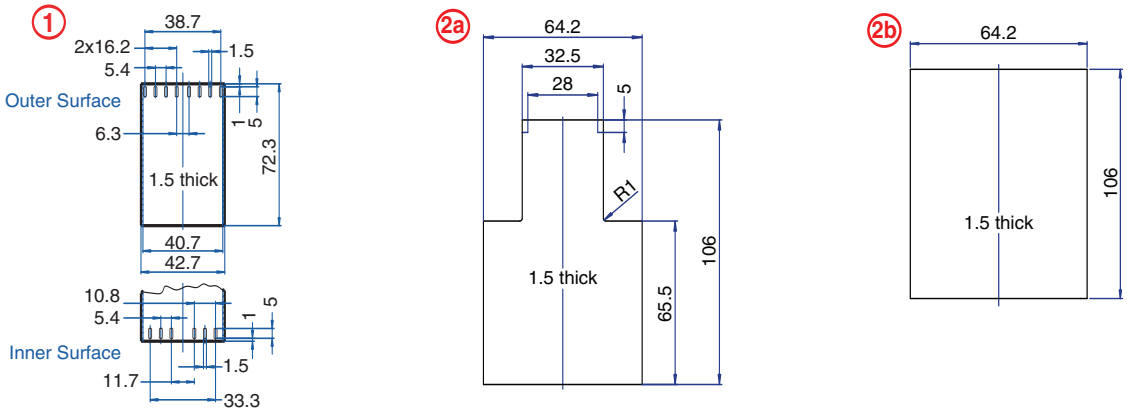

## 34 Terminal Maximum

**with 6 High Current Terminals**
**Pluggable Card Edge Connection/ Solder Connection**

## TECHNICAL INFORMATION

**Electrical:**
see chart for Amperages, 300V, 22-12 AWG standard 18-8 AWG high current

**Housing Material:**
Glass-filled Polycarbonate

**Cover Material:**
Glass-filled Polycarbonate

**Temperature Range:**
Up to 125°C (257°F)

**Flammability Rating:**
UL94 V-O (V-2 Clear Panel)

**Color:**
Black Housing with Tan Cover

**Terminal Type:**
Box clamp

**Terminal Screw Size:**
M3.5

**Recommended Torque:**
0.8Nm

**Max. PCB's:**
(3) Vertical
(2) Horizontal
(1) Parallel with cover

**Mounting:**
35mm DIN Rail or optional panel mounting*

## COMPLETE ENCLOSURE CONSISTS OF

(1) Base Housing
(1) Center Cover
(4) Terminal or blanking blocks
(2) High current terminal blocks

## ORDERING INFORMATION

| Part Number | Type | Description |
|---|---|---|
| 90.830 | KO4732/6H | Base Housing |
| 90.830.6 | KO4736F | Center Cover |
| 90.803 | KO473xT/3 | Terminal Block, 3 terminals |
| 90.804 | KO473xT/4 | Terminal Block, 4 terminals |
| 90.807 | KO473xT/7 | Terminal Block, 7 terminals |
| 90.800 | KO473xT/B | Blanking Block, 0 terminals |
| 90.808 | KO473xHCT | High Current Block, 3 terminals |

## ENCLOSURE DRAWING (To convert to inches divide by 25.4.)

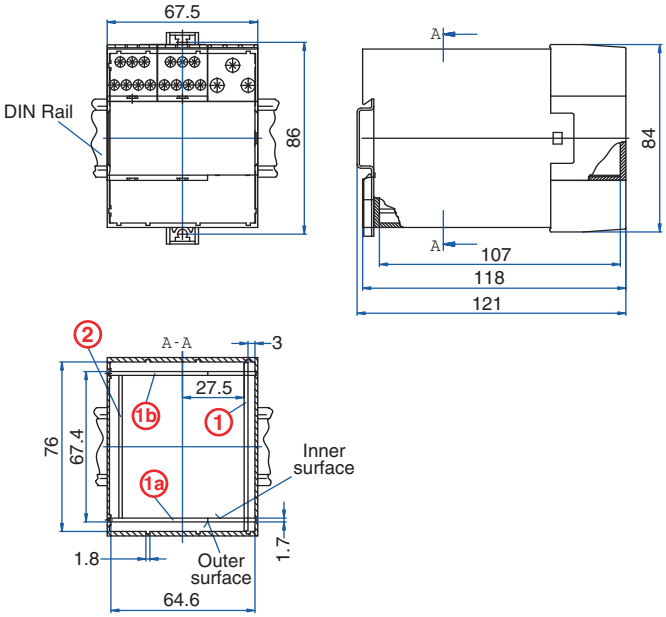


## ACCESSORIES

| Accessories | Part Number | Type |
|---|---|---|
| 1 Meter DIN Rail | 2511120/1M | TS35x7.5/1M |
| *Panel Mount Tab (need 2) | 93.001.2 | PMA |

## AMPERAGE CHART

**Max. Current Carrying Capacity of Terminal Blocks**

| | 3 pole | 4 pole | 7 pole | High Current |
|---|---|---|---|---|
| Max Amperage of Terminal Blocks | 15A | 28A | 15A top row<br>28A bottom row | 40A |
| Max Amperage Per Terminal Point | 8A | 8A | 5A top row<br>8A bottom row | 40A |

## PCB DRAWING (To convert to inches divide by 25.4.)

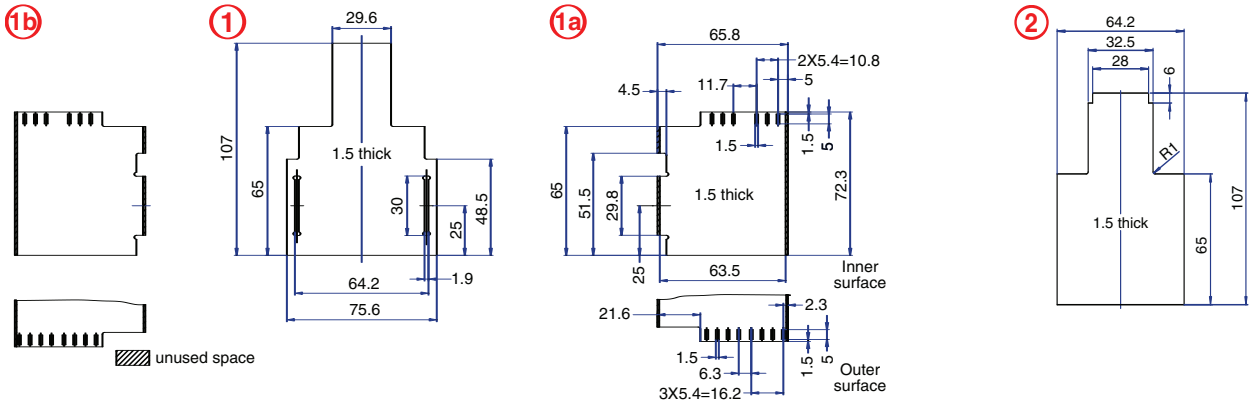

## 40 Terminal Maximum

**with 12 High Current Terminals**

**Pluggable Card Edge Connection/ Solder Connection**

## TECHNICAL INFORMATION

**Electrical:**
see chart for Amperages, 300V, 22-12 AWG standard 18-8 AWG high current

**Housing Material:**
Glass-filled Polycarbonate

**Cover Material:**
Glass-filled Polycarbonate

**Temperature Range:**
Up to 125°C (257°F)

**Flammability Rating:**
UL94 V-O (V-2 Clear Panel)

**Color:**
Black Housing with Tan Cover

**Terminal Type:**
Box clamp

**Terminal Screw Size:**
M3.5

**Recommended Torque:**
0.8Nm

**Max. PCB's:**
(4) Vertical
(2) Horizontal
(1) Parallel with cover

**Mounting:**
35mm DIN Rail or optional panel mounting*

## COMPLETE ENCLOSURE CONSISTS OF

(1) Base Housing
(1) Center Cover
(4) Terminal or blanking blocks
(4) High current terminal blocks

## ORDERING INFORMATION

| Part Number | Type | Description |
|---|---|---|
| 90.845 | KO4737H | Base Housing |
| 90.845.6 | KO4737F | Center Cover |
| 90.803 | KO473xT/3 | Terminal Block, 3 terminals |
| 90.804 | KO473xT/4 | Terminal Block, 4 terminals |
| 90.807 | KO473xT/7 | Terminal Block, 7 terminals |
| 90.800 | KO473xT/B | Blanking Block, 0 terminals |
| 90.808 | KO473xHCT | High Current Block, 3 terminals |

## ENCLOSURE DRAWING (To convert to inches divide by 25.4.)

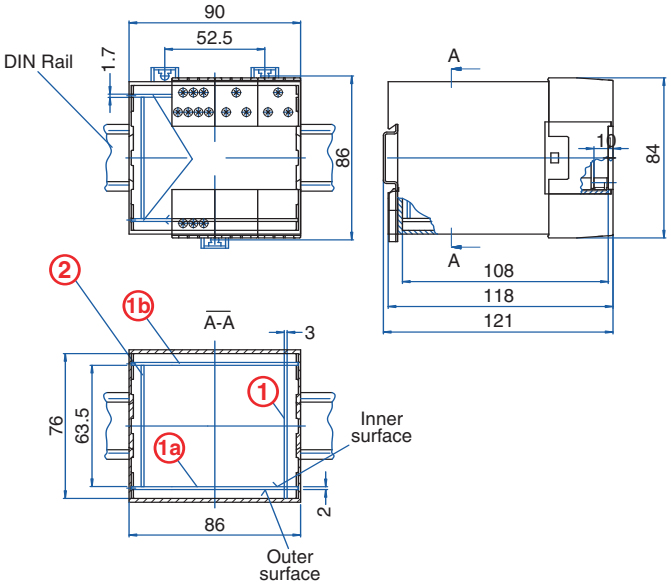


## ACCESSORIES

| Accessories | Part Number | Type |
|---|---|---|
| 1 Meter DIN Rail | 2511120/1M | TS35x7.5/1M |
| *Panel Mount Tab (need 2) | 93.001.2 | PMA |

## AMPERAGE CHART

**Max. Current Carrying Capacity of Terminal Blocks**

| | 3 pole ○○○ | 4 pole ○○○○ | 7 pole ○○○ ○○○○ | High Current ○ ○○ |
|---|---|---|---|---|
| Max Amperage of Terminal Blocks | 15A | 28A | 15A top row 28A bottom row | 40A |
| Max Amperage Per Terminal Point | 8A | 8A | 5A top row 8A bottom row | 40A |

## PCB DRAWING (To convert to inches divide by 25.4.)

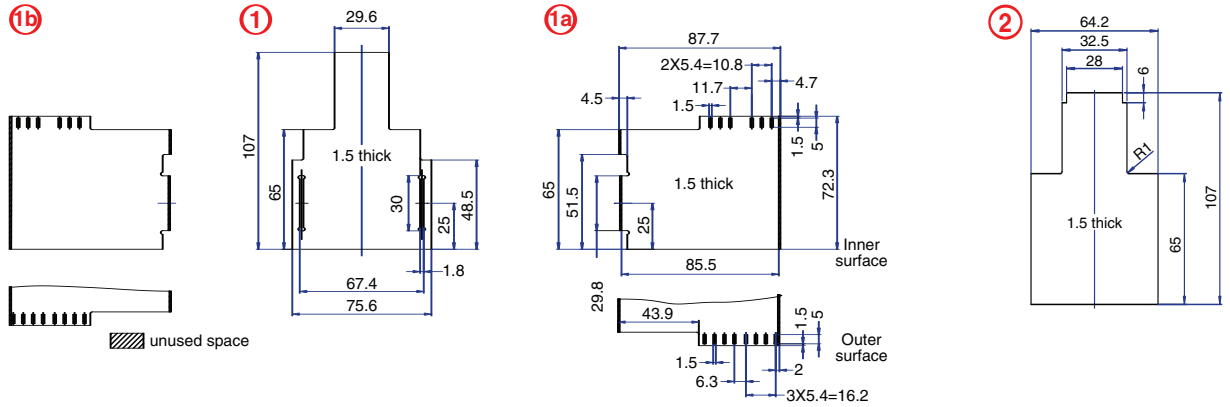

## 42 Terminal Maximum

**Pluggable Card Edge Connection**

## TECHNICAL INFORMATION

**Electrical:**
see chart for Amperages, 300V, 22-12 AWG

**Housing Material:**
Glass-filled Polycarbonate

**Cover Material:**
Glass-filled Polycarbonate

**Temperature Range:**
Up to 125°C (257°F)

**Flammability Rating:**
UL94 V-O (V-2 Clear Panel)

**Color:**
Black Housing with Tan Cover

**Terminal Type:**
Box clamp

**Terminal Screw Size:**
M3.5

**Recommended Torque:**
0.8Nm

**Max. PCB's:**
(3) Vertical
(2) Horizontal
(1) Parallel with cover

**Mounting:**
35mm DIN Rail or optional panel mounting*

## COMPLETE ENCLOSURE CONSISTS OF

(1) Base Housing
(1) Cover Frame
(1) Cover Panel
(6) Terminal or blanking blocks

## ORDERING INFORMATION

| Part Number | Type | Description |
|---|---|---|
| 90.830 | KO4732/6H | Base Housing |
| 90.830.1 | KO4732F | Cover Frame |
| 90.830.2 | KO4732P | Cover Panel, Tan |
| 90.830.3 | KO4732P-C | Cover Panel, Clear |
| 90.830.4 | KO4732P/S | Cover Panel with terminal release slots, Tan |
| 90.830.5 | KO4732P-C/S | Cover Panel with terminal release slots, Clear |
| 90.803 | KO473xT/3 | Terminal Block, 3 terminals |
| 90.804 | KO473xT/4 | Terminal Block, 4 terminals |
| 90.807 | KO473xT/7 | Terminal Block, 7 terminals |
| 90.800 | KO473xT/B | Blanking Block, 0 terminals |

## ENCLOSURE DRAWING (To convert to inches divide by 25.4.)

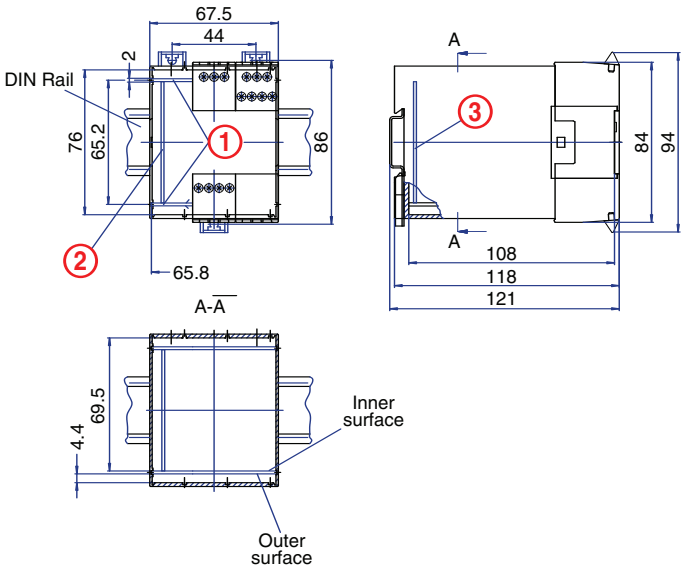


## ACCESSORIES

| Accessories | Part Number | Type |
|---|---|---|
| 1 Meter DIN Rail | 2511120/1M | TS35x7.5/1M |
| *Panel Mount Tab (need 2) | 93.001.2 | PMA |

## AMPERAGE CHART

**Max. Current Carrying Capacity of Terminal Blocks**

| | 3 pole | 4 pole | 7 pole |
|---|---|---|---|
| | OOO | OOOO | OOO<br>OOOO |
| Max Amperage of Terminal Blocks | 15A | 28A | 15A top row<br>28A bottom row |
| Max Amperage Per Terminal Point | 5A | 8A | 5A top row<br>8A bottom row |

## PCB DRAWING (To convert to inches divide by 25.4.)

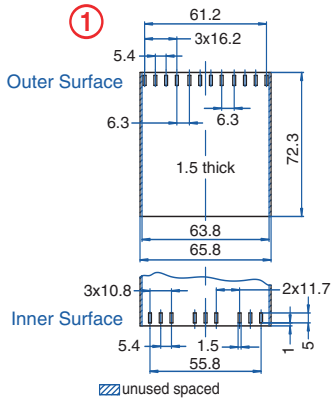


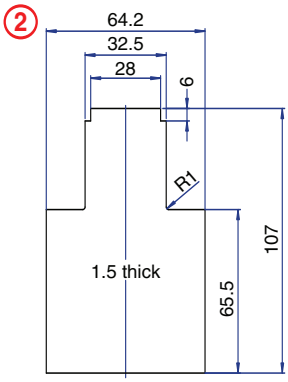


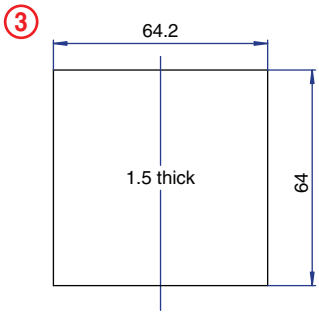

# KO4700 Enclosure Series - Modular

## 56 Terminal Maximum

**Pluggable Card Edge Connection**

## TECHNICAL INFORMATION

**Electrical:**
see chart for Amperages, 300V, 22-12 AWG

**Housing Material:**
Glass-filled Polycarbonate

**Cover Material:**
Glass-filled Polycarbonate

**Temperature Range:**
Up to 125°C (257°F)

**Flammability Rating:**
UL94 V-O (V-2 Clear Panel)

**Color:**
Black Housing with Tan Cover

**Terminal Type:**
Box clamp

**Terminal Screw Size:**
M3.5

**Recommended Torque:**
0.8Nm

**Max. PCB's:**
(4) Vertical
(2) Horizontal
(1ea.) Parallel with/ behind cover

**Mounting:**
35mm DIN Rail or optional panel mounting*

## COMPLETE ENCLOSURE CONSISTS OF

(1) Base Housing
(1) Cover Frame
(1) Cover Panel
(8) Terminal or blanking blocks

## ORDERING INFORMATION

| Part Number | Type | Description |
|---|---|---|
| 90.840 | KO4733H | Base Housing |
| 90.840.1 | KO4733F | Cover Frame |
| 90.840.2 | KO4733P | Cover Panel, Tan |
| 90.840.3 | KO4733P-C | Cover Panel, Clear |
| 90.840.4 | KO4733P/S | Cover Panel with terminal release slots, Tan |
| 90.840.5 | KO4733P-C/S | Cover Panel with terminal release slots, Clear |
| 90.803 | KO473xT/3 | Terminal Block, 3 terminals |
| 90.804 | KO473xT/4 | Terminal Block, 4 terminals |
| 90.807 | KO473xT/7 | Terminal Block, 7 terminals |
| 90.800 | KO473xT/B | Blanking Block, 0 terminals |

## ENCLOSURE DRAWING (To convert to inches divide by 25.4.)

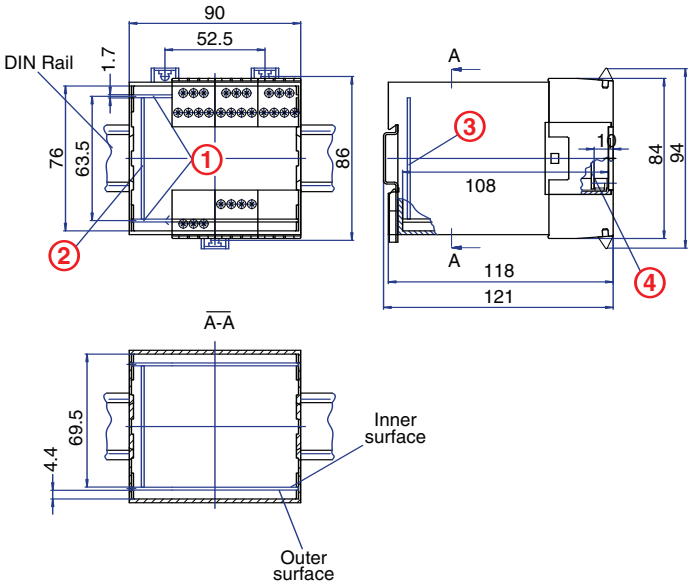


## ACCESSORIES

| Accessories | Part Number | Type |
|---|---|---|
| 1 Meter DIN Rail | 2511120/1M | TS35x7.5/1M |
| *Panel Mount Tab (need 2) | 93.001.2 | PMA |

## AMPERAGE CHART

**Max. Current Carrying Capacity of Terminal Blocks**

| | 3 pole ○○○ | 4 pole ○○○○ | 7 pole ○○○ ○○○○ |
|---|---|---|---|
| Max Amperage of Terminal Blocks | 15A | 28A | 15A top row<br>28A bottom row |
| Max Amperage Per Terminal Point | 5A | 8A | 5A top row<br>8A bottom row |

## PCB DRAWING (To convert to inches divide by 25.4.)

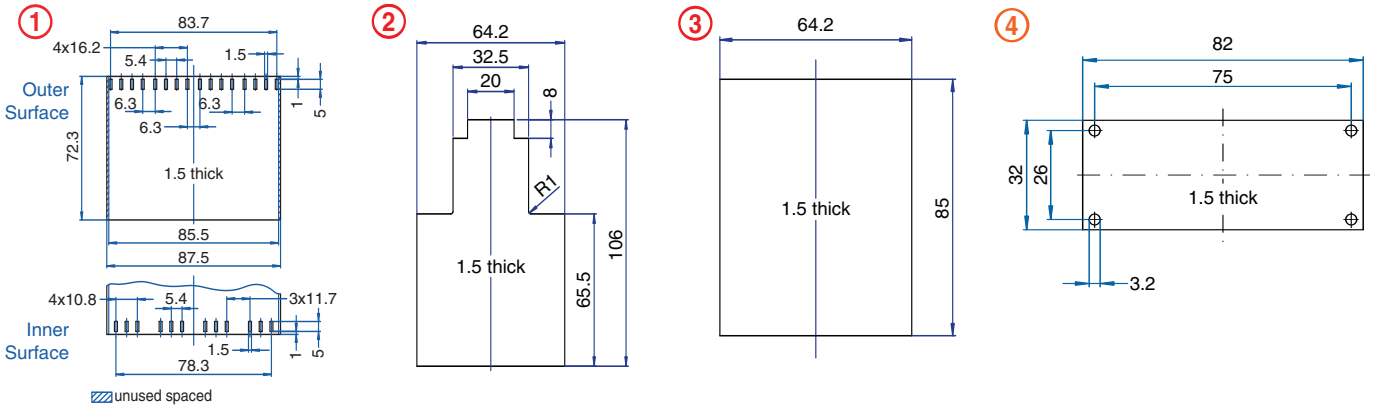

**The KO4300 Series Enclosures** feature high density double level terminals making them ideal for many electronic applications. They are small to medium in size ranging from 16 to 64 termnals. There are 4 widths available each having a short and tall version available.

## MATERIALS
Housing Shell: Polycarbonate, 10% Glass Filled
Terminal Housing: Polyamide, 40% Glass Filled
Terminal: Tin-plated Steel

## TEMPERATURE RATINGS:
Housing: 115°C (239°F) UL94VO
Terminal Housing: 290°C (554°F) UL94VO
Standard Color: Light Gray

## PROTECTION
KO4300 series enclosures have an IP20 rating (finger protected) and meet VBG4 and other European accident prevention requirements.

## CONSTRUCTION
The KO4300 enclosure series housings are supplied as unassembled kits. Each kit consists of a housing base, terminal cover side parts, terminal blocks and a front plate. The double level terminal design keeps the enclosure width to a minimum freeing valuable DIN rail space. The terminals are machine solderable with right angle pins. Integral printed circuit board guides are molded into the housing base to help with proper board insertion and containment. Boards are mounted vertically in the enclosure, perpendicular to the DIN rail.

## TERMINALS
Rising clamp screw terminals are used with the KO4300 series enclosures. Wires to be terminated are squeezed between the bottom of the rising clamp and the terminal strip for reliable, gas-tight connections. The terminals can be machine soldered to the board in the same step as the other components to save time and labor. All terminals have funnel shaped wire openings to eliminate wire fraying. The terminal screws can be turned with a flat tip or a #2 Philips screwdriver.

## MOUNTING
The KO4300 series can easily be mounted on standard 35mm DIN rail by means of the integral mounting foot and DIN clip.

## CUSTOMIZATION
Many custom options are available for the KO4300 series enclosures. Some of the available options are:

- Partial terminal loading
- Internal/External bus connections
- PCB grounding to the DIN rail
- Side ventilation slots
- Machining of custom holes
- RJ45 and DB9 openings in front plate

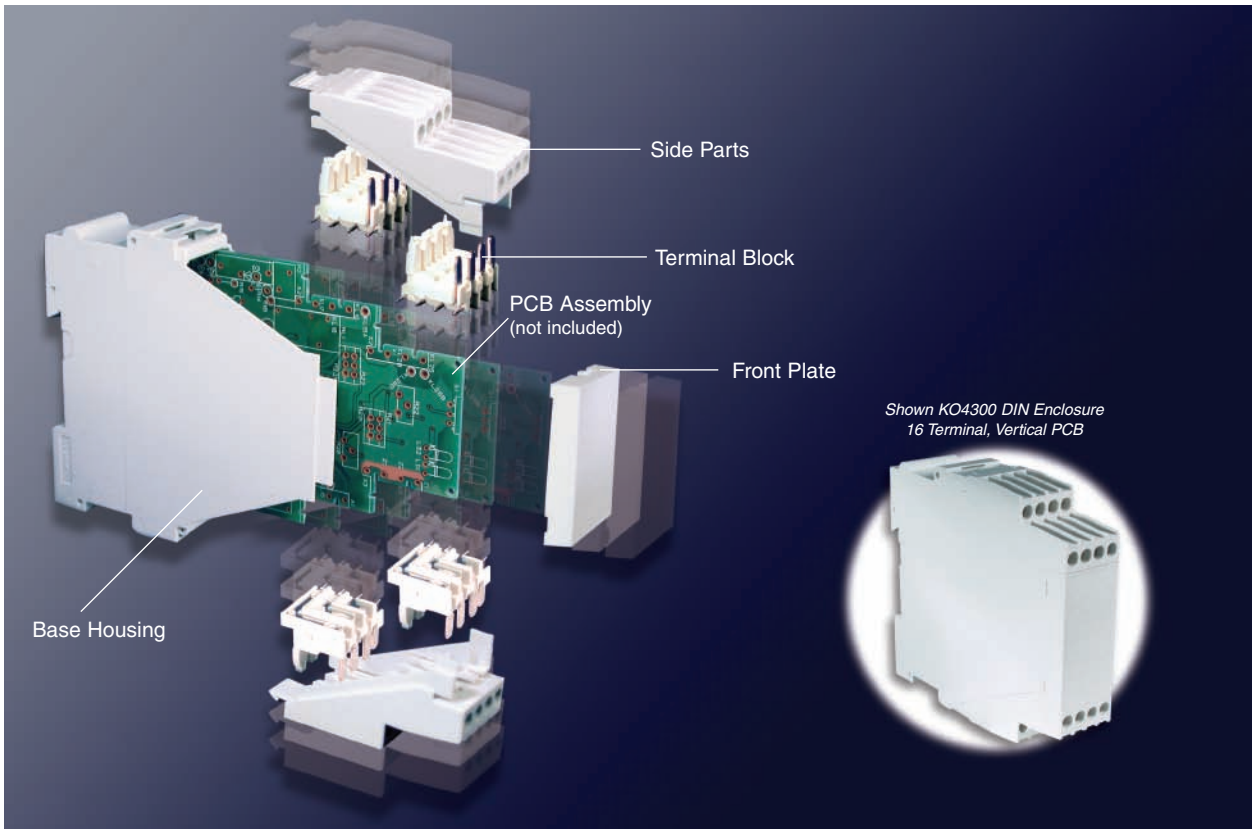


## HOUSING ASSEMBLY
- Place all assemblies on a level surface
- Terminal blocks should be pre-assembled on the PCB
- Push the side parts over the terminal blocks ensuring that the guide pins of the terminal blocks slide into the holes of the side parts
- Snap the front plate onto the pre-mounted side parts
- Slide the PCB of the upper section into the guide groves of the base
- Slide the upper section into the base. Make sure that the wall areas overlap correctly and the guide element of the base slides in the mating recess of the base.
- Push the assembly completely together so that the clips on the side parts snap into the recesses in the base

## 16 Terminal
### Vertical PCB

### TECHNICAL INFORMATION

**Electrical:**
16A, 300V, 22-12 AWG
**Housing Material:**
Glass-filled Polycarbonate
**Terminal Block Material:**
Glass-filled Polyamide
**Temperature Range:**
Up to 115°C (239°F), Housing
290°C (554°F), Terminals
**Flammability Rating:**
UL94 V-O
**Color:** Light Gray

**Terminal Type:**
Screw / Rising Clamp
**Terminal Screw Size:**
M3.5
**Recommended Torque:**
0.8Nm
**Max. PCB's:**
(2) Vertical
**Mounting:**
35mm DIN Rail

### ORDERING INFORMATION

| Part Number | Type | Description | PCB Connection |
|---|---|---|---|
| 90.900 | KO4323 | Right Angle Pins | Machine Solder |

### ACCESSORIES

| Accessories | Part Number | Type |
|---|---|---|
| 1 Meter DIN Rail | 2511120/1M | TS35x7.5/1M |

### ENCLOSURE DRAWING (To convert to inches divide by 25.4.)

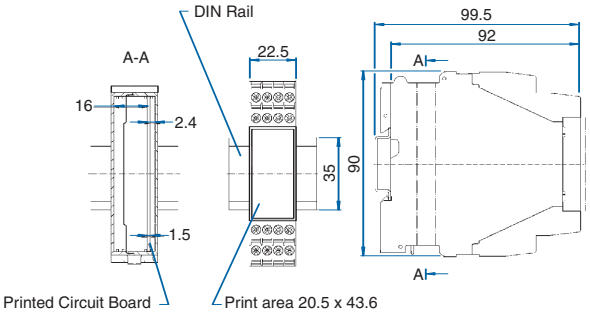


### PCB DRAWING (To convert to inches divide by 25.4.)

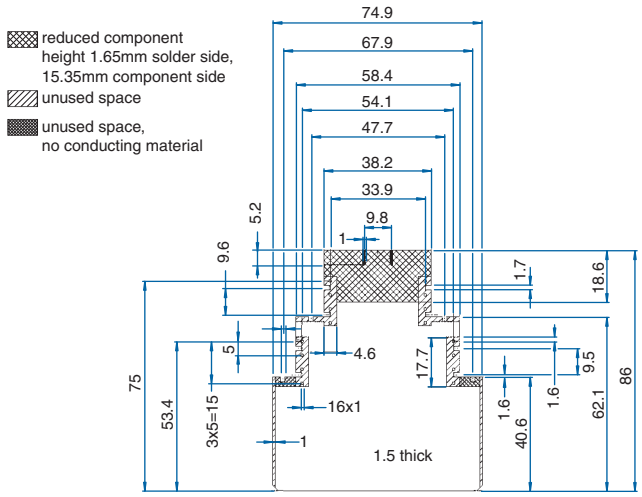


## 16 Terminal
### Tall Vertical PCB

### TECHNICAL INFORMATION

**Electrical:**
16A, 300V, 22-12 AWG
**Housing Material:**
Glass-filled Polycarbonate
**Terminal Block Material:**
Glass-filled Polyamide
**Temperature Range:**
Up to 115°C (239°F), Housing
290°C (554°F), Terminals
**Flammability Rating:**
UL94 V-O
**Color:** Light Gray

**Terminal Type:**
Screw / Rising Clamp
**Terminal Screw Size:**
M3.5
**Recommended Torque:**
0.8Nm
**Max. PCB's:**
(2) Vertical
**Mounting:**
35mm DIN Rail

### ORDERING INFORMATION

| Part Number | Type | Description | PCB Connection |
|---|---|---|---|
| 90.910 | KO4303 | Right Angle Pins | Machine Solder |

### ACCESSORIES

| Accessories | Part Number | Type |
|---|---|---|
| 1 Meter DIN Rail | 2511120/1M | TS35x7.5/1M |

### ENCLOSURE DRAWING (To convert to inches divide by 25.4.)

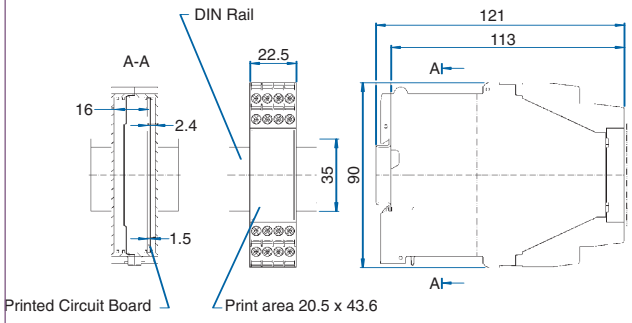


### PCB DRAWING (To convert to inches divide by 25.4.)

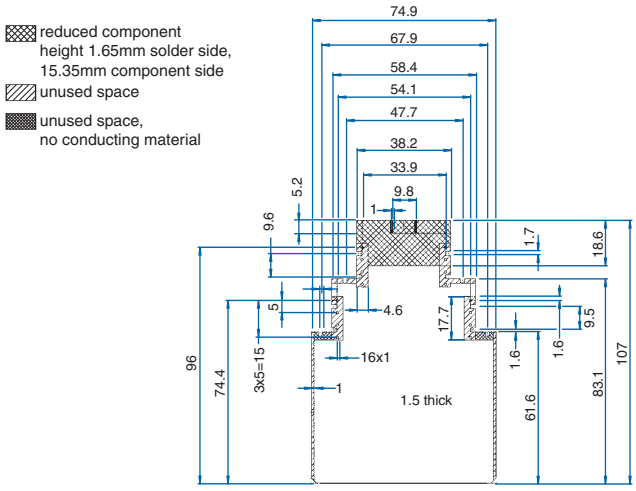

## 32 Terminal
### Vertical PCB

### TECHNICAL INFORMATION

**Electrical:**
16A, 300V, 22-12 AWG
**Housing Material:**
Glass-filled Polycarbonate
**Terminal Block Material:**
Glass-filled Polyamide
**Temperature Range:**
Up to 115°C (239°F), Housing
290°C (554°F), Terminals
**Flammability Rating:**
UL94 V-O
**Color:** Light Gray

**Terminal Type:**
Screw / Rising Clamp
**Terminal Screw Size:**
M3.5
**Recommended Torque:**
0.8Nm
**Max. PCB's:**
(4) Vertical
**Mounting:**
35mm DIN Rail

### ORDERING INFORMATION

| Part Number | Type | Description | PCB Connection |
|---|---|---|---|
| 90.920 | KO4324 | Right Angle Pins | Machine Solder |

### ACCESSORIES

| Accessories | Part Number | Type |
|---|---|---|
| 1 Meter DIN Rail | 2511120/1M | TS35x7.5/1M |

### ENCLOSURE DRAWING (To convert to inches divide by 25.4.)

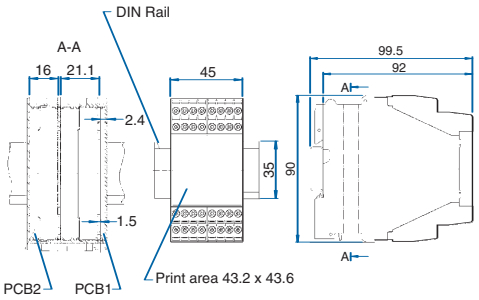


### PCB DRAWING (To convert to inches divide by 25.4.)

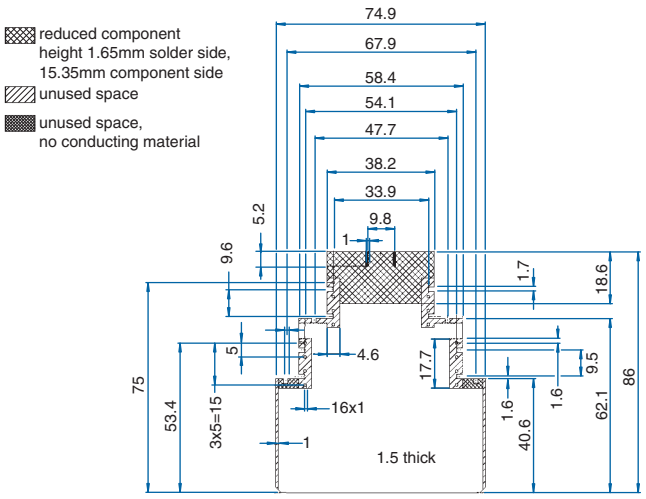


## 32 Terminal
### Tall Vertical PCB

### TECHNICAL INFORMATION

**Electrical:**
16A, 300V, 22-12 AWG
**Housing Material:**
Glass-filled Polycarbonate
**Terminal Block Material:**
Glass-filled Polyamide
**Temperature Range:**
Up to 115°C (239°F), Housing
290°C (554°F), Terminals
**Flammability Rating:**
UL94 V-O
**Color:** Light Gray

**Terminal Type:**
Screw / Rising Clamp
**Terminal Screw Size:**
M3.5
**Recommended Torque:**
0.8Nm
**Max. PCB's:**
(4) Vertical
**Mounting:**
35mm DIN Rail

### ORDERING INFORMATION

| Part Number | Type | Description | PCB Connection |
|---|---|---|---|
| 90.930 | KO4304 | Right Angle Pins | Machine Solder |

### ACCESSORIES

| Accessories | Part Number | Type |
|---|---|---|
| 1 Meter DIN Rail | 2511120/1M | TS35x7.5/1M |

### ENCLOSURE DRAWING (To convert to inches divide by 25.4.)

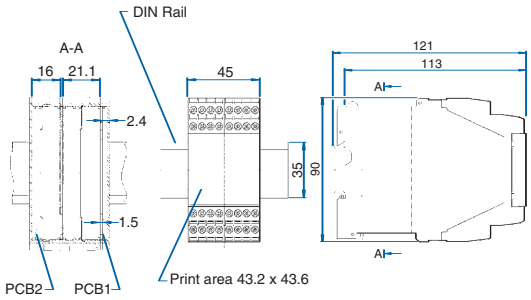


### PCB DRAWING (To convert to inches divide by 25.4.)

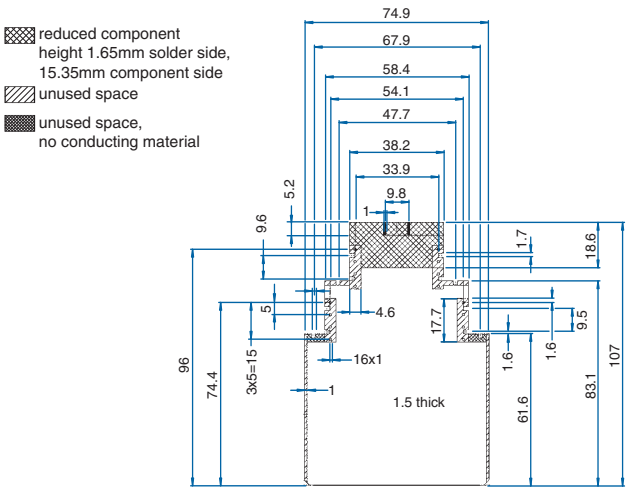

## 48 Terminal
### Vertical PCB

### TECHNICAL INFORMATION

**Electrical:**
16A, 300V, 22-12 AWG
**Housing Material:**
Glass-filled Polycarbonate
**Terminal Block Material:**
Glass-filled Polyamide
**Temperature Range:**
Up to 115°C (239°F), Housing
290°C (554°F), Terminals
**Flammability Rating:**
UL94 V-O
**Color:** Light Gray

**Terminal Type:**
Screw / Rising Clamp
**Terminal Screw Size:**
M3.5
**Recommended Torque:**
0.8Nm
**Max. PCB's:**
(6) Vertical
**Mounting:**
35mm DIN Rail

### ORDERING INFORMATION

| Part Number | Type | Description | PCB Connection |
|---|---|---|---|
| 90.940 | KO4325 | Right Angle Pins | Machine Solder |

### ACCESSORIES

| Accessories | Part Number | Type |
|---|---|---|
| 1 Meter DIN Rail | 2511120/1M | TS35x7.5/1M |

### ENCLOSURE DRAWING (To convert to inches divide by 25.4.)

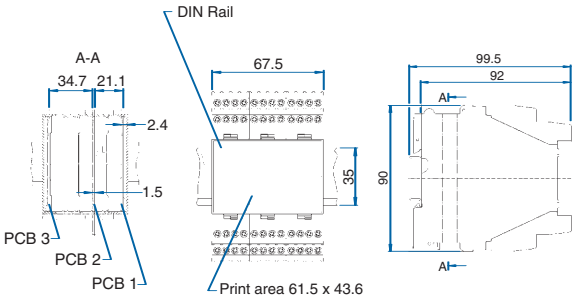


### PCB DRAWING (To convert to inches divide by 25.4.)

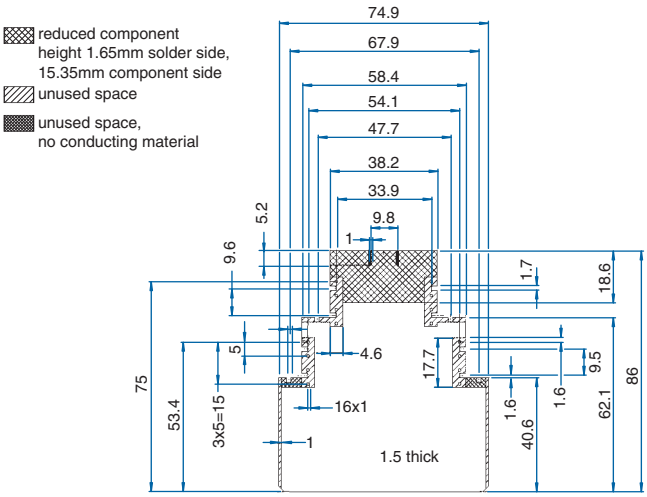


## 48 Terminal
### Tall Vertical PCB

### TECHNICAL INFORMATION

**Electrical:**
16A, 300V, 22-12 AWG
**Housing Material:**
Glass-filled Polycarbonate
**Terminal Block Material:**
Glass-filled Polyamide
**Temperature Range:**
Up to 115°C (239°F), Housing
290°C (554°F), Terminals
**Flammability Rating:**
UL94 V-O
**Color:** Light Gray

**Terminal Type:**
Screw / Rising Clamp
**Terminal Screw Size:**
M3.5
**Recommended Torque:**
0.8Nm
**Max. PCB's:**
(6) Vertical
**Mounting:**
35mm DIN Rail

### ORDERING INFORMATION

| Part Number | Type | Description | PCB Connection |
|---|---|---|---|
| 90.950 | KO4305 | Right Angle Pins | Machine Solder |

### ACCESSORIES

| Accessories | Part Number | Type |
|---|---|---|
| 1 Meter DIN Rail | 2511120/1M | TS35x7.5/1M |

### ENCLOSURE DRAWING (To convert to inches divide by 25.4.)

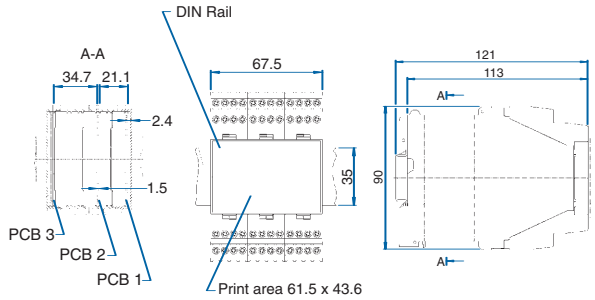


### PCB DRAWING (To convert to inches divide by 25.4.)

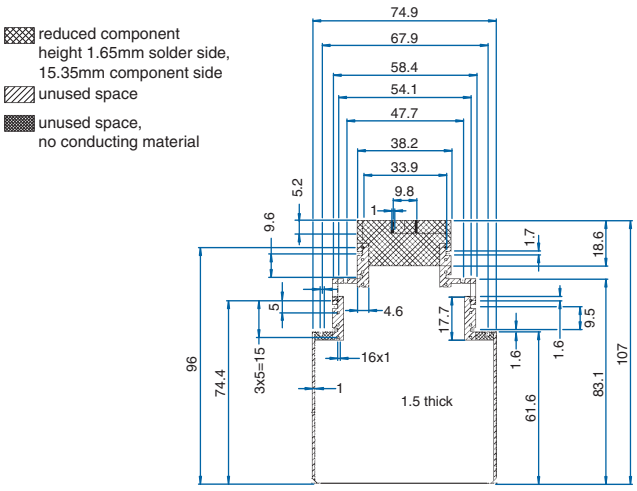

## 64 Terminal
### Vertical PCB

### TECHNICAL INFORMATION

**Electrical:**
16A, 300V, 22-12 AWG
**Housing Material:**
Glass-filled Polycarbonate
**Terminal Block Material:**
Glass-filled Polyamide
**Temperature Range:**
Up to 115°C (239°F), Housing
290°C (554°F), Terminals
**Flammability Rating:**
UL94 V-O
**Color:** Light Gray

**Terminal Type:**
Screw / Rising Clamp
**Terminal Screw Size:**
M3.5
**Recommended Torque:**
0.8Nm
**Max. PCB's:**
(8) Vertical
**Mounting:**
35mm DIN Rail

### ORDERING INFORMATION

| Part Number | Type | Description | PCB Connection |
|---|---|---|---|
| 90.960 | KO4326 | Right Angle Pins | Machine Solder |

### ACCESSORIES

| Accessories | Part Number | Type |
|---|---|---|
| 1 Meter DIN Rail | 2511120/1M | TS35x7.5/1M |

### ENCLOSURE DRAWING (To convert to inches divide by 25.4.)

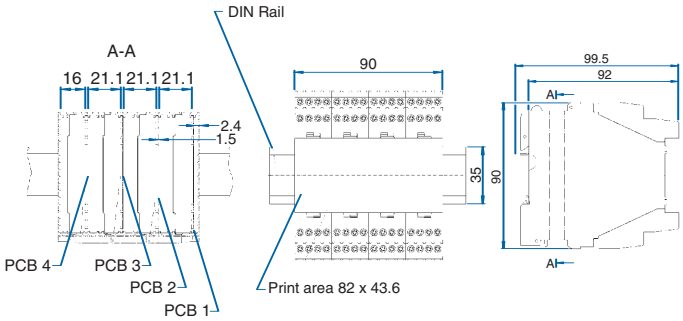


### PCB DRAWING (To convert to inches divide by 25.4.)

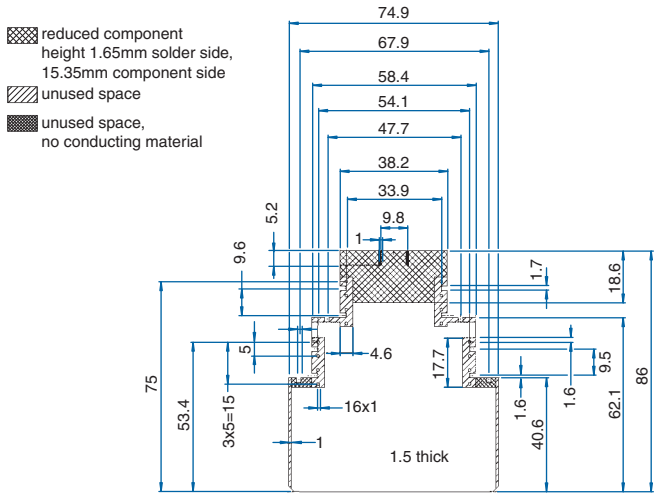


## 64 Terminal
### Tall Vertical PCB

### TECHNICAL INFORMATION

**Electrical:**
16A, 300V, 22-12 AWG
**Housing Material:**
Glass-filled Polycarbonate
**Terminal Block Material:**
Glass-filled Polyamide
**Temperature Range:**
Up to 115°C (239°F), Housing
290°C (554°F), Terminals
**Flammability Rating:**
UL94 V-O
**Color:** Light Gray

**Terminal Type:**
Screw / Rising Clamp
**Terminal Screw Size:**
M3.5
**Recommended Torque:**
0.8Nm
**Max. PCB's:**
(8) Vertical
**Mounting:**
35mm DIN Rail

### ORDERING INFORMATION

| Part Number | Type | Description | PCB Connection |
|---|---|---|---|
| 90.970 | KO4306 | Right Angle Pins | Machine Solder |

### ACCESSORIES

| Accessories | Part Number | Type |
|---|---|---|
| 1 Meter DIN Rail | 2511120/1M | TS35x7.5/1M |

### ENCLOSURE DRAWING (To convert to inches divide by 25.4.)

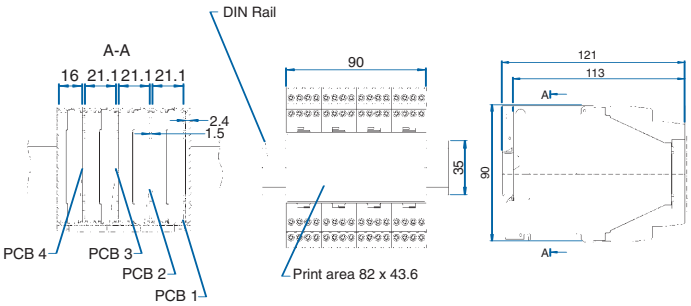


### PCB DRAWING (To convert to inches divide by 25.4.)

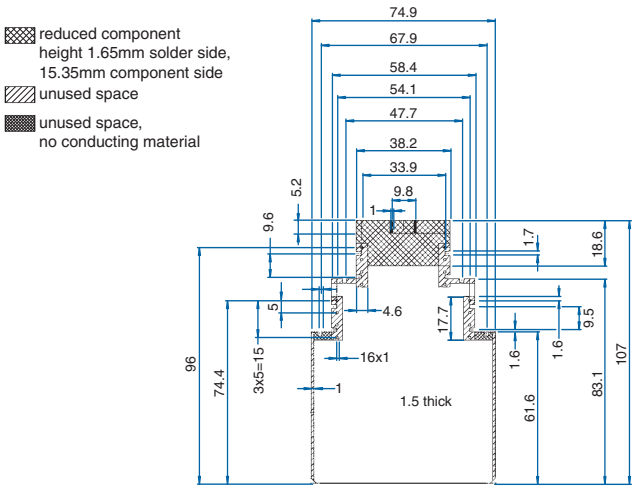

Общество с ограниченной ответственностью «МосЧип» ИНН 7719860671 / КПП 771901001
Адрес: 105318, г.Москва, ул.Щербаковская д.3, офис 1107

**Данный компонент на территории Российской Федерации**

**Вы можете приобрести в компании MosChip.**

Для оперативного оформления запроса Вам необходимо перейти по данной ссылке:

http://moschip.ru/get-element

Вы можете разместить у нас заказ для любого Вашего проекта, будь то серийное производство или разработка единичного прибора.

В нашем ассортименте представлены ведущие мировые производители активных и пассивных электронных компонентов.

Нашей специализацией является поставка электронной компонентной базы двойного назначения, продукции таких производителей как XILINX, Intel (ex.ALTERA), Vicor, Microchip, Texas Instruments, Analog Devices, Mini-Circuits, Amphenol, Glenair.

Сотрудничество с глобальными дистрибьюторами электронных компонентов, предоставляет возможность заказывать и получать с международных складов практически любой перечень компонентов в оптимальные для Вас сроки.

На всех этапах разработки и производства наши партнеры могут получить квалифицированную поддержку опытных инженеров.

Система менеджмента качества компании отвечает требованиям в соответствии с ГОСТ Р ИСО 9001, ГОСТ РВ 0015-002 и ЭС РД 009

**Офис по работе с юридическими лицами:**

105318, г.Москва, ул.Щербаковская д.3, офис 1107, 1118, ДЦ «Щербаковский»

Телефон: +7 495 668-12-70 (многоканальный)

Факс: +7 495 668-12-70 (доб.304)

E-mail: info@moschip.ru

Skype отдела продаж:
moschip.ru
moschip.ru_4
moschip.ru_6
moschip.ru_9