OMRON

Liquid Leakage Sensor Amplifiers

K7L-AT50/-AT50D

- Ultra-high sensitivity detects impedances of up to 50 MΩ.
- Polyethylene makes the Sensing Band more resistant to chemicals.
- Series includes models with disconnection detection.

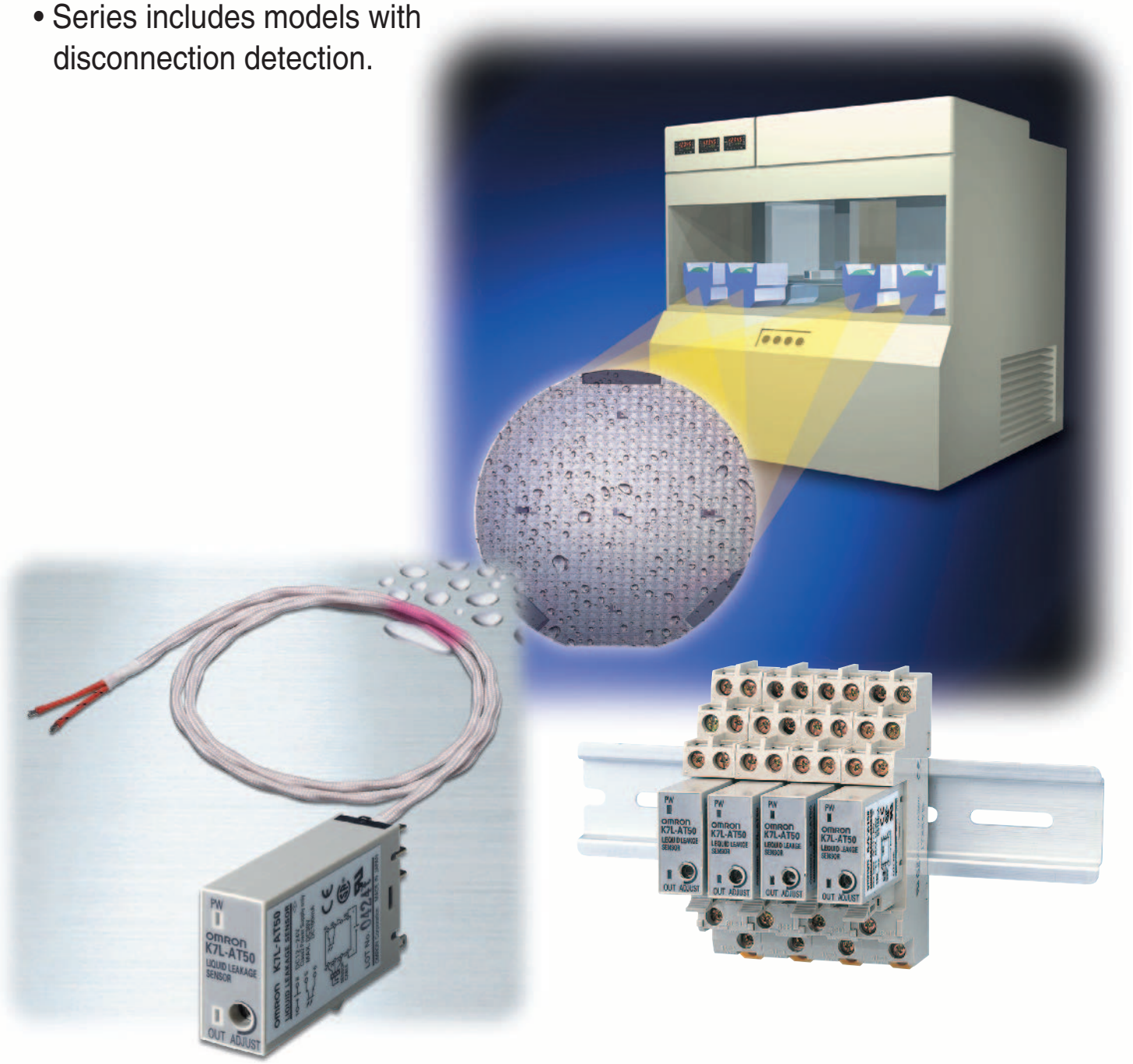

*The color of the Sensing Band shown here is a conceptualization and is not necessarily the actual color.

Features

Sensing Bands boast high degree of chemical resistance. The K7L can be used in a wide range of applications, from semiconductor production installations to food-processing equipment.

Inter-electrode Resistance Detection

Stable detection of liquids with impedances of up to 50 MΩ and common water. Four sensing ranges are available, ensuring detection suited to the application.

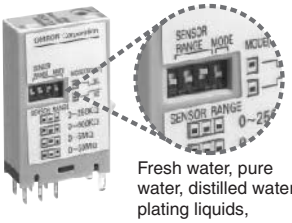

Fresh water, pure water, distilled water, plating liquids, chemical liquids, IPA (isopropyl alcohol)

AC Detection Method

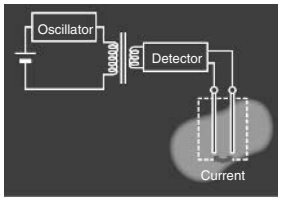

The K7L internally oscillates AC signals provided to the Sensing Band, protecting the Sensing Band from electric corrosion and ensuring safe operation.

Noise Canceller Function (Patent Pending)

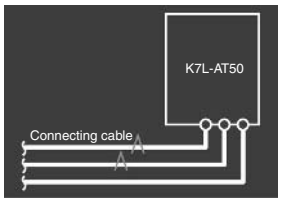

The K7L incorporates a noise canceller circuit that uses a 3-conductor cable, ensuring a high level of noise immunity.

Multiple Installation

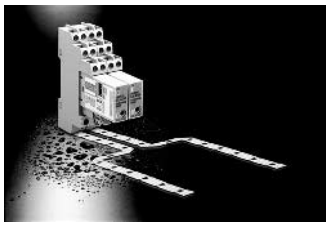

The power supply circuit and the detection circuit are isolated, allowing several Amplifiers to be installed in the same place.

Sensing Band with Excellent Chemical Resistance

SUS316 and polyethylene are used for the Sensing Band's core and sheath to ensure high resistance to both acidic and alkaline liquids.

■ Application Examples

Liquid Leakage Detection for Measuring Baths in CMP Devices

Liquid leaked to drain pans can be detected to prevent damage to devices and cleaning irregularities for wafers.

Detection of Condensation and Liquid Leakage at Semiconductor Production Installations

Detection is also possible for condensation inside cleaning devices and liquid leaked to the surroundings.

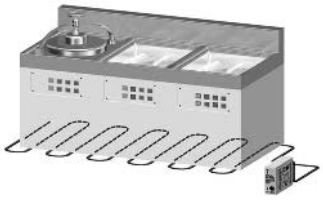

Detection of Liquid Leakage at Pipe Joints for Liquid Chemical Tanks

Liquid leakage at a pipe joint can be detected by wrapping the Sensing Band around the joint.

Detection of Cleaning Fluid Level for Plating Devices

The level of pure water is detected inside plating baths. High sensitivity allows high-accuracy control to prevent cleaning irregularities.

Note: Be sure to ground the baths if two or more K7L Sensors are used in the same tank in an explosion-prevention area.

Liquid Leakage Sensor Amplifier
K7L-AT50

Ultra-miniature Sensor Amplifier Reliably Detects a Wide Variety of Liquids Ranging from Water to Liquid Chemicals with Low Conductivity.

- Detects liquids with impedance as high as 50 MΩ using inter-electrode resistance detection. Detection of IPA and pure water is possible.
- Four selectable sensing ranges ensure detection suited to the characteristics of the liquid.
- Incorporates a noise canceller circuit connected to a 3-conductor cable, ensuring a high level of noise immunity and reliable operation (patent pending).
- The power supply block and Sensing Band are isolated, allowing the installation of more than one device in the same place.

Ordering Information

Product name		Model	Characteristics
Liquid Leakage Sensor Amplifier		K7L-AT50	---
Sensors	**Sensing Band**	F03-16PE	Standard model
		F03-15	Greater durability and condensation resistance. (See note 1.)
		F03-16PT	Greater temperature and chemical resistance. (See note 1.)
		F03-16SF	Greater flexibility and superior workability. (See note 1.)
		F03-16SFC	Greater flexibility and enables visual confirmation when the inner color appears.
	Point Sensor	F03-16PS	Easier to wipe off than the band type.
		F03-16PS-F	Electrodes have fluororplastic coating to resist chemicals.
Mounting Brackets and Stickers	**Sensing Band Stickers**	F03-25	Used for F03-15 or F03-16SF(C).
		F03-26PES	Used for F03-16PE (adhesive tape).
		F03-26PEN	Used for F03-16PE (screws).
		F03-26PTN	Used for F03-16PT (screws).
	Point Sensor Mounting Brackets	F03-26PS	Used for F03-16PS.
Terminal Blocks		F03-20	---
Track-mounted Socket		P2RF-08-E	---
		P2RF-08	---

Note: 1. Compared with the standard model, F03-16PE.
2. One F03-20 Terminal Block is included as an accessory with the K7L-AT50.
3. The minimum order for the F03-25, F03-26PES, or F03-26PEN Sensing Band Stickers is one set (contains 30 Stickers).
4. The minimum order for F03-20 Terminal Blocks, F03-26PTN Sensing Band Stickers, or F03-26PS Point Sensor Mounting Brackets is one set (contains 10 Terminal Blocks, Stickers, or Mounting Brackets).

■ Available Sensing Band Lengths

	1 m	2 m	5 m	10 m	15 m	20 m	25 m	30 m	40 m	50 m	60 m	70 m	75 m	80 m	90 m	100 m
F03-16PE	OK	OK	OK	OK	OK	OK	OK			OK						
F03-15	OK	OK	OK	OK	OK	OK	OK			OK			OK			OK
F03-16PT	OK	OK	OK	OK	OK	OK										
F03-16SF(C)			OK	OK	OK	OK		OK	OK	OK	OK	OK		OK	OK	OK

Note: 1. To place an order for 1 m of the F03-16PE for example, specify F03-16PE-1M.
2. If you cannot find the length you need, please order the nearest larger length, then cut it to the required size.

Specifications

■ Ratings

Rated power supply voltage	12 to 24 VDC (Allowable voltage fluctuation range: 10 to 30 VDC)
Operate resistance	0 Ω to 50 MΩ, variable Range 0: 0 to 250 kΩ Range 1: 0 to 600 kΩ Range 2: 0 to 5 MΩ Range 3: 0 to 50 MΩ **Note:** The range is set using the DIP switch on the side of the Sensor Amplifier. (Refer to *DIP Switch Settings*.) Set the corresponding pin of the DIP switch in the up position. (For range 0, set all 3 pins in the down position.) The adjuster (ADJUST) on the top of the Sensor Amplifier sets the resistance value for detection within the set range. It is factory-set to the upper limit. (Normally, the K7L can be used with the adjuster at this setting.) With any range, resistance values can be set from 0 Ω.
Release resistance	105% min. of operate resistance
Output configuration	NPN open-collector transistor output with 100 mA at 30 VDC max. **Note:** If the rightmost pin of the DIP switch on the side of the Sensor Amplifier is set to the down position, the output turns ON when liquid is detected; if it is set to the up position, the output turns OFF when liquid is detected.
Wiring distance	Connecting cable: 50 m max. Sensing Band length: 10 m max. **Note:** These values are possible on condition that a completely insulated 3-conductor VCT cable with a thickness of 0.75 mm^2 and a dielectric strength of 600 V is used together with a Liquid Sensing Band specified by OMRON. (A 0.2-mm^2 cable can also be used.)
Accessories	F03-20 Terminal Block (for connecting the connecting cable and Sensing Band) Screwdriver for ADJUST setting. (Purchase the Sensing Band, Sensing Band Stickers, connecting cable, and Socket separately.)

Note: UL File No. E138234
CSA File No. LR95291-21
CE EMS: EN 61000-6-2
EMI: EN 55011

■ Characteristics

Ambient temperature	Operating: –10 to 55°C
Ambient humidity	Operating: 45% to 85%
Insulation resistance	10 MΩ at 100 VDC between case and current-carrying parts
Dielectric strength	1,000 VAC at 50/60 Hz for 1 min between case and current-carrying parts
Power consumption	1 W max.
Response time	Operate: 800 ms max. Release: 800 ms max.
Weight	Approx. 14 g

Nomenclature

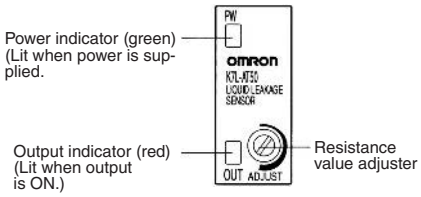

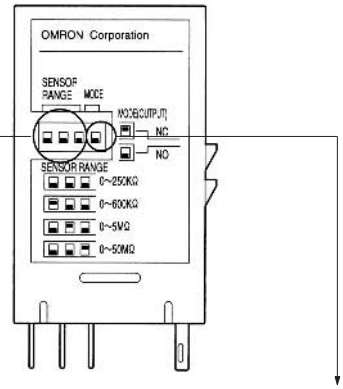

■ DIP Switch Settings

Setting Sensing Range

DIP switch	Range number	Sensing range
	Range 0	0 to 250 kΩ
	Range 1	0 to 600 kΩ
	Range 2	0 to 5 MΩ
	Range 3	0 to 50 MΩ

DIP switch	Output mode
	Output OFF when liquid leakage detected.
	Output ON when liquid leakage detected.

- Set the sensing range according to the impedance of the liquid to be detected. (If the sensing range DIP switch pins are set in a way not shown above, the actual range used will be the largest one by default.) For the setting method, refer to the label on the side of the Sensor Amplifier.
- It is possible to set the resistance value within the set sensing range using the resistance value adjuster. At time of delivery, it is set to the largest possible value and this setting can be used for normal use.
- The resistance value adjuster is a precision component. Do not apply a torque to the resistance value adjuster in excess of the specified one. Doing so may cause the resistance value adjuster to be damaged.
  Applicable torque:
  - Rotational torque: 9.81 m N·m max.
  - Detent strength: 29.4 m N·m min.

Operation

■ Countermeasures Against Noise

Noise Canceller Function for Highly Sensitive Impedance Detection

The K7L Liquid Leakage Sensor Amplifier detects liquids with impedance as high as 50 MΩ and connects to the Sensing Band through a cable that can be extended up to 50 meters. Countermeasures against external noise are especially important for the Sensing Band and connecting cable because they pick up external noise like an antenna. The K7L incorporates the noise canceller function described below.

Connected with 3-conductor Cable that Offsets Inductive Noise (Patent Pending)

A VCT cable with three conductors (lines) is used. Line 1 is connected to the Sensing Band and line 2 is left open. Lines 1 and 2 are almost in the same position and thus will experience the same noise level. The K7L obtains the difference between these signals. This means that the noise signals in lines 1 and 2 are offset against each other and a reading for the signal, without inductive noise, can be made.

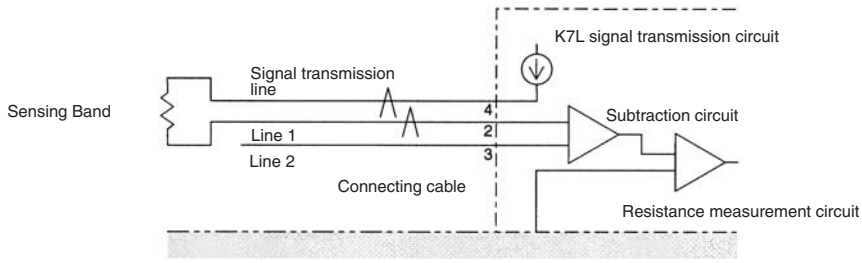

■ Connections

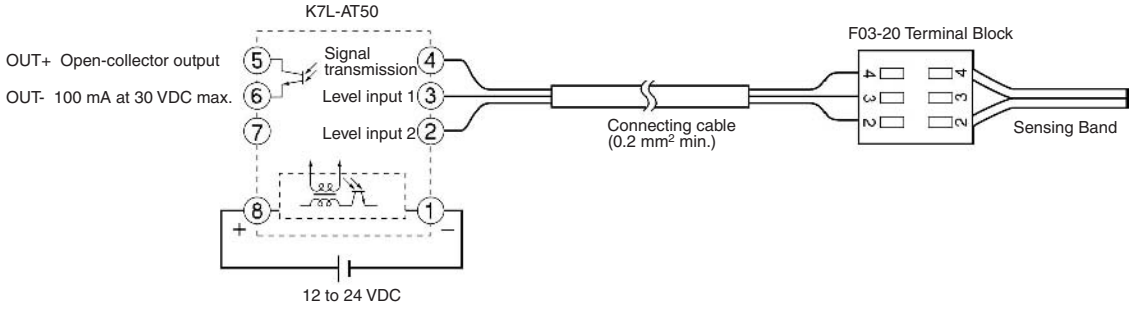

■ Connection Examples

NPN Output

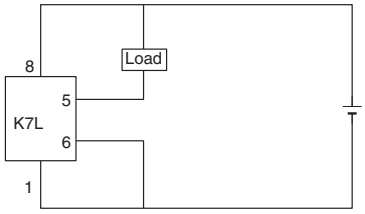

PNP Output

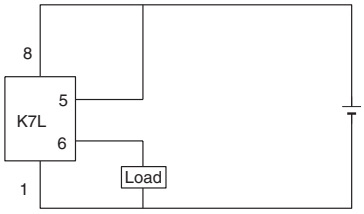

OMRON

Liquid Leakage Sensor Amplifier with Disconnection Detection Function K7L-AT50D/-AT50D-S

Detect Disconnections between the Sensor Amplifier and a Terminator Connected to the End of the Sensing Band.

- Constantly monitors for disconnections between the Sensor Amplifier and the Sensing Band.
- Failure to detect liquid leakage due to disconnection in the Sensing Band prevented.
- Notification of disconnection detection made using LED indicator and transistor output.
- After a disconnection is detected, the operating status is held to avoid instability due to further contact of the disconnected part.
- This model retains all the characteristics of the K7L-AT50 (detection sensitivity, sensing ranges, and AC detection method).
- Meets UL/CSA standards. (See information on standards on page 7.)

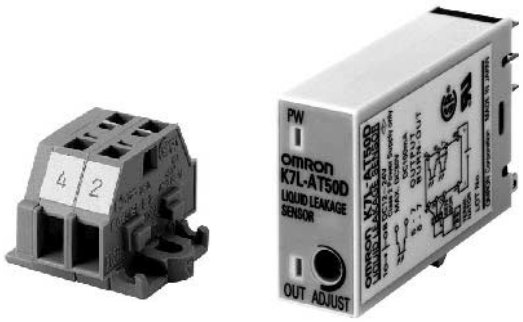

Ordering Information

Name	Model number
Liquid Leakage Sensor Amplifier with Disconnection Detection Function Set	K7L-AT50D
Liquid Leakage Sensor Amplifier with Disconnection Detection Function Sensor Amplifier Only	K7L-AT50D-S
Terminator (2P)	F03-20T

Note: The Sockets, Terminal Blocks, Stickers, and Sensing Bands are the same as for the K7L-AT50.

Specifications

■ Ratings

Rated power supply voltage	12 to 24 VDC (Allowable voltage fluctuation range: 10 to 30 VDC)
Operate resistance	0 Ω to 50 MΩ, variable Range 0: 0 to 250 kΩ Range 1: 0 to 600 kΩ Range 2: 0 to 5 MΩ Range 3: 0 to 50 MΩ **Note:** The range is set using the DIP switch on the side of the Sensor Amplifier. (Refer to *DIP Switch Settings*.) Set the corresponding pin of the DIP switch in the up position. (For range 0, set all 3 pins in the down position.) The adjuster (ADJUST) on the top of the Sensor Amplifier sets the resistance value for detection within the set range. It is factory-set to the upper limit. (Normally, use with the adjuster set to the upper limit.) With any range, resistance values can be set from 0 Ω.
Disconnection detection function	Detection signal: 10 VDC max., 200 ms Detection time: 10 s max. Release: Released by resetting the power supply.
Release resistance	105% min. of operate resistance
Output configuration	NPN open-collector transistor output with 100 mA at 30 VDC max. for both liquid leakage detection and disconnection detection. **Note:** If the rightmost pin of the DIP switch on the side of the Sensor Amplifier is set to the down position, the output turns ON when liquid/disconnection is detected; if it is set to the up position, the output turns OFF when liquid/disconnection is detected.
Wiring distance	Connecting cable: 50 m max. Sensing Band length: 10 m max. **Note:** These values are possible on condition that a completely insulated 3-conductor VCT cable with a thickness of 0.75 mm^2 and a dielectric strength of 600 V is used together with a Liquid Sensing Band specified by OMRON. (A 0.2-mm^2 cable can also be used.)
Accessories	F03-20 Terminal Block (for connecting the connecting cable and Sensing Band) Screwdriver for ADJUST setting. F03-20T Terminator (provided with K7L-AT50D only) (Purchase the Sensing Band, Sensing Band Stickers, connecting cable, and Socket separately. The Terminal Block is 3P; the Terminator is 2P.)

Note: UL File No. E138234
CSA File No. LR95291-21

■ Characteristics

The characteristics are the same as for the K7L-AT50. Refer to page 4 for details.

Nomenclature

The nomenclature and DIP switch settings are the same as for the K7L-AT50. Refer to page 5 for details.

Operation

■ Disconnection Detection Function

Operation While Monitoring for Liquid Leakage

- Short-wave signals (2.5 VAC, 3.75 Hz) for liquid leakage detection are output from terminal 4 of the K7L.
- When there is no liquid leakage, the liquid leakage detection signals that are output are interrupted by the Terminator and the core of the Sensing Band will form an open loop.

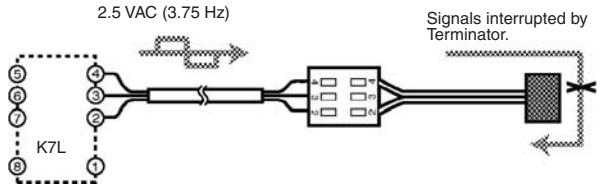

Operation at Liquid Leakage Detection

- When liquid leakage occurs within the sensing range, the liquid leakage detection signals output from terminal 4 are input to terminal 2 through the leaked liquid.
- The voltage of the input signals will vary with the resistance of the leaked liquid. This voltage is compared with the detection level set at the K7L.
- As a result of the comparison, if the K7L determines that liquid leakage has occurred, the K7L's output LED will light, and the liquid detection output will either turn ON or OFF.

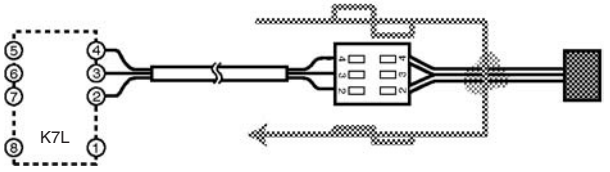

Operation While Monitoring for Disconnection

- Output of disconnection detection signals starts within 2 s of power being supplied to the K7L and is repeated at 7-s intervals.
- Disconnection signals are DC signals of 10 V max. that are output for approximately 200 ms. During this time, the K7L is in disconnection monitoring mode, i.e. it monitors for disconnections only and the liquid leakage detection signals are stopped.
- If there is no disconnection, the disconnection detection signals (10 VDC) that are output pass through the Terminator and return to the K7L. The K7L takes this as normal, i.e., there is no disconnection.

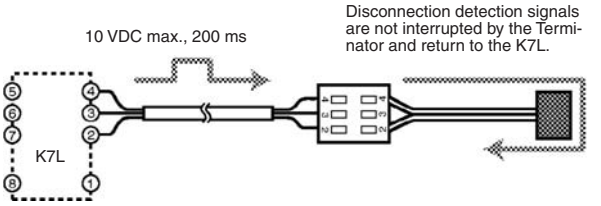

Operation at Disconnection Detection

- If there is a disconnection, the signals will be interrupted at the place where the disconnection occurred, and will not return to the K7L.
- If the signals do not return when the K7L is in disconnection monitoring mode, it will determine that a disconnection has occurred. The output indicator will flash, and the disconnection output will turn ON/OFF depending on the position of the DIP switch (right).

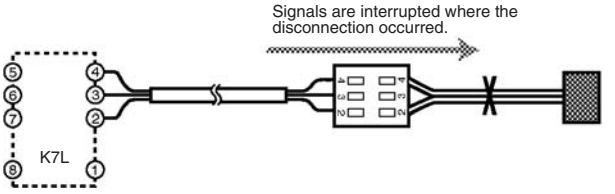

Note: 1. Disconnection detection is only performed between terminals 2 and 4. Therefore, be sure to connect the Sensing Band between terminals 2 and 4.

2. The K7L will switch from liquid leakage detection to disconnection detection if either of the following conditions occur while liquid leakage is detected.

- Disconnection occurs between the K7L and the place where liquid is leaked.
- While liquid leakage is detected, disconnection occurs between the place where liquid is leaked and the Terminator (F03-20T) and, subsequently, the leaked liquid is removed (e.g., wiped up or dried).

3. During disconnection detection, liquid leakage will not be detected. Once disconnection has been detected, reset the power supply to stop disconnection detection.

■ Block Diagram for External Connections

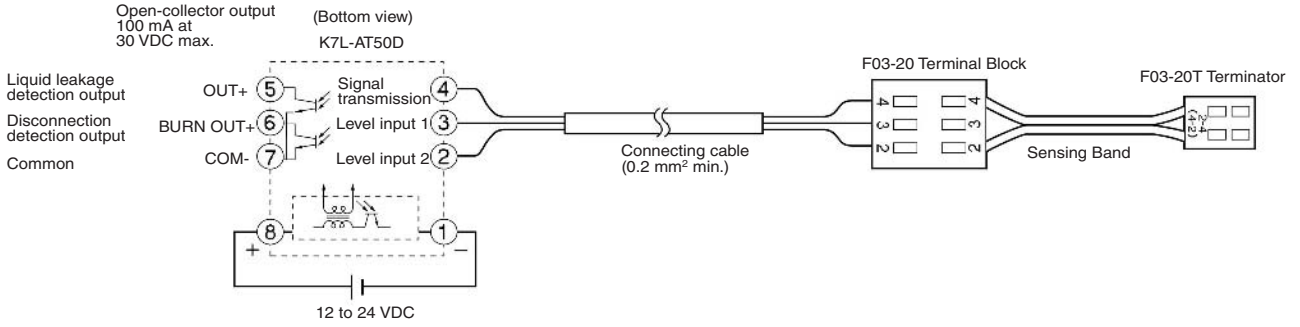

Sensing Band
F03-16PE

- SUS316 used for core and polyethylene used for sheath to ensure high resistance to both acidic and alkaline liquids.
- Sensing Band Stickers that use the same material as the Sensing Band's insulating resin are available in 2 types: adhesive-tape type and screw type.

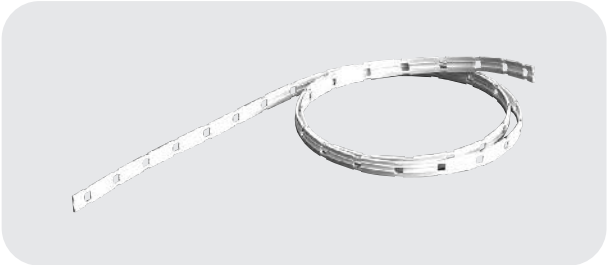

Ordering Information

Name	Model number	Remarks
Liquid Leakage Sensing Band	**F03-16PE**	---
Sensing Band Stickers	**F03-26PES** **F03-26PEN**	30 Stickers per set 30 Stickers per set

Specifications

Sheath	Polyethylene
Core	SUS316 stainless steel
Ambient operating temperature	–15 to 55°C
Weight	Approx. 16 g (1 m)

Dimensions (Unit: mm)

■ Sensing Band

Appearance	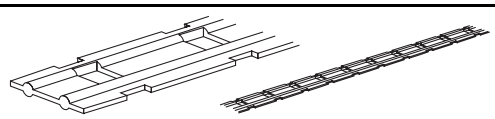
Structure	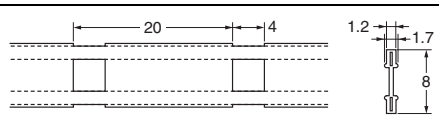 Materials: Electrodes: SUS316 stainless steel, Sheath: Polyethylene

■ Sensing Band Stickers

	F03-26PEN (screws)	F03-26PES (adhesive tape)
Appearance		
Structure	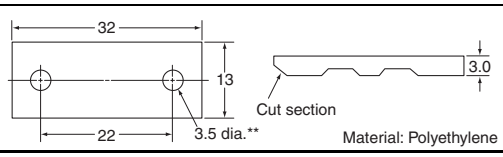	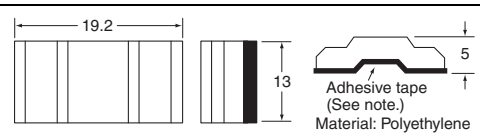

Note: The shape of the adhesive tape shown above is for securing the F03-16PE.

Sensing Band
F03-16PT

- Compared to the F03-16PE (polyethylene), the F03-16PT has higher resistance to both high temperatures and chemicals.
- Small holes enable the detection of leakage even when installed upside down.

Ordering Information

Name	Model number	Remarks
Fluoroplastic Sensing Band	**F03-16PT**	---
Fluoroplastic Sensing Band Stickers	**F03-26PTN**	10 Stickers per set

Specifications

Sheath	PTFE fluoroplastic
Core	SUS316 stainless steel
Ambient operating temperature	–50 to 200°C
Weight	Approx. 16 g (1 m)

Dimensions (Unit: mm)

■ Sensing Band

Appearance	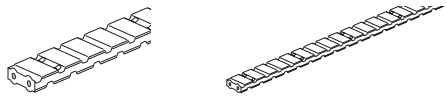
Structure	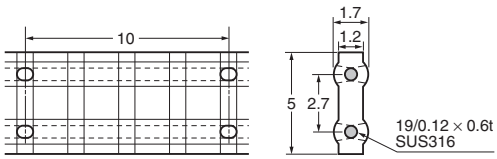 Materials: Electrodes: SUS316 stainless steel, Sheath: Fluoroplastic

■ Sensing Band Stickers

	F03-26PTN (screws)
Appearance	
Structure	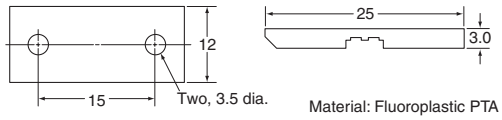 Material: Fluoroplastic PTA

Note: The shape of the adhesive tape shown above is for securing the F03-16PE.

Sensing Band
F03-15

- Ideal for harsh electrical room environments that are dusty and humid.
- For installation in locations requiring insulated materials.

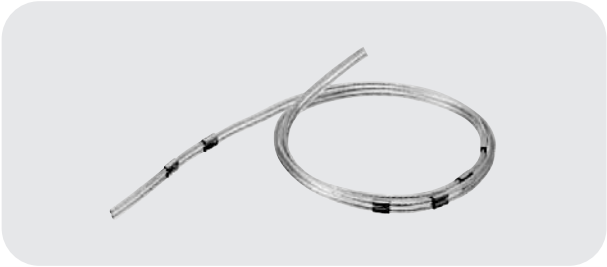

Ordering Information

Name	Model number	Remarks
Liquid Leakage Sensing Band	**F03-15**	---
Sensing Band Stickers	**F03-25**	30 Stickers per bag

Specifications

Sheath	Flexible, transparent vinyl chloride
Core	SUS304 stainless steel
Ambient operating temperature	–15 to 50°C
Weight	Approx. 48 g (1 m)

Dimensions (Unit: mm)

■ Sensing Band

Appearance	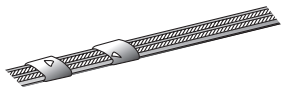
Structure	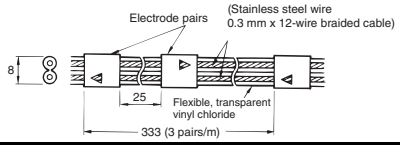

■ Sensing Band Stickers

	F03-25
Appearance	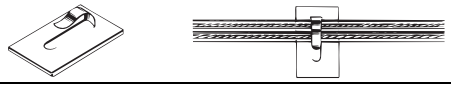
Structure	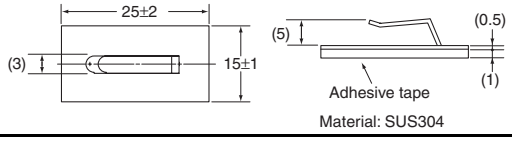

Sensing Band
F03-16SF

- Greater flexibility and superior workability compared with the F03-16PE.
- The sheath becomes transparent to reveal the red inner sheath if liquid leakage occurs, thereby enabling visual confirmation. After drying, the Sensing Band color will return to white (F03-16SFC only).

Ordering Information

Name	Model number	Remarks
Sensing Band	**F03-16SF**	Without color indication
	F03-16SFC	With color indication
Stickers	**F03-25**	30 Stickers per bag

Specifications

Sheath	Special plastic fiber braided cable with water-absorbent and water-repellent characteristics
Core	Tin-plated, copper stranded wire
Ambient operating temperature	–15 to 60°C
Fire retardancy	Not fire retardant
Weight	Approx. 20 g (1 m)

Length of Cable

■ Length of Cable (For reference only. Performance values may differ.)

(1) Connection with K7L-AT50 or K7L-AT50D (IV Cable + Sensing Band)

Sensing Band / Wiring Cable Note	0 m	10 m	50 m	100 m	150 m
0 m	❍ Range 3	❍ Range 3	❍ Range 2	❍ Range 2	❍ Range 1
10 m	❍ Range 3	❍ Range 3	❍ Range 2	❍ Range 2	❍ Range 1
50 m	❍ Range 3	❍ Range 3	❍ Range 2	❍ Range 2	❍ Range 1
100 m	❍ Range 3	❍ Range 3	❍ Range 2	❍ Range 2	❍ Range 1
150 m	❍ Range 3	❍ Range 3	❍ Range 2	❍ Range 2	❍ Range 1
200 m	❍ Range 3	❍ Range 3	❍ Range 2	❍ Range 2	❍ Range 1

❍···Set value that can be used.

Note: These values are possible provided that a completely insulated 3-conductor VCT cable with a thickness of 0.75mm^2 and a dielectric strength of 600 V is used.

(2) Connection with 61F-GPN-V50 or 61F-WLA (IV Cable + Sensing Band)

Sensing Band / Wiring Cable Note	0 m	10 m	50 m	100 m	150 m	200 m
0 m	❍	❍	❍	❍	❍	❍
10 m	❍	❍	❍	❍	❍	
50 m	❍	❍	❍	❍	❍	
100 m	❍	❍	❍			
150 m	❍					

❍···Can be used.

Note: These values are possible provided that a completely insulated 3-conductor VCT cable with a thickness of 0.75mm^2 and a dielectric strength of 600 V is used.

Dimensions (Unit: mm)

	F03-16SF	F03-16SFC
Appearance	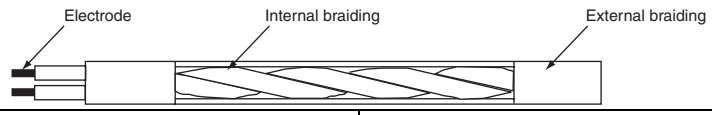	
Structure	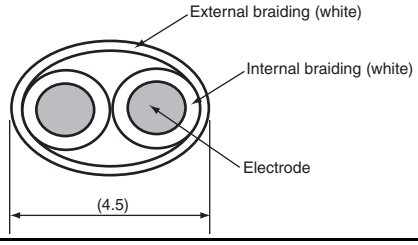	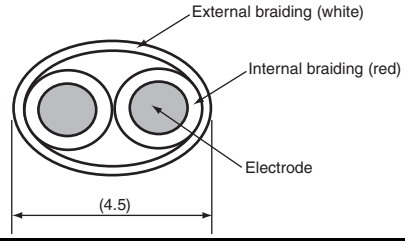

	F03-25
Appearance	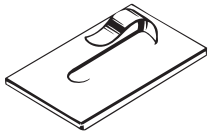
Structure	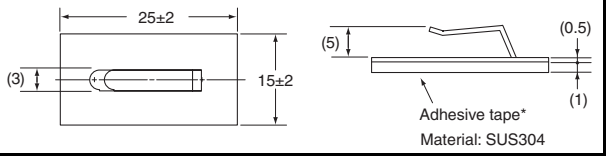

Chemical Resistivity for F03-16PE/-16PT

Material	Sheath		Core	Material	Sheath		Core
	Polyethylene	Fluoroplastic	SUS316		Polyethylene	Fluoroplastic	SUS316
Water	A	A	A	Toluene	C	B	B
Acetone	C	A	A	Phenol	B	B	A
Ammonia	A	A	A	Butanol	B	A	---
Ethanol	B	A	A	Fluorine	A	A	C
Hydrochloric acid	A	A	C	Hexane	C	A	---
Hydrogen peroxide solution	A	A	A	Benzene	C	A	A
Xylene	B	A	A	Methanol	B	A	A
Cyclohexane	C	A	---	Sulfuric acid	C	A	B
Trichloroethylene	C	A	A	Phosphoric acid	A	B	B

Note: 1. A: Not affected at all or only very slightly affected.
B: Slightly affected but, depending on the conditions, sufficient for use.
C: Affected but may still be used. (Replace the Sensing Band immediately after detection.)

2. In order to prevent secondary fire damage, consider the effect of the atmosphere of the environment and the solution to be detected on the Sensing Band.

3. If the Sensing Band changes shape or color when a liquid is detected, replace the Sensing Band.

■ Connecting the Sensing Band

Bending the Sensing Band

To change the direction of the Sensing Band, bend the Sensing Band in one or two places where the core is not exposed.

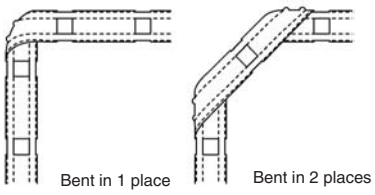

Note: Bend the Sensing Band approximately 4 cm (i.e., twice the distance between places where the core is exposed) away from places where a Sticker is attached. If the Sensing Band is bent at places further away than this, the Sensing Band may come away from the surface.

Stripping and Connecting Terminals

1. Cut into the Sensing Band approximately 4 to 6 cm in from the end as shown in the diagram below.
2. Strip away approximately the last 9 mm of the sheath to expose the core (SUS line).
3. To connect to the Terminal Block, push down the top of the terminal with a screwdriver and insert the core from the side. (Refer to *Dimensions* on page 9.) More Sensing Bands can be connected simply by wiring in an arch shape.

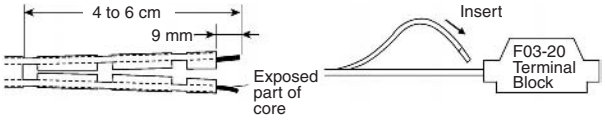

Note: Check that the wiring is secure before using the K7L in applications.

Interval Between Stickers

When securing the Sensing Band with Stickers, attach the Stickers at intervals of 20 to 30 cm in places where the core is not exposed.

Note: 1. When using the F03-26PES (adhesive-tape model), be sure to wipe all moisture, oil, and dust from the surface to which the Sticker is to be attached. Failure to do so may result in insufficient adhesion, and the Sticker may peel away from the surface.

2. When using the F03-26PEN (screw model), before installing the Sensing Band, it is necessary to perform stud welding. For details on the pitch of the studs, refer to the information on the dimensions of Sensing Band Stickers.

Liquid Leakage Sensing Band Precautions

Refer to the following installation methods and install the Sensing Band securely using the proper method for the location and environment.

1. Post or Beam Mounting
   Use fasteners, such as concrete anchors, to secure the Sensing Band every 500 to 1,000 mm to ensure that it does not come loose. If the surface of the post or beam is very uneven, apply two-sided tape to the mounting surface first and then secure the Sensing Band to the tape with the fastener.
2. Conduit Installation
   For vertical conduits, wrap the Sensing Band around the conduit at a pitch 2 to 3 times the diameter of the conduit. For horizontal conduits, secure the Sensing Band at appropriate intervals along the bottom of the conduit using an insulated adhesive strap, such as Insulock, to ensure that the Sensing Band does not come loose.
3. Dike and Catch Basin installation
   Use the specified stickers (sold separately) to secure the Sensing Band at appropriate intervals to keep it flat in the dike or catch basin.
4. Floor Installation
   Estimate the leakage detection area and use stickers to secure the Sensing Band at appropriate intervals on the floor and around equipment. Cover the Sensing Band with plastic or metal molding to protect it from contact with other objects and from being stepped on by workers. Leave a 50- to 100-mm gap in the molding at approximately 500-mm intervals where it touches the floor to allow liquids to pass through.
5. Do not install the Sensing Band in locations where condensation is likely to occur.
6. Mount the Sensing Band as close as possible to the mounting surface. Make sure that any gaps are no more than 2 mm in horizontal installations, such as the floor, and no more than 1 mm with vertical installations, such as posts and beams.
7. Attach an insulated protector, such as plastic molding, securely to the Sensing Band to protect it from contact with power cables carrying over 300 V.
8. Normally leaking materials detected by the Sensing Band will evaporate and the Sensing Band will return to its original state. The Sensing Band may not return to its original state and will have to be replaced, however, if the leaking material contained conductive impurities. Follow the appropriate replacement procedures.
9. The Sensing Band is not designed to be used as electrical wiring and must not be used for any purpose other than leak detection.
10. Do not apply petroleum-based products, such as wax, to the Sensing Band. Otherwise, liquids may be repelled and detection may fail.

FAQs

Some questions that are frequently asked about the K7L are given below. Use this information when selecting a model.

Can one K7L Amplifier be used for detection in more than one place?

Yes.

By using Terminal Blocks to connect Sensing Bands in parallel, detection can be performed in more than place with only one K7L Amplifier.

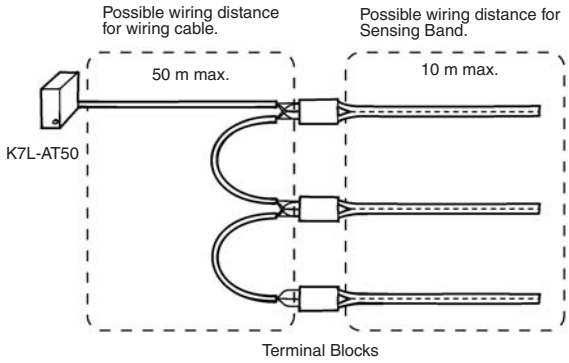

Note: 1. When wiring, be sure not to exceed the maximum possible wiring distances for both the connecting cable and the Sensing Band. Exceeding these distances may lead to faulty operation. Connect one Sensing Band to each Terminal Block.

2. Not applicable to K7L-AT50D.

Can the K7L Amplifier be used as a replacement for the 61F-GPN-V50 Water Leakage Detector?

Yes.

Because the surge withstand capability is different, however, do not use in locations where it will be exposed to impulses and surges, such as outdoor roofs or in pump panels. Also, items such as the power supply voltage and the connection sockets are different. Check these items before application.

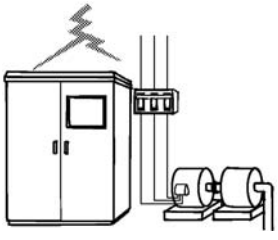

Can a different terminal block (e.g. a commercially available terminal block or a terminal block constructed by the user) be used instead of the one provided?

Yes.

When using another terminal block, however, be sure to check that all the terminals are mutually isolated, and that there is no danger of ground faults in connecting cables or Sensing Bands.

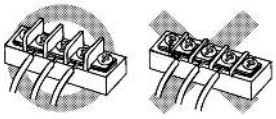

Can the K7L Amplifier detect pure water?

Yes.

Even pure water, which has a resistance exceeding 10 MΩ·cm, can nearly always be detected if the K7L is used at its maximum sensitivity. This is because impurities are mixed with the water when it is leaked and the resistance drops.

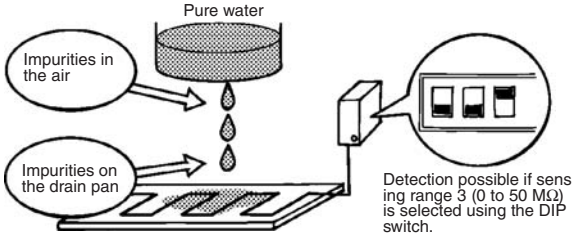

Can the K7L Amplifier detect oil?

In most cases, no.

If, however, it contains impurities such as metal powder, as is the case with cutting oil and used engine oil, detection may be possible (actual instances of detection have been observed). The user should confirm whether the required kind of detection is possible before application.

Liquid Leakage Point Sensor
F03-16PS

A New Liquid Leakage Point Sensor Has Been Added to the K7L Series. Fluoroplastic Coating on the Bottom Electrode Ensures Chemical Resistance.

- Can be used in conjunction with Sensing Bands.
- Stud screw mounting requires no tools for installation.
- No tools means the Sensor can be wiped clean quickly and easily.
- The optional Mounting Bracket enables faster installation than three-screw mounting.
- Connect multiple Sensors to one K7L-AT50 Amplifier for significant cost savings.

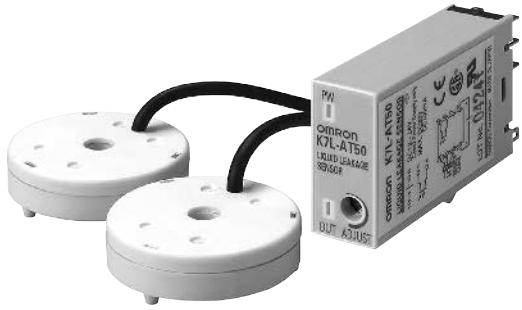

Ordering Information

Sensors

Product name	Main material	Cable material	Electrode material	Model
Liquid Leakage Point Sensor	Polyethylene	Outer sheath: PVC Inner sheath: Fluoroplastic	SUS304	F03-16PS
			SUS304 and fluoroplastic coating	F03-16PS-F
Mounting Brackets (See note 1.)		---	---	F03-26PS
Terminal Block (See note 2.)	Nylon 6.6	---	---	F03-20

Note: **1.** Use a commercially available bonding agent for PVC. One bag contains 10 Brackets.
2. One bag contains 10 Blocks.

Amplifier

Product name	Model
Liquid Leakage Sensor Amplifier	K7L-AT50

Specifications

Ambient temperature	–10 to 60°C
Nut tightening torque	0.3 N·m max.
Weight	Approx. 30 g
Max. No. connected per Amplifier	Any number up to an overall cable length of 60 m.

Wiring Diagram

Any number of Sensors can be connected in parallel up to an overall cable length of 60 m. Leakage areas cannot be specified with the K7L-AT50.

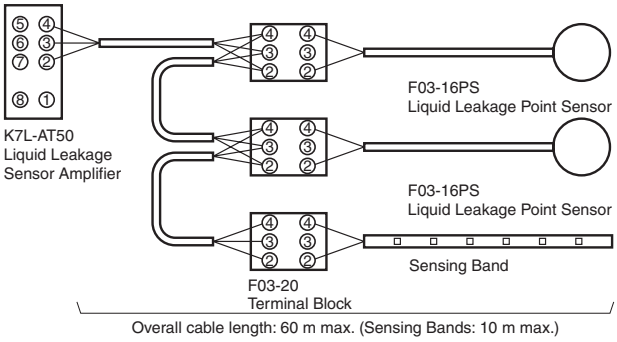

Mounting Methods

Stud Screw Mounting

Securing the Sensor with a Nut

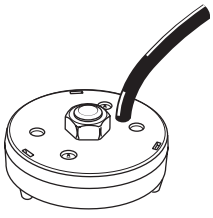

Securing the Sensor with a Wing Nut

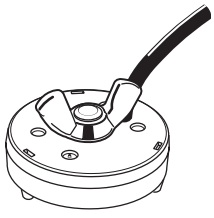

Special Bracket Mounting

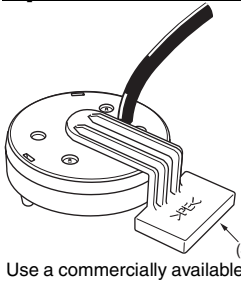

Note: Use a commercially available bonding agent for PVC.

Dimensions (Unit: mm)

Liquid Leakage Sensor Amplifier

K7L-AT50/-AT50D

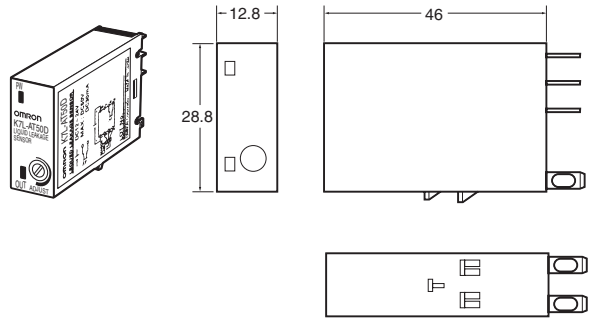

Terminal Block (See note 1.)

F03-20

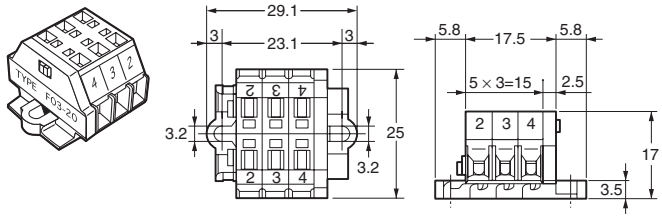

Terminator (See note 1.)

F03-20

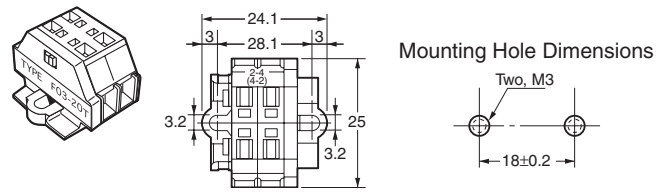

Track-mounted Sockets (See note 2.)

P2RF-08 (Round terminals can be used.)

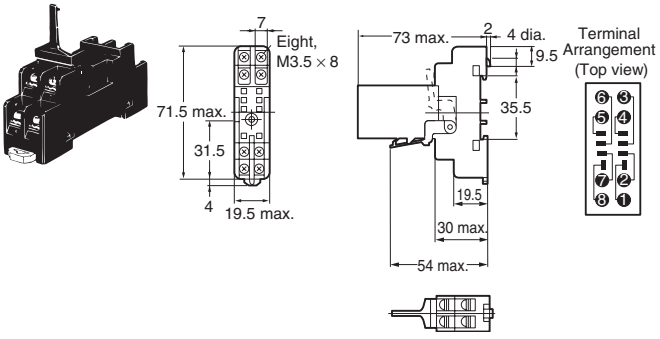

Track-mounted Sockets (See note 2.)

P2RF-08-E

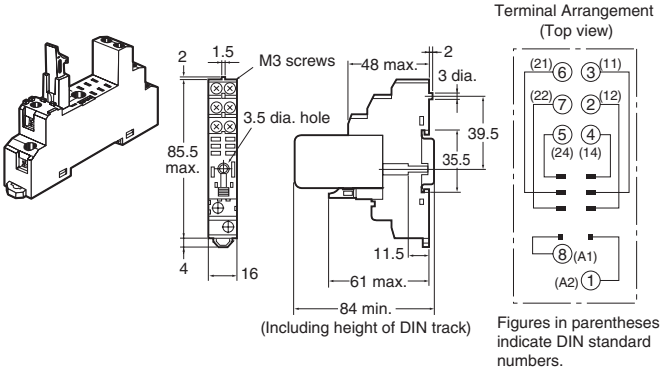

Liquid Leakage Point Sensor

F03-16PS
F03-16PS-F

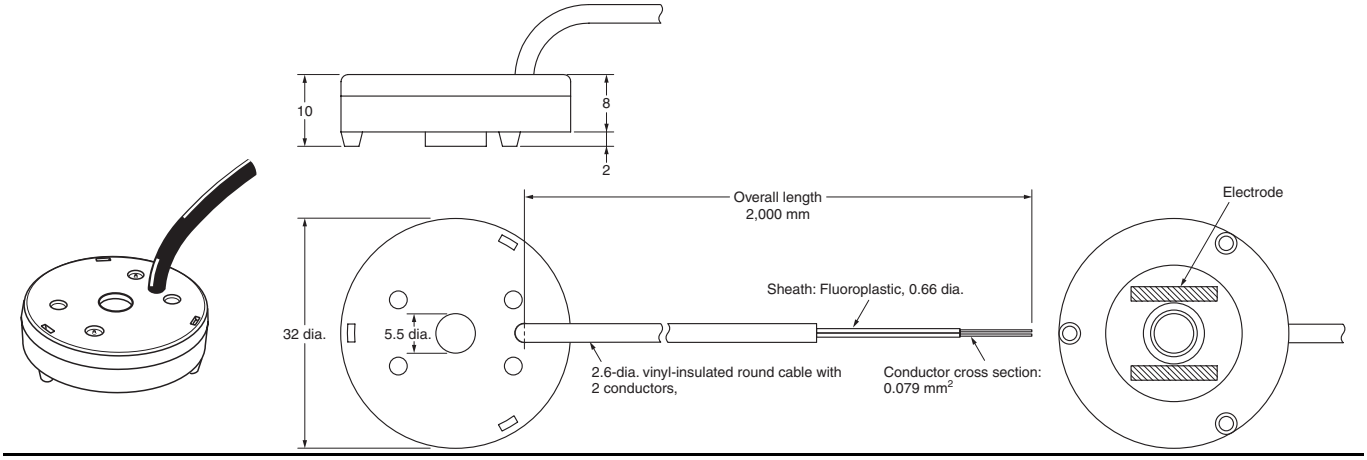

Note: 1. The Terminal Block is made of nylon 66. Mount the Terminal Block in locations not subject to liquid chemicals using M3 screws.
2. Secure the Sockets with M3 screws at a torque of 0.78 to 1.18 N·m.

Point Sensor Mounting Bracket

F03-26PS

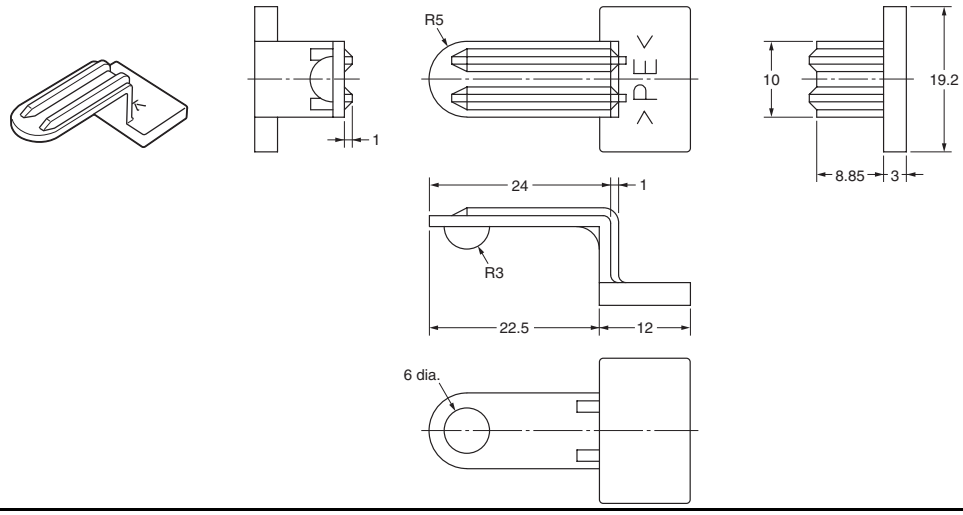

Safety Precautions

■ Precautions for Safe Use

Observe the following points to ensure safe operation.

- Be sure to use a power supply voltage within the specified range. Not doing so may result in burning or malfunction.
- Do not use the product in locations subject to flammable gases or combustible objects. Doing so may result in fire.
- Insert the connection points into Sockets until the connection is locked securely. Not doing so may result in burning or malfunction.
- Do not short-circuit loads connected to output terminals. Doing so may result in burning.
- Be sure to connect the power supply with the correct polarity. Not doing so may result in malfunction.

■ Precautions for Correct Use

Installation

Attach to a panel of thickness 1 to 5 mm.

Do not install in the following locations.

- Locations subject to shock or vibration
- Locations where the temperature or humidity lies outside the specified range, or where condensation is likely to occur (To detect liquids with high impedances, do not use in locations with high humidity.)
- Locations subject to dust
- Locations subject to corrosive gases (particularly sulfide and ammonia gases)
- Outdoors or locations subject to direct sunlight
- Near devices that generate strong high-frequency noise (e.g., high-frequency welding devices etc.)

■ Application Precautions

You must allow sufficient leeway in ratings and performance, and provide proper fail-safe or other safety measures when using these products in any of the following applications. Be sure also to consult with your OMRON representative before actually attempting any of these applications.

- Applications under conditions or environments not specified in user documentation
- Applications for nuclear control systems, railroad systems, aviation systems, vehicles, combustion systems, medical equipment, amusement machines, or safety equipment
- Applications that may have a serious influence on lives and property and thus require particularly attention to safety

OMRON

Warranty and Application Considerations

Read and Understand this Catalog

Please read and understand this catalog before purchasing the products. Please consult your OMRON representative if you have any questions or comments.

Warranty and Limitations of Liability

WARRANTY

OMRON's exclusive warranty is that the products are free from defects in materials and workmanship for a period of one year (or other period if specified) from date of sale by OMRON.

OMRON MAKES NO WARRANTY OR REPRESENTATION, EXPRESS OR IMPLIED, REGARDING NON-INFRINGEMENT, MERCHANTABILITY, OR FITNESS FOR PARTICULAR PURPOSE OF THE PRODUCTS. ANY BUYER OR USER ACKNOWLEDGES THAT THE BUYER OR USER ALONE HAS DETERMINED THAT THE PRODUCTS WILL SUITABLY MEET THE REQUIREMENTS OF THEIR INTENDED USE. OMRON DISCLAIMS ALL OTHER WARRANTIES, EXPRESS OR IMPLIED.

LIMITATIONS OF LIABILITY

OMRON SHALL NOT BE RESPONSIBLE FOR SPECIAL, INDIRECT, OR CONSEQUENTIAL DAMAGES, LOSS OF PROFITS, OR COMMERCIAL LOSS IN ANY WAY CONNECTED WITH THE PRODUCTS, WHETHER SUCH CLAIM IS BASED ON CONTRACT, WARRANTY, NEGLIGENCE, OR STRICT LIABILITY.

In no event shall the responsibility of OMRON for any act exceed the individual price of the product on which liability is asserted.

IN NO EVENT SHALL OMRON BE RESPONSIBLE FOR WARRANTY, REPAIR, OR OTHER CLAIMS REGARDING THE PRODUCTS UNLESS OMRON'S ANALYSIS CONFIRMS THAT THE PRODUCTS WERE PROPERLY HANDLED, STORED, INSTALLED, AND MAINTAINED AND NOT SUBJECT TO CONTAMINATION, ABUSE, MISUSE, OR INAPPROPRIATE MODIFICATION OR REPAIR.

Application Considerations

SUITABILITY FOR USE

OMRON shall not be responsible for conformity with any standards, codes, or regulations that apply to the combination of products in the customer's application or use of the products.

Take all necessary steps to determine the suitability of the product for the systems, machines, and equipment with which it will be used.

Know and observe all prohibitions of use applicable to this product.

NEVER USE THE PRODUCTS FOR AN APPLICATION INVOLVING SERIOUS RISK TO LIFE OR PROPERTY WITHOUT ENSURING THAT THE SYSTEM AS A WHOLE HAS BEEN DESIGNED TO ADDRESS THE RISKS, AND THAT THE OMRON PRODUCTS ARE PROPERLY RATED AND INSTALLED FOR THE INTENDED USE WITHIN THE OVERALL EQUIPMENT OR SYSTEM.

Disclaimers

PERFORMANCE DATA

Performance data given in this catalog is provided as a guide for the user in determining suitability and does not constitute a warranty. It may represent the result of OMRON's test conditions, and the users must correlate it to actual application requirements. Actual performance is subject to the OMRON *Warranty and Limitations of Liability.*

CHANGE IN SPECIFICATIONS

Product specifications and accessories may be changed at any time based on improvements and other reasons. Consult with your OMRON representative at any time to confirm actual specifications of purchased product.

DIMENSIONS AND WEIGHTS

Dimensions and weights are nominal and are not to be used for manufacturing purposes, even when tolerances are shown.

ALL DIMENSIONS SHOWN ARE IN MILLIMETERS.
To convert millimeters into inches, multiply by 0.03937. To convert grams into ounces, multiply by 0.03527.

Cat. No. F049-E1-07 **In the interest of product improvement, specifications are subject to change without notice.**

OMRON Corporation
Industrial Automation Company
Control Devices Division H.Q.
Industrial Components Department
Shiokoji Horikawa, Shimogyo-ku,
Kyoto, 600-8530 Japan
Tel: (81)75-344-7119/Fax: (81)75-344-7149

Regional Headquarters

OMRON EUROPE B.V.
Wegalaan 67-69, NL-2132 JD Hoofddorp
The Netherlands
Tel: (31)2356-81-300/Fax: (31)2356-81-388

OMRON ELECTRONICS LLC
1 East Commerce Drive, Schaumburg, IL 60173
U.S.A.
Tel: (1)847-843-7900/Fax: (1)847-843-8568

OMRON ASIA PACIFIC PTE. LTD.
83 Clemenceau Avenue,
#11-01, UE Square,
239920 Singapore
Tel: (65)6835-3011/Fax: (65)6835-2711

OMRON (CHINA) CO., LTD.
Room 2211, Bank of China Tower,
200 Yin Cheng Road (M)
Shanghai, 200120 China
Tel: (86)21-5037-2222/Fax: (86)21-5037-2200

Printed in Japan
0605-0.3M (0305) (B)

Cat. No. F049-E1-07

2007.3

OMRON Corporation
Industrial Automation Company

http://www.ia.omron.com/

In the interest of product improvement, specifications are subject to change without notice.

(c)Copyright OMRON Corporation 2007 All Rights Reserved.

Mouser Electronics

Authorized Distributor

Click to View Pricing, Inventory, Delivery & Lifecycle Information:

Omron:

F03-15-2M F03-16PT-5M F03-16PT-10M F03-16PT-15M F03-16PE-2M F03-16SFC-40M F03-16SF-5M F03-16PT-1M F03-15-25M F03-16SFC-60M F03-16PE-25M F03-16SF-100M F03-16SF-30M F03-15-10M F03-16SF-90M F03-16SF-60M F03-15-15M F03-16SF-10M F03-16SF-40M F03-16SFC-80M F03-16PE-5M F03-16SF-15M F03-16SF-70M F03-15-1M F03-16SFC-5M F03-16PS-F F03-16SFC-10M F03-16PE-50M F03-16SF-20M F03-16SFC-20M F03-15-20M F03-16SFC-30M F03-16SF-50M F03-15-5M F03-16SF-80M F03-16SFC-50M F03-16SFC-70M F03-16SFC-15M F03-16SFC-100M F03-16SFC-90M

Общество с ограниченной ответственностью «МосЧип» ИНН 7719860671 / КПП 771901001
Адрес: 105318, г.Москва, ул.Щербаковская д.3, офис 1107

Данный компонент на территории Российской Федерации

Вы можете приобрести в компании MosChip.

Для оперативного оформления запроса Вам необходимо перейти по данной ссылке:

http://moschip.ru/get-element

Вы можете разместить у нас заказ для любого Вашего проекта, будь то серийное производство или разработка единичного прибора.

В нашем ассортименте представлены ведущие мировые производители активных и пассивных электронных компонентов.

Нашей специализацией является поставка электронной компонентной базы двойного назначения, продукции таких производителей как XILINX, Intel (ex.ALTERA), Vicor, Microchip, Texas Instruments, Analog Devices, Mini-Circuits, Amphenol, Glenair.

Сотрудничество с глобальными дистрибьюторами электронных компонентов, предоставляет возможность заказывать и получать с международных складов практически любой перечень компонентов в оптимальные для Вас сроки.

На всех этапах разработки и производства наши партнеры могут получить квалифицированную поддержку опытных инженеров.

Система менеджмента качества компании отвечает требованиям в соответствии с ГОСТ Р ИСО 9001, ГОСТ РВ 0015-002 и ЭС РД 009

Офис по работе с юридическими лицами:

105318, г.Москва, ул.Щербаковская д.3, офис 1107, 1118, ДЦ «Щербаковский»

Телефон: +7 495 668-12-70 (многоканальный)

Факс: +7 495 668-12-70 (доб.304)

E-mail: info@moschip.ru

Skype отдела продаж:
moschip.ru
moschip.ru_4
moschip.ru_6
moschip.ru_9