July. 2014

FPF1C2P5BF07A
F1 Module solution for PV-Application

General Description

Fairchild's brand-new DC-DC module is designed for a power stage that needs more compact design. And the Press-fit technology provides simple and reliable mounting. This module is optimized for the application such as solar inverter where a high efficiency and robust design are needed.

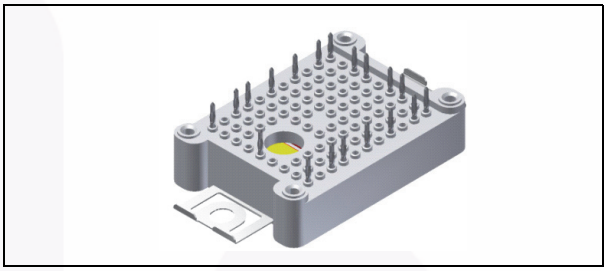

Package Code: F1

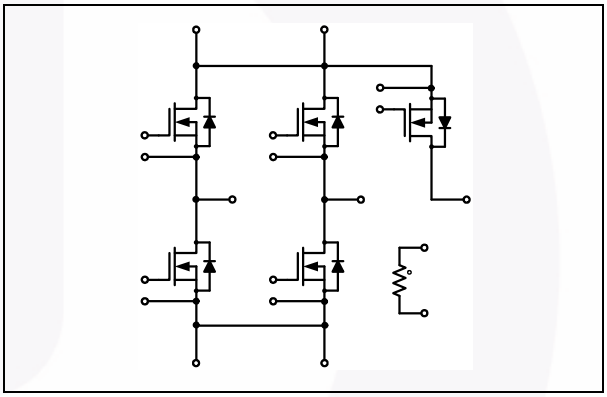

Internal Circuit Diagram

Electrical Features

- High Efficiency
- Low Conduction and Switching losses
- Low $R_{DS(ON)}$: 90 mΩ max.
- Fast Recovery Body Diode
- Built-in NTC for temperature monitoring

Mechanical Features

- Compact size : F1 Package
- Press-fit contact technology

Applications

- Solar Inverter

Certification

- UL approved (E209204)

Absolute Maximum Ratings T_C = 25°C unless otherwise noted.

Symbol	Description		Rating	Units
V_{DSS}	Drain-Source Voltage		650	V
V_{GSS}	Gate-Source Voltage		± 20	V
I_D	Continuous Drain Current	@ T_C = 25°C	36	A
		@ T_C = 80°C	27	A
I_{DM}	Pulsed Drain Current	Limited by T_J max.	156	A
I_S	Continuous Source-Drain Forward Current		36	A
I_{SM}	Maximum Pulsed Source-Drain Forward Current		156	A
P_D	Maximum Power Dissipation	@ T_C = 25°C	250	W
T_J	Operating Junction Temperature		-40 to +150	°C

©2014 Fairchild Semiconductor Corporation

Absolute Maximum Ratings T_C = 25°C unless otherwise noted. (Continued)

Symbol	Description		Rating	Units
Module				
T_{STG}	Storage Temperature		-40 to +125	°C
V_{ISO}	Isolation Voltage	@ AC 1_{MIN}	2500	V
Iso._Material	Internal Isolation Material		Al_2O_3	
F_{MOUNT}	Mounting Force per Clamp		20 to 50	N
Weight		Typ.	22	g
Creepage	Terminal to Heatshink		11.5	mm
	Terminal to Terminal		6.3	mm
Clearance	Terminal to Heatshink		10.0	mm
	Terminal to Terminal		5.0	mm

Package Marking and Ordering Information

Device	Device Marking	Package	Packing Type	Quantity / Tray
FPF1C2P5BF07A	FPF1C2P5BF07A	F1	Tray	22

Electrical Characteristics T_C = 25°C unless otherwise noted.

Symbol	Parameter	Conditions	Min.	Typ.	Max.	Units
Off Characteristics						
BV_{DSS}	Drain-Source Breakdown Voltage	V_{GS} = 0 V, I_D = 1 mA	650	-	-	V
I_{DSS}	Zero Gate Voltage Drain Current	V_{DS} = 650 V, V_{GS}= 0 V	-	-	25	μA
I_{GSS}	Gate-Body Leakage Current, Forward	V_{GS} = 20 V, V_{DS}= 0 V	-	-	2.5	μA
On Characteristics						
$V_{GS(th)}$	Gate-Source Threshold Voltage	V_{GS} = V_{DS}, I_D= 250 μA	-	3.8	-	V
$R_{DS(ON)}$	Static Drain-Source On-Resistance	I_D = 27 A, V_{GS} = 10 V	-	-	90	mΩ
		I_D = 27 A, V_{GS} = 10 V @T_C = 125°C	-	135	-	mΩ
		I_D = 47 A, V_{GS} = 10 V	-	76	-	mΩ
Switching Characteristics						
$t_{d(on)}$	Turn-On Delay Time	V_{CC} = 380 V I_D = 27A V_{GS} = 10 V $R_{G(ON)}$ = 51 Ω $R_{G(OFF)}$ = 3 Ω Inductive Load T_C = 25 °C	-	192	-	ns
t_r	Rise Time		-	75	-	ns
$t_{d(off)}$	Turn-Off Delay Time		-	140	-	ns
t_f	Fall Time		-	13	-	ns
E_{ON}	Turn-On Switching Loss per Pulse		-	2.29	-	mJ
E_{OFF}	Turn-Off Switching Loss per Pulse		-	58	-	μJ
$t_{d(on)}$	Turn-On Delay Time	V_{CC} = 380 V I_D = 27 A V_{GS} = 10 V $R_{G(ON)}$ = 51 Ω $R_{G(OFF)}$ = 3 Ω Inductive Load T_C = 125 °C	-	159	-	ns
t_r	Rise Time		-	82	-	ns
$t_{d(off)}$	Turn-Off Delay Time		-	156	-	ns
t_f	Fall Time		-	13	-	ns
E_{ON}	Turn-On Switching Loss per Pulse		-	4.06	-	mJ
E_{OFF}	Turn-Off Switching Loss per Pulse		-	65	-	μJ
$Q_{g(total)}$	Total Gate Charge	V_{DS} = 380 V, V_{GS} = 0V...+10 V, I_D = 27 A	-	155	-	nC
$R_{\theta}JC$	Thermal Resistance of Junction to Case	per Chip	-	-	0.5	°C/W
Switching Characteristics : Body Diode						
V_{SD}	Source-Drain Diode Forward Voltage	I_{SD} = 27 A, V_{GS} = 0 V	-	-	1.5	V
		I_{SD} = 47 A, V_{GS} = 0 V	-	1.3	-	V
t_{rr}	Reverse Recovery Time	I_{SD} = 27 A dI_F/dt = 364 A/μs	-	109		ns
I_{rr}	Reverse Recovery Current		-	39	-	A
Q_{rr}	Reverse Recovery Charge		-	2000	-	nC
t_{rr}	Reverse Recovery Time	I_{SD} = 27A dI_F/dt = 320 A/μs @T_C = 125°C	-	179		ns
I_{rr}	Reverse Recovery Current		-	55	-	A
Q_{rr}	Reverse Recovery Charge		-	4802	-	nC
NTC						
R_{NTC}	Rated Resistance	T_C = 25°C	-	10	-	kΩ
		T_C = 100°C	-	936	-	Ω
	Tolerance	T_C = 25°C	-3	-	+3	%
P_D	Power Dissipation	T_C = 25°C	-	-	20	mW
B_{Value}	B-Constance	$B_{25/50}$	-	3450	-	K
		$B_{25/100}$	-	3513	-	K

Typical Performance Characteristic

Fig 1. On-Region Characteristics

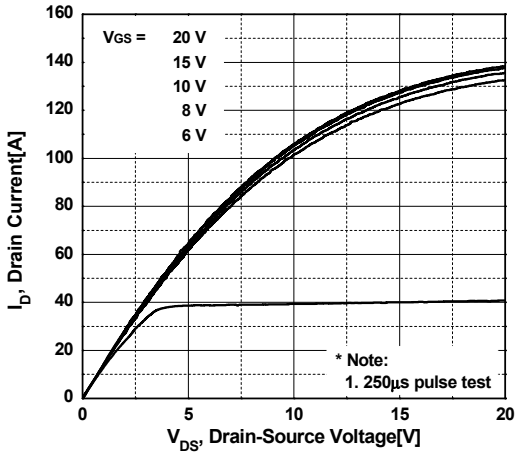

Fig 2. On-Resistance Variation vs. Drain Current and Gate Voltage

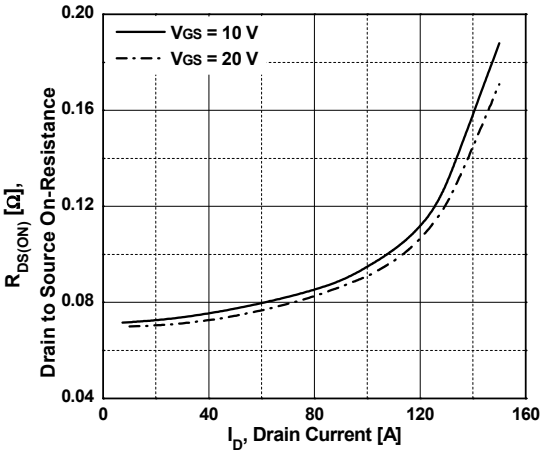

Fig 3. On-Resistance Variation vs. Temperature

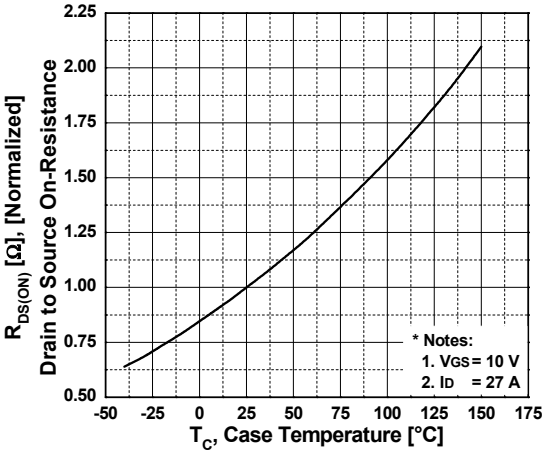

Fig 4. Body Diode Forward Voltage Variation vs. Source Current and Temperature

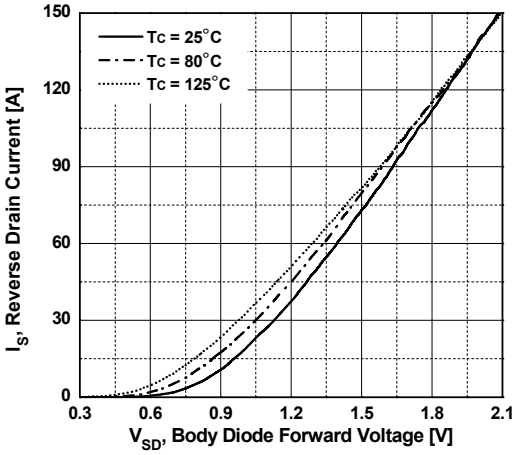

Fig 5. Turn-Off Loss vs. Drain Current

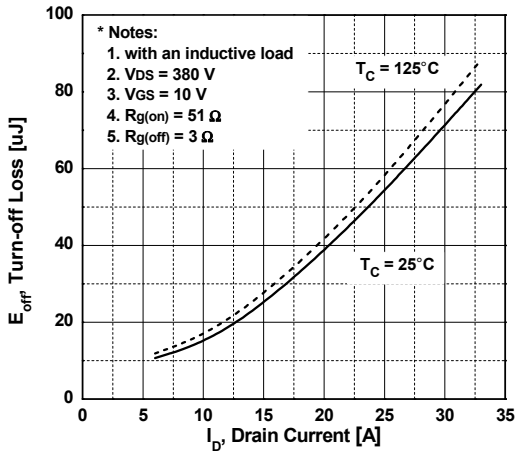

Fig 6. Turn-On Loss vs. Drain Current

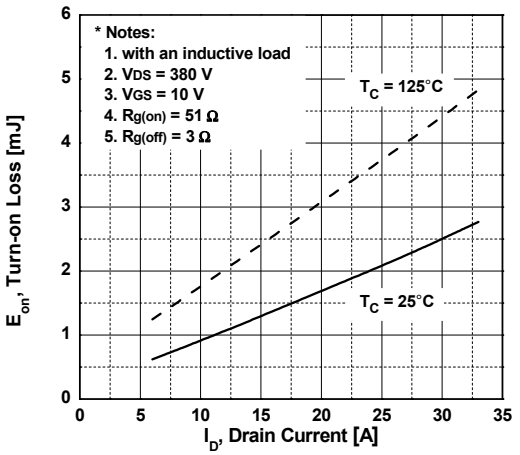

Typical Performance Characteristic (Continued)

Fig 7. Turn-Off Loss vs. Turn-Off Gate Resistor Values

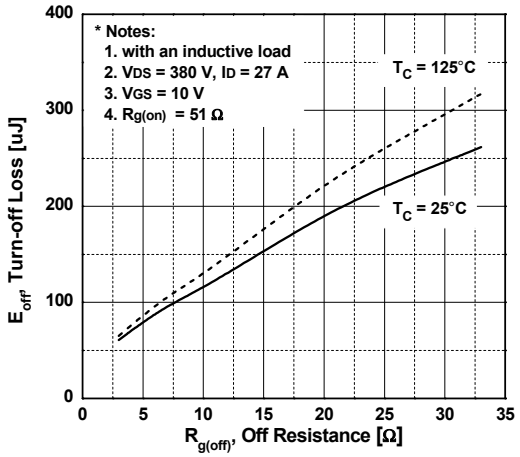

Fig 8. Transient Thermal Response Curve

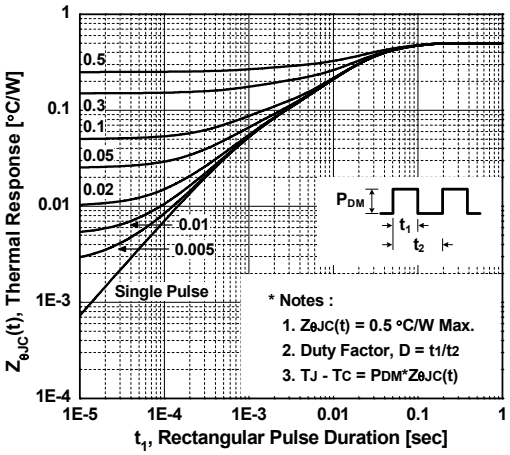

Fig 9. Typical NTC Value vs. Temperature

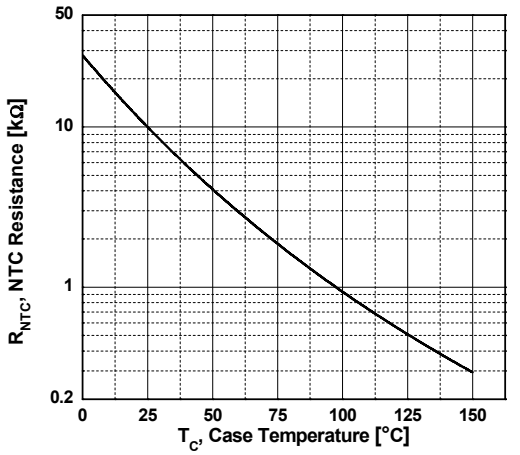

Internal Circuit Diagram

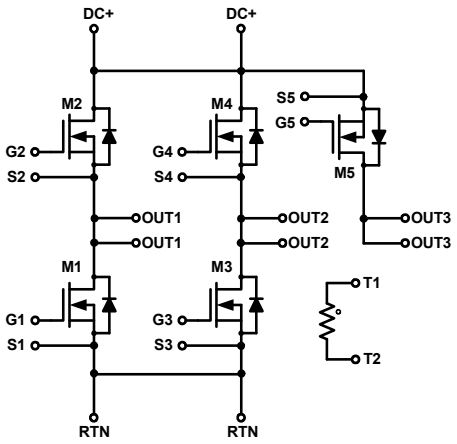

Package Outlines [mm]

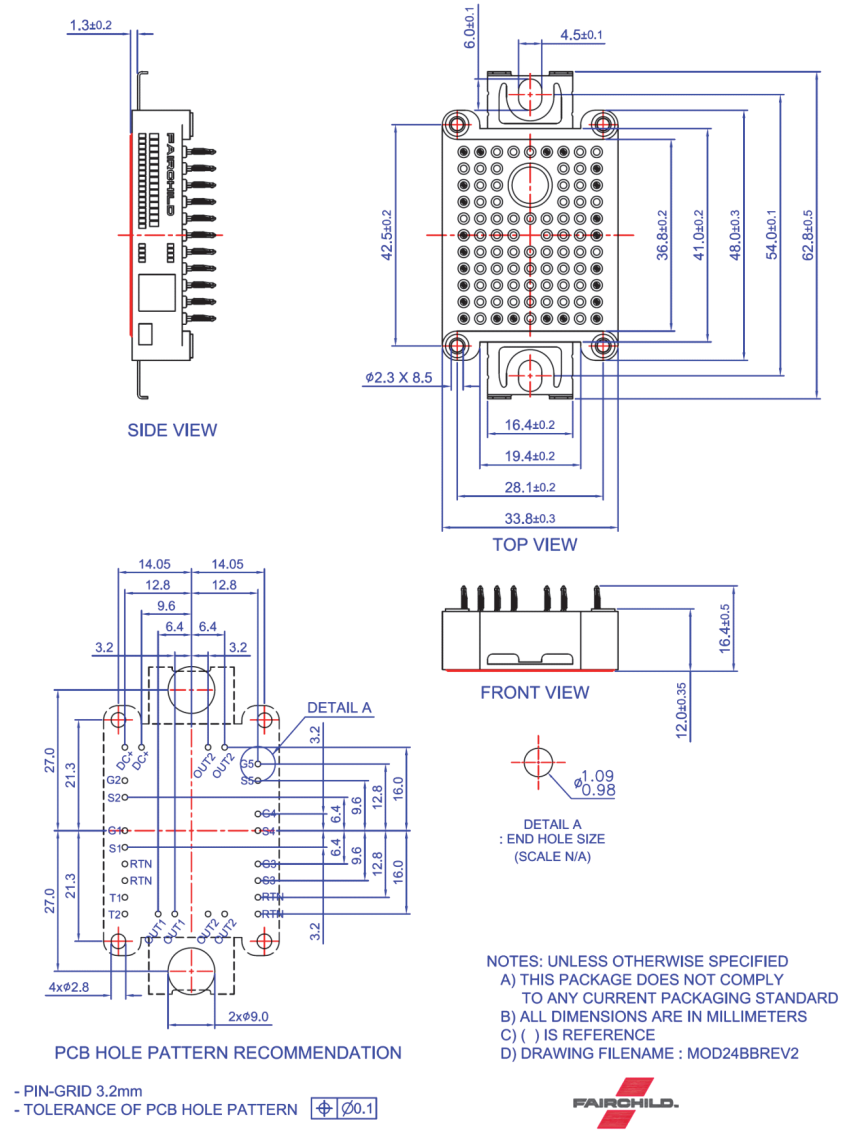

TRADEMARKS

The following includes registered and unregistered trademarks and service marks, owned by Fairchild Semiconductor and/or its global subsidiaries, and is not intended to be an exhaustive list of all such trademarks.

AccuPower™
AX-CAP®*
BitSiC™
Build it Now™
CorePLUS™
CorePOWER™
CROSSVOLT™
CTL™
Current Transfer Logic™
DEUXPEED®
Dual Cool™
EcoSPARK®
EfficientMax™
ESBC™
F®
Fairchild®
Fairchild Semiconductor®
FACT Quiet Series™
FACT®
FAST®
FastvCore™
FETBench™
FPS™
F-PFS™
FRFET®
Global Power Resource℠
GreenBridge™
Green FPS™
Green FPS™ e-Series™
Gmax™
GTO™
IntelliMAX™
ISOPLANAR™
Making Small Speakers Sound Louder and Better™
MegaBuck™
MICROCOUPLER™
MicroFET™
MicroPak™
MicroPak2™
MillerDrive™
MotionMax™
mWSaver®
OptoHiT™
OPTOLOGIC®
OPTOPLANAR®
®
PowerTrench®
PowerXS™
Programmable Active Droop™
QFET®
QS™
Quiet Series™
RapidConfigure™
™
Saving our world, 1mW/W/kW at a time™
SignalWise™
SmartMax™
SMART START™
Solutions for Your Success™
SPM®
STEALTH™
SuperFET®
SuperSOT™-3
SuperSOT™-6
SuperSOT™-8
SupreMOS®
SyncFET™
Sync-Lock™
SYSTEM GENERAL®*
TinyBoost®
TinyBuck®
TinyCalc™
TinyLogic®
TINYOPTO™
TinyPower™
TinyPWM™
TinyWire™
TranSiC™
TriFault Detect™
TRUECURRENT®*
μSerDes™
SerDes™
UHC®
Ultra FRFET™
UniFET™
VCX™
VisualMax™
VoltagePlus™
XS™

* Trademarks of System General Corporation, used under license by Fairchild Semiconductor.

DISCLAIMER

FAIRCHILD SEMICONDUCTOR RESERVES THE RIGHT TO MAKE CHANGES WITHOUT FURTHER NOTICE TO ANY PRODUCTS HEREIN TO IMPROVE RELIABILITY, FUNCTION, OR DESIGN. FAIRCHILD DOES NOT ASSUME ANY LIABILITY ARISING OUT OF THE APPLICATION OR USE OF ANY PRODUCT OR CIRCUIT DESCRIBED HEREIN; NEITHER DOES IT CONVEY ANY LICENSE UNDER ITS PATENT RIGHTS, NOR THE RIGHTS OF OTHERS. THESE SPECIFICATIONS DO NOT EXPAND THE TERMS OF FAIRCHILD'S WORLDWIDE TERMS AND CONDITIONS, SPECIFICALLY THE WARRANTY THEREIN, WHICH COVERS THESE PRODUCTS.

LIFE SUPPORT POLICY

FAIRCHILD'S PRODUCTS ARE NOT AUTHORIZED FOR USE AS CRITICAL COMPONENTS IN LIFE SUPPORT DEVICES OR SYSTEMS WITHOUT THE EXPRESS WRITTEN APPROVAL OF FAIRCHILD SEMICONDUCTOR CORPORATION.

As used herein:

1. Life support devices or systems are devices or systems which, (a) are intended for surgical implant into the body or (b) support or sustain life, and (c) whose failure to perform when properly used in accordance with instructions for use provided in the labeling, can be reasonably expected to result in a significant injury of the user.
2. A critical component in any component of a life support, device, or system whose failure to perform can be reasonably expected to cause the failure of the life support device or system, or to affect its safety or effectiveness.

ANTI-COUNTERFEITING POLICY

Fairchild Semiconductor Corporation's Anti-Counterfeiting Policy. Fairchild's Anti-Counterfeiting Policy is also stated on our external website, www.fairchildsemi.com, under Sales Support.

Counterfeiting of semiconductor parts is a growing problem in the industry. All manufacturers of semiconductor products are experiencing counterfeiting of their parts. Customers who inadvertently purchase counterfeit parts experience many problems such as loss of brand reputation, substandard performance, failed applications, and increased cost of production and manufacturing delays. Fairchild is taking strong measures to protect ourselves and our customers from the proliferation of counterfeit parts. Fairchild strongly encourages customers to purchase Fairchild parts either directly from Fairchild or from Authorized Fairchild Distributors who are listed by country on our web page cited above. Products customers buy either from Fairchild directly or from Authorized Fairchild Distributors are genuine parts, have full traceability, meet Fairchild's quality standards for handling and storage and provide access to Fairchild's full range of up-to-date technical and product information. Fairchild and our Authorized Distributors will stand behind all warranties and will appropriately address any warranty issues that may arise. Fairchild will not provide any warranty coverage or other assistance for parts bought from Unauthorized Sources. Fairchild is committed to combat this global problem and encourage our customers to do their part in stopping this practice by buying direct or from authorized distributors.

PRODUCT STATUS DEFINITIONS

Definition of Terms

Datasheet Identification	Product Status	Definition
Advance Information	Formative / In Design	Datasheet contains the design specifications for product development. Specifications may change in any manner without notice.
Preliminary	First Production	Datasheet contains preliminary data; supplementary data will be published at a later date. Fairchild Semiconductor reserves the right to make changes at any time without notice to improve design.
No Identification Needed	Full Production	Datasheet contains final specifications. Fairchild Semiconductor reserves the right to make changes at any time without notice to improve the design.
Obsolete	Not In Production	Datasheet contains specifications on a product that is discontinued by Fairchild Semiconductor. The datasheet is for reference information only.

Rev. I66

Общество с ограниченной ответственностью «МосЧип» ИНН 7719860671 / КПП 771901001
Адрес: 105318, г.Москва, ул.Щербаковская д.3, офис 1107

Данный компонент на территории Российской Федерации

Вы можете приобрести в компании MosChip.

Для оперативного оформления запроса Вам необходимо перейти по данной ссылке:

http://moschip.ru/get-element

Вы можете разместить у нас заказ для любого Вашего проекта, будь то серийное производство или разработка единичного прибора.

В нашем ассортименте представлены ведущие мировые производители активных и пассивных электронных компонентов.

Нашей специализацией является поставка электронной компонентной базы двойного назначения, продукции таких производителей как XILINX, Intel (ex.ALTERA), Vicor, Microchip, Texas Instruments, Analog Devices, Mini-Circuits, Amphenol, Glenair.

Сотрудничество с глобальными дистрибьюторами электронных компонентов, предоставляет возможность заказывать и получать с международных складов практически любой перечень компонентов в оптимальные для Вас сроки.

На всех этапах разработки и производства наши партнеры могут получить квалифицированную поддержку опытных инженеров.

Система менеджмента качества компании отвечает требованиям в соответствии с ГОСТ Р ИСО 9001, ГОСТ РВ 0015-002 и ЭС РД 009

Офис по работе с юридическими лицами:

105318, г.Москва, ул.Щербаковская д.3, офис 1107, 1118, ДЦ «Щербаковский»

Телефон: +7 495 668-12-70 (многоканальный)

Факс: +7 495 668-12-70 (доб.304)

E-mail: info@moschip.ru

Skype отдела продаж:
moschip.ru
moschip.ru_4
moschip.ru_6
moschip.ru_9