65V DUAL PNP SURFACE MOUNT SMALL SIGNAL TRANSISTOR

Description

This Bipolar Junction Transistor (BJT) is designed to meet the stringent requirements of Automotive Applications.

Features

- BV_{CEO} > -65V
- I_C = -100mA High Collector Current
- Complementary NPN Types Available (BC846AS)
- Ideally Suited for Automatic Insertion
- For Switching and AF Amplifier Applications
- **Totally Lead-Free & Fully RoHS Compliant (Notes 1 & 2)**
- **Halogen and Antimony Free. "Green" Device (Note 3)**
- **Qualified to AEC-Q101 Standards for High Reliability**
- **PPAP Capable (Note 4)**

Mechanical Data

- Case: SOT363
- Case Material: Molded Plastic, "Green" Molding Compound. UL Flammability Classification Rating 94V-0
- Moisture Sensitivity: Level 1 per J-STD-020
- Terminals: Finish – Matte Tin Finish. Solderable per MIL-STD-202, Method 208 e3
- Weight: 0.006 grams (Approximate)

SOT363

Top View

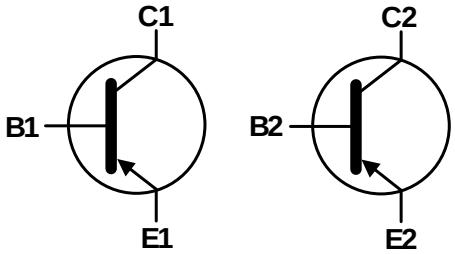

Device Symbol

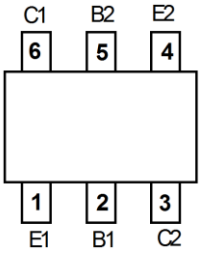

Top View
Pin-Out

Ordering Information (Notes 4 & 5)

Product	Compliance	Marking	Reel Size (inches)	Tape Width (mm)	Quantity per Reel
BC856ASQ-7-F	AEC-Q101	KPS	7	8	3,000

Notes:
1. No purposely added lead. Fully EU Directive 2002/95/EC (RoHS) & 2011/65/EU (RoHS 2) compliant.
2. See http://www.diodes.com/quality/lead_free.html for more information about Diodes Incorporated's definitions of Halogen- and Antimony-free, "Green" and Lead-free.
3. Halogen- and Antimony-free "Green" products are defined as those which contain <900ppm bromine, <900ppm chlorine (<1500ppm total Br + Cl) and <1000ppm antimony compounds.
4. Automotive products are AEC-Q101 qualified and are PPAP capable. Refer to http://www.diodes.com/quality/product_compliance_definitions/.
5. For packaging details, go to our website at http://www.diodes.com/products/packages.html.

Marking Information

SOT363

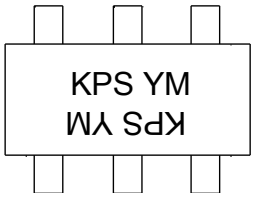

KPS = Product Type Marking Code
YM = Date Code Marking
Y = Year (ex: D = 2016)
M = Month (ex: 9 = September)

Date Code Key

Year	2015	2016	2017	2018	2019	2020	2021	2022
Code	C	D	E	F	G	H	I	J

Month	Jan	Feb	Mar	Apr	May	Jun	Jul	Aug	Sep	Oct	Nov	Dec
Code	1	2	3	4	5	6	7	8	9	O	N	D

© Diodes Incorporated

Absolute Maximum Ratings (@T_A = 25°C unless otherwise specified)

Characteristic	Symbol	Value	Unit
Collector – Base Voltage	V_{CBO}	-80	V
Collector – Emitter Voltage	V_{CEO}	-65	V
Emitter – Base Voltage	V_{EBO}	-5.0	V
Collector Current	I_C	-100	mA
Peak Collector Current	I_{CM}	-200	mA
Peak Emitter Current	I_{EM}	-200	mA

Thermal Characteristics (@T_A = +25°C unless otherwise specified.)

Characteristic	Symbol	Value	Unit
Power Dissipation (Note 6)	P_D	200	mW
Thermal Resistance, Junction to Ambient Air (Note 6)	$R_{\theta JA}$	625	°C/W
Operating and Storage Temperature Range	T_J, T_{STG}	-55 to +150	°C

Electrical Characteristics (Note 7) (@T_A = +25°C unless otherwise specified.)

Characteristic	Symbol	Min	Typ	Max	Unit	Test Condition
Collector – Base Breakdown Voltage	BV_{CBO}	-80	—	—	V	I_C = 10µA
Collector – Emitter Breakdown Voltage	BV_{CEO}	-65	—	—	V	I_C = 10mA
Emitter – Base Breakdown Voltage	BV_{EBO}	-5	—	—	V	I_E = 1µA
DC Current Gain	h_{FE}	125	180	250	—	V_{CE} = -5.0V, I_C = -2.0mA
Collector – Emitter Saturation Voltage	$V_{CE(SAT)}$	—	-75 -250	-300 -650	mV	I_C = -10mA, I_B = -0.5mA I_C = -100mA, I_B = -5.0mA
Base – Emitter Saturation Voltage	$V_{BE(SAT)}$	— —	-700 -850	—	mV	I_C = -10mA, I_B = -0.5mA I_C = -100mA, I_B = -5.0mA
Base – Emitter Voltage	$V_{BE(ON)}$	-600 —	-650 —	-750 -820	mV	V_{CE} = -5.0V, I_C = -2.0mA V_{CE} = -5.0V, I_C = -10mA
Collector – Cutoff Current	I_{CES} I_{CBO} I_{CBO}	— — —	— — —	-15 -15 -4.0	nA nA µA	V_{CE} = -80V V_{CB} = -30V V_{CB} = -30V, T_A = +150°C
Gain Bandwidth Product	f_T	100	—	—	MHz	V_{CE} = -5.0V, I_C = -10mA, f = 100MHz
Collector – Base Capacitance	C_{CB}	—	3	—	pF	V_{CB} = -10V, f = 1.0MHz

Notes: 6. For the device mounted on minimum recommended pad layout FR4 PCB with high coverage of single sided 1oz copper, in still air conditions; the device is measured when operating in a steady-state condition.
7. Short duration pulse test used to minimize self-heating effect.

.

© Diodes Incorporated

Typical Electrical Characteristics (@T_A = +25°C unless otherwise specified.)

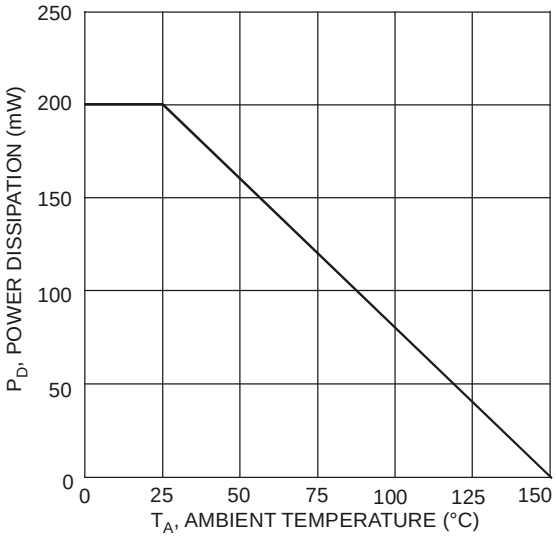

Fig. 1 Power Derating Curve

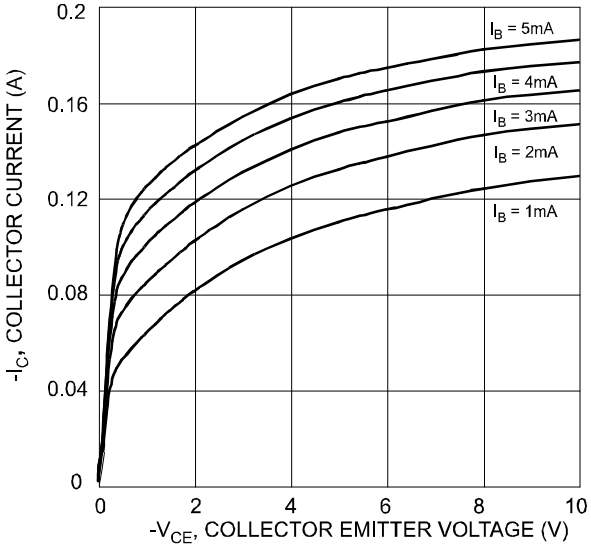

Fig. 2 Typical Collector Current vs. Collector Emitter Voltage

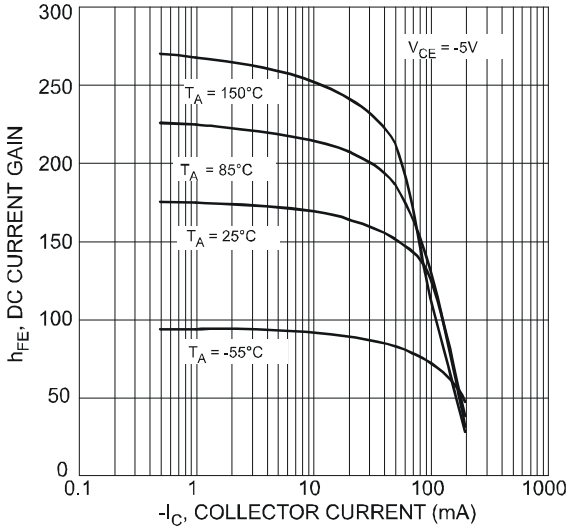

Fig. 3 Typical DC Current Gain vs. Collector Current

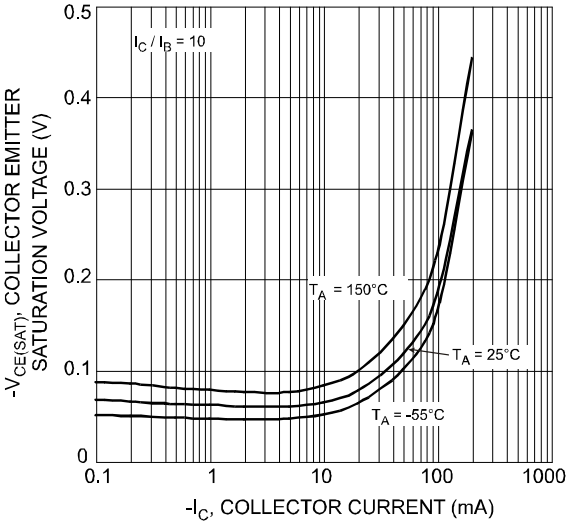

Fig. 4 Typical Collector Emitter Saturation Voltage vs. Collector Current

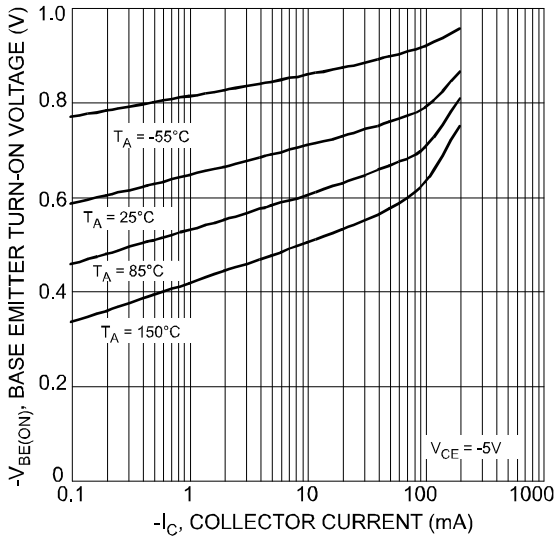

Fig. 5 Typical Base Emitter Turn-On Voltage vs. Collector Current

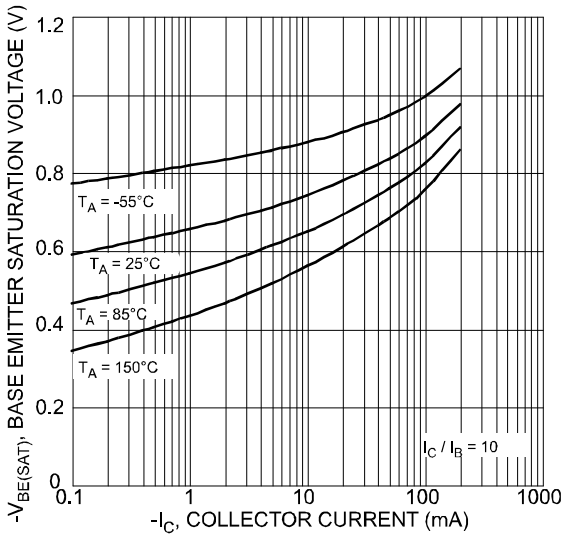

Fig. 6 Typical Base Emitter Saturation Voltage vs. Collector Current

© Diodes Incorporated

Typical Electrical Characteristics (Continued) (@T_A = +25°C unless otherwise specified.)

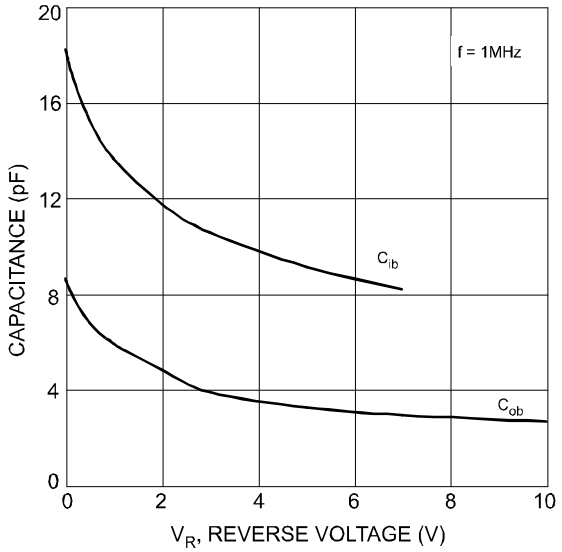

Fig. 7 Typical Capacitance Characteristics

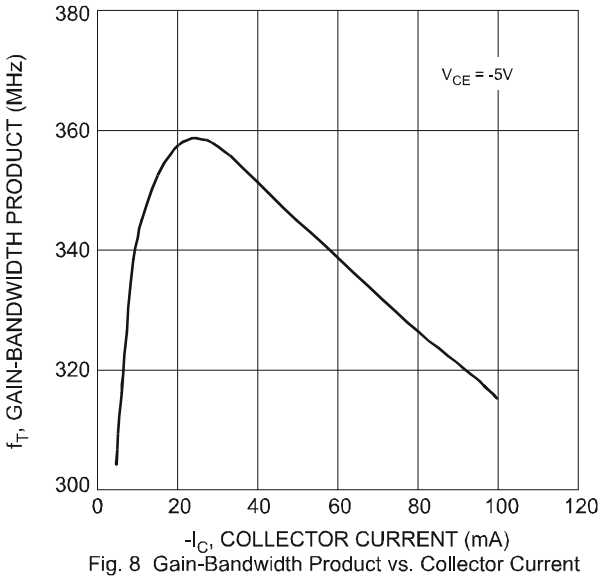

Fig. 8 Gain-Bandwidth Product vs. Collector Current

© Diodes Incorporated

Package Outline Dimensions

Please see http://www.diodes.com/package-outlines.html for the latest version.

SOT363

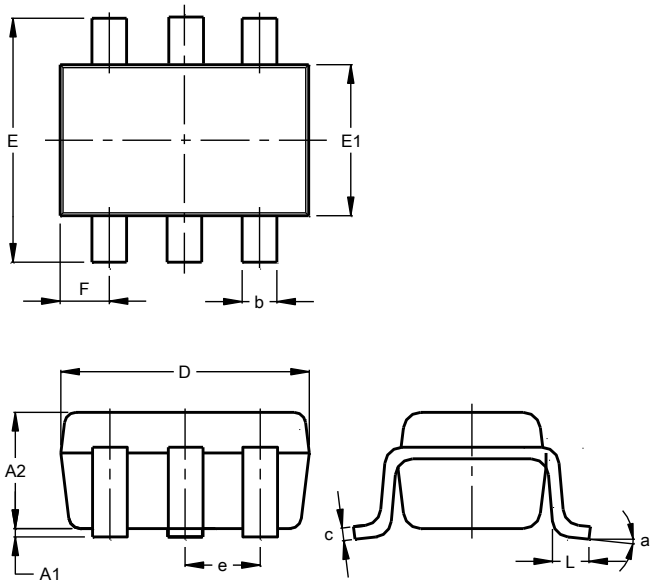

SOT363			
Dim	**Min**	**Max**	**Typ**
A1	0.00	0.10	0.05
A2	0.90	1.00	1.00
b	0.10	0.30	0.25
c	0.10	0.22	0.11
D	1.80	2.20	2.15
E	2.00	2.20	2.10
E1	1.15	1.35	1.30
e	0.650 BSC		
F	0.40	0.45	0.425
L	0.25	0.40	0.30
a	0°	8°	--
All Dimensions in mm			

Suggested Pad Layout

Please see http://www.diodes.com/package-outlines.html for the latest version.

SOT363

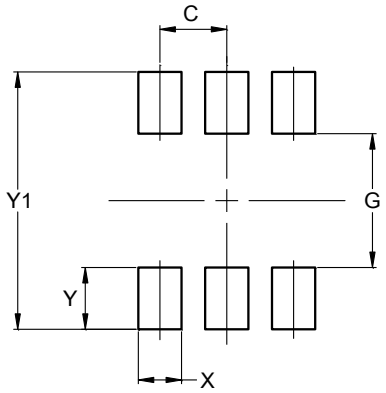

Dimensions	Value (in mm)
C	0.650
G	1.300
X	0.420
Y	0.600
Y1	2.500

© Diodes Incorporated

IMPORTANT NOTICE

DIODES INCORPORATED MAKES NO WARRANTY OF ANY KIND, EXPRESS OR IMPLIED, WITH REGARDS TO THIS DOCUMENT, INCLUDING, BUT NOT LIMITED TO, THE IMPLIED WARRANTIES OF MERCHANTABILITY AND FITNESS FOR A PARTICULAR PURPOSE (AND THEIR EQUIVALENTS UNDER THE LAWS OF ANY JURISDICTION).

Diodes Incorporated and its subsidiaries reserve the right to make modifications, enhancements, improvements, corrections or other changes without further notice to this document and any product described herein. Diodes Incorporated does not assume any liability arising out of the application or use of this document or any product described herein; neither does Diodes Incorporated convey any license under its patent or trademark rights, nor the rights of others. Any Customer or user of this document or products described herein in such applications shall assume all risks of such use and will agree to hold Diodes Incorporated and all the companies whose products are represented on Diodes Incorporated website, harmless against all damages.

Diodes Incorporated does not warrant or accept any liability whatsoever in respect of any products purchased through unauthorized sales channel. Should Customers purchase or use Diodes Incorporated products for any unintended or unauthorized application, Customers shall indemnify and hold Diodes Incorporated and its representatives harmless against all claims, damages, expenses, and attorney fees arising out of, directly or indirectly, any claim of personal injury or death associated with such unintended or unauthorized application.

Products described herein may be covered by one or more United States, international or foreign patents pending. Product names and markings noted herein may also be covered by one or more United States, international or foreign trademarks.

This document is written in English but may be translated into multiple languages for reference. Only the English version of this document is the final and determinative format released by Diodes Incorporated.

LIFE SUPPORT

Diodes Incorporated products are specifically not authorized for use as critical components in life support devices or systems without the express written approval of the Chief Executive Officer of Diodes Incorporated. As used herein:

A. Life support devices or systems are devices or systems which:

1. are intended to implant into the body, or
2. support or sustain life and whose failure to perform when properly used in accordance with instructions for use provided in the labeling can be reasonably expected to result in significant injury to the user.

B. A critical component is any component in a life support device or system whose failure to perform can be reasonably expected to cause the failure of the life support device or to affect its safety or effectiveness.

Customers represent that they have all necessary expertise in the safety and regulatory ramifications of their life support devices or systems, and acknowledge and agree that they are solely responsible for all legal, regulatory and safety-related requirements concerning their products and any use of Diodes Incorporated products in such safety-critical, life support devices or systems, notwithstanding any devices- or systems-related information or support that may be provided by Diodes Incorporated. Further, Customers must fully indemnify Diodes Incorporated and its representatives against any damages arising out of the use of Diodes Incorporated products in such safety-critical, life support devices or systems.

Copyright © 2016, Diodes Incorporated

www.diodes.com

Общество с ограниченной ответственностью «МосЧип» ИНН 7719860671 / КПП 771901001
Адрес: 105318, г.Москва, ул.Щербаковская д.3, офис 1107

Данный компонент на территории Российской Федерации

Вы можете приобрести в компании MosChip.

Для оперативного оформления запроса Вам необходимо перейти по данной ссылке:

http://moschip.ru/get-element

Вы можете разместить у нас заказ для любого Вашего проекта, будь то серийное производство или разработка единичного прибора.

В нашем ассортименте представлены ведущие мировые производители активных и пассивных электронных компонентов.

Нашей специализацией является поставка электронной компонентной базы двойного назначения, продукции таких производителей как XILINX, Intel (ex.ALTERA), Vicor, Microchip, Texas Instruments, Analog Devices, Mini-Circuits, Amphenol, Glenair.

Сотрудничество с глобальными дистрибьюторами электронных компонентов, предоставляет возможность заказывать и получать с международных складов практически любой перечень компонентов в оптимальные для Вас сроки.

На всех этапах разработки и производства наши партнеры могут получить квалифицированную поддержку опытных инженеров.

Система менеджмента качества компании отвечает требованиям в соответствии с ГОСТ Р ИСО 9001, ГОСТ РВ 0015-002 и ЭС РД 009

Офис по работе с юридическими лицами:

105318, г.Москва, ул.Щербаковская д.3, офис 1107, 1118, ДЦ «Щербаковский»

Телефон: +7 495 668-12-70 (многоканальный)

Факс: +7 495 668-12-70 (доб.304)

E-mail: info@moschip.ru

Skype отдела продаж:
moschip.ru
moschip.ru_4
moschip.ru_6
moschip.ru_9